LIBRARY
SUPREME COURT, U. S.

TRANSCRIPT OF RECORD

SUPREME COURT OF THE UNITED STATES

OCTOBER TERM, 1964

No. 8

UNITED STATES, APPELLANT,

vs.

HUCK MANUFACTURING COMPANY, ET AL.

APPEAL FROM THE UNITED STATES DISTRICT COURT FOR THE EASTERN DISTRICT OF MICHIGAN

FILED SEPTEMBER 25, 1964
PROBABLE JURISDICTION NOTED JANUARY 18, 1965

SUPREME COURT OF THE UNITED STATES

OCTOBER TERM, 1964

No. 538

UNITED STATES, APPELLANT,

vs.

HUCK MANUFACTURING COMPANY, ET AL.

APPEAL FROM THE UNITED STATES DISTRICT COURT FOR THE EASTERN DISTRICT OF MICHIGAN

INDEX

	Original	Print
Record from the United States District Court for the Eastern District of Michigan		
Complaint	a	1
Appendices A and B—Illustrations of "Standard Commercial Lockbolt Types and How They Work"	h	7
Answer of defendant Huck Manufacturing Company	j	9
Answer of defendant Townsend Company	p	13
Order and Stipulation of April 2, 1963 Re: Placing in evidence the entire record in the case of *United States* v. *Huck Manufacturing Company, et al.*, (Criminal Action # 39017, E.D. Mich.)	t	16
Transcript of proceedings in the case of *United States* v. *Huck Manufacturing Company, et al.* (Criminal Action # 39017) (excerpts), February 26, 27, 28 and March 1, 5, 6 and 7, 1963	1	18
Appearances	1	18
Testimony of Robert Looker—direct (by Mr. Lipson)	130	19
Offers in evidence	153	33
Testimony of Robert Looker—direct (by Mr. Lipson continuing)	168	39
Offers in evidence	237	82

	Original	Print
Record from the United States District Court for the Eastern District of Michigan—Continued		
Transcript of proceedings in the case of *United States* v. *Huck Manufacturing Company, et al.* (Criminal Action # 39017) (excerpts), February 26, 27, 28 and March 1, 5, 6 and 7, 1963—Continued		
Testimony of Robert Looker—direct (by Mr. Lipson continuing)	246	84
Offers in evidence	265	95
Testimony of Robert Looker—direct (by Mr. Lipson continuing)	270	95
Offers in evidence and objections thereto	295	109
Testimony of Robert Looker		
—cross (by Mr. Haggerty)	477	169
—cross (by Mr. Pomeroy)	671	287
—redirect (by Mr. Lipson)	706	309
Testimony of Robert E. Byrnes—direct (by Mr. Lipson)	730	320
Reoffer of certain exhibits	735	324
Testimony of Robert E. Byrnes—cross (by Mr. Dickey)	736	324
Testimony of George Q. Mathews		
—direct (by Mr. Lipson)	743	328
—cross (by Mr. Haggerty)	819	363
—cross (by Mr. Pomeroy)	825	367
Testimony of Elvert Hugh Stau		
—direct (by Mr. Lipson)	853	383
—cross (by Mr. Pomeroy)	890	403
—cross (by Mr. Dickey)	894	405
Testimony of John H. Roy		
—direct (by Mr. Lipson)	896	407
—cross (by Mr. Pomeroy)	911	416
—redirect (by Mr. Lipson)	942	435
Testimony of John H. Roy—cross (continued by Mr. Pomeroy)	949	439
Offers in evidence	957	444
The Government rests	967	448
GOVERNMENT'S EXHIBITS		
No. 1—Drawing of Lockbolt pin	1047	449
No. 2—Drawing of Lockbolt Driving Cycle	1048	450
No. 3—Drawing of Lockbolt Installed	1049	451
No. 8—Photograph #1—Lock Bolts in Drilled Holes	1050	455
No. 10—Photograph #3—Bolts with Lockbolt Collars	1052	457
No. 11—Photograph #4—Swadging Collars on Bolts	1054	459
No. 13—Photograph #6—Installation of Lockbolts in Wing Section	1056	461

	Original	Print
Record from the United States District Court for the Eastern District of Michigan—Continued		
Transcript of proceedings in the case of *United States* v. *Huck Manufacturing Company, et al.* (Criminal Action # 39017) (excerpts), February 26, 27, 28 and March 1, 5, 6 and 7, 1963—Continued		
GOVERNMENT'S EXHIBITS—Continued		
No. 14—Photograph #7—Rear Beam—Center Wing Section	1058	463
No. 15—Photograph #8—Center Wing Section—Front Beam Showing	1060	465
No. 16—Photograph #9—Center Wing Section	1062	467
No. 17—Agreement between Huck Manufacturing Company and Townsend Company, dated September 14, 1954—Lockbolt License	1064	469
No. 18—Stipulation of testimony by H. E. Young as to authenticity, dated February, 26, 1963	1072	475
No. 19—Agreement between Huck Manufacturing Company and Townsend Company, dated November 1, 1955—Lockbolt stumps, etc., with Exhibits A, B, C, D and E attached	1073	476
No. 20—Stipulation of testimony by Dante C. Fabiani as to authenticity	1096	497
No. 24—Robert Looker, Huck Manufacturing Company, Sales Engineering Report to Consolidated Vultee Corp., dated September 4, 5, 6, 7, 1951	1098	498
No. 25—Notice of Appeal in Civil Action, No. 13,689-T, Huck v. Townsend filed May 27, 1953	1100	501
No. 26—Robert Looker, Huck Manufacturing Company, Departmental Correspondence, dated February 3, 1953 to Armour, Benkert, et al., Subject: Request for Lockbolt license—The Townsend Company	1101	502
No. 27—R. Looker Memorandum: Factors relating to the establishment of a Second Source for Huckbolt Manufacture by License Agreement, dated May 4, 1954 with attachments:	1102	503

Record from the United States District Court for the Eastern District of Michigan—Continued
Transcript of proceedings in the case of *United States v. Huck Manufacturing Company, et al.* (Criminal Action # 39017) (excerpts), February 26, 27, 28 and March 1, 5, 6 and 7, 1963—Continued
GOVERNMENT'S EXHIBITS—Continued

	Original	Print
Letter from John C. Sterritt to A. W. Armour, III, dated April 11, 1951, Re: Proposed Lockbolt License to Townsend	1105	509
Letter from John C. Sterritt to Louis C. Huck, dated February 21, 1951 with attached memorandum, "Huck Lockbolt Patent Coverage"	1109	513
No. 28—R. Looker, Huck Manufacturing Company, Departmental Correspondence, dated May 5, 1954 to A. W. Armour, Subject: Discussion on Lockbolt Patent License	1118	521
No. 30—R. Looker, Huck Manufacturing Company, Departmental Correspondence, dated June 23, 1954 to A. W. Armour and A. E. Benkert, Subject: Townsend Company	1119	523
No. 33—Stipulation to dismiss filed in Townsend Company v. Huck Manufacturing Company, No. 13943, dated September 17, 1954 and Clerk of U.S.C.A. for the 9th Circuit certificate that cause was entered dismissed on September 20, 1954	1120	524
No. 34—Letter from Robert Looker, Huck Manufacturing Company, to Paul Horst, The Townsend Company, dated April 20, 1956—Prices to BuAir for overseas packing	1122	525
No. 34A—Mr. A. Watson Armour's copy of above letter	1123	526
No. 35—Letter from Robert Looker, Huck Manufacturing Company, to Mr. Paul Horst, dated May 9, 1956—Aircraft companies electrofilm problem and List of Huckbolt 2024 Collar Prices effective April 9, 1956	1124	528

	Original	Print
Record from the United States District Court for the Eastern District of Michigan—Continued		
Transcript of proceedings in the case of *United States* v. *Huck Manufacturing Company, et al.* (Criminal Action # 39017) (excerpts), February 26, 27, 28 and March 1, 5, 6 and 7, 1963—Continued		
GOVERNMENT'S EXHIBITS—Continued		
No. 36—Robert Looker, Huck Manufacturing Company, Departmental Correspondence, dated May 11, 1956 to Mr. Westrick, Subject: Lockheed, Marietta—Your memo of May 10, 1956 which is attached	1126	530
No. 37—Robert Looker, Huck Manufacturing Company, Departmental Correspondence, dated May 21, 1956 to DeLoach, Subject: Lockheed, Marietta—Your May 9, 1956 Contact Report	1129	533
No. 38—Letter from Robert Looker, Huck Manufacturing Company to Mr. Paul Horst, dated July 3, 1956—Prepaid premium shipments	1131	535
No. 39—Robert Looker, Huck Manufacturing Company, Departmental Correspondence dated July 3, 1956 to Frank DeLoach, Subject: Lockheed, Marietta—Your Memo of June 16, 1956	1132	536
No. 40—Letter from Robert Looker, Huck Manufacturing Company to Mr. Paul Horst, dated July 3, 1956—Grouping of non-standard Huckbolts	1133	537
No. 41—Robert Looker, Huck Manufacturing Company, Departmental Correspondence dated December 12, 1955 to Mr. A. E. Benkert, Subject: Freight Equalization	1134	538
No. 42—Letter from Robert Looker to Mr. H. E. Chilcoat, Cherry Rivet Division, dated December 27, 1955—Price Maintenance	1135	539
No. 43—Letter from H. E. Chilcoat to Mr. Robert Looker, dated January 20, 1956 — Standard parts — prices — stocking	1137	541

	Original	Print
Record from the United States District Court for the Eastern District of Michigan—Continued		
Transcript of proceedings in the case of *United States v. Huck Manufacturing Company, et al.* (Criminal Action # 39017) (excerpts), February 26, 27, 28 and March 1, 5, 6 and 7, 1963—Continued		
GOVERNMENT'S EXHIBITS—Continued		
No. 44—Robert Looker, Huck Manufacturing Company, Departmental Correspondence, dated December 27, 1955 to Mr. Armour, Subject: Freight Equalization with the Townsend Company	1139	542
No. 45—Robert Looker, Huck Manufacturing Company, Departmental Correspondence, dated March 1, 1956 to Mr. Armour, Subject: Visit From The Townsend Company—Mr. Paul Horst and Mr. George Bentley	1140	543
No. 47—Robert Looker, Huck Manufacturing Company, Departmental Correspondence dated April 4, 1956 to Mr. Benkert, Subject: Trip Itinerary	1141	544
No. 48—R. Looker, Huck Manufacturing Company, Departmental Correspondence dated October 15, 1954 to Mr. A. W. Armour, Subject: Townsend Company — Conference of October 14	1142	545
No. 50—M. E. Welch, Jr., Huck Manufacturing Company, Departmental Correspondence dated February 15, 1955 to All Product Engineers, Subject: AL-ALS Price Increase with specimen letter from Robert Looker to All Customers, dated February 10, 1955	1143	546
No. 51—M. E. Welsh, Jr., Huck Manufacturing Company, Departmental Correspondence dated March 25, 1955 to All Product Engineers, Subject: Commercial Huckbolt Price Increase Effective April 1, 1955 with letter from Robert Looker, dated March 30, 1955	1145	548

	Original	Print
Record from the United States District Court for the Eastern District of Michigan—Continued		
Transcript of proceedings in the case of *United States v. Huck Manufacturing Company, et al.* (Criminal Action # 39017) (excerpts), February 26, 27, 28 and March 1, 5, 6 and 7, 1963—Continued		
GOVERNMENT'S EXHIBITS—Continued		
No. 52—Robert Looker, Huck Manufacturing Company, Departmental Correspondence dated October 3, 1955 to All Engineering Representatives, Subject: Price Increase	1148	551
No. 53—Robert Looker, Huck Manufacturing Company, Departmental Correspondence dated April 6, 1956 to All Engineering Representatives, Subject: Price Increases	1150	553
No. 55—Letter from Huck Manufacturing Company to "To Our Customers," dated April 6, 1956, Subject: Price Changes	1152	555
No. 56—Robert Looker, Huck Manufacturing Company, Departmental Correspondence dated August 31, 1955 to Mr. A. W. Armour, Subject: FOB Los Angeles, California	1153	556
No. 59—Robert Looker, Huck Manufacturing Company, Departmental Correspondence dated May 25, 1956 to Mr. Armour, Subject: Pheoll Lockbolt Type Fasteners	1155	558
No. 60—Letter from Robert Looker, Brown-Line Corporation to Mr. Armour, dated July 13, 1956—Request for license for Brown-Line	1156	559
No. 61—Letter from R. Looker, Brown-Line Corporation to Mr. John C. Sterritt, dated October 23, 1959—Department of Justice investigation and L/B license	1157	560
No. 63—Letter from R. Looker, Brown-Line Corporation to John C. Sterritt, dated December 3, 1959—Change patent numbers	1158	561
No. 64—Letter from R. Looker, Brown-Line Corporation to John C. Sterritt, dated November 9, 1959—Request for license	1159	562

Record from the United States District Court for the Eastern District of Michigan—Continued
Transcript of proceedings in the case of *United States* v. *Huck Manufacturing Company, et al.* (Criminal Action # 39017) (excerpts), February 26, 27, 28 and March 1, 5, 6 and 7, 1963—Continued

	Original	Print
GOVERNMENT'S EXHIBITS—Continued		
No. 65—Letter from R. Looker, Brown-Line Corporation, to John C. Sterritt, dated March 2, 1960—Request for license	1160	563
No. 66—Letter from S. R. Maness, Olympic Screw & Rivet Corporation to Robert Looker, Huck Manufacturing Company, dated September 27, 1954—Request for license	1161	564
No. 68—Letter from Robert Looker to Mr. S. R. Maness, dated September 29, 1954—re L/B license	1162	565
No. 69—Robert Looker, Huck Manufacturing Company, Departmental Correspondence dated May 11, 1953, Subject: Meeting May 11, 1953	1163	566
No. 70—Agreement between Huck Manufacturing Company and Townsend Company, dated October 22, 1958—Cross license agreement—Install tool with Exhibits A and B attached	1164	567
No. 71—Sales Agreement between Huck Manufacturing Company and Townsend Company, dated October 22, 1958 with Schedule 1 and Supplement to Sales Agreement attached	1177	579
No. 72—Agreement between Huck Manufacturing Company and Townsend Company, dated June 25, 1958—Blind Lockbolt license with Exhibit A attached	1182	584
No. 74—Letter from A. W. Armour to F. R. Dickenson, dated July 9, 1954—Personal understanding of Armour/Dickenson	1189	591
No. 76—Agreement between Huck Manufacturing Company and Pheoll Manufacturing Company, dated September 26, 1956 and amendment, dated May 18, 1960—Titanium L/B with	1192	593

	Original	Print
Record from the United States District Court for the Eastern District of Michigan—Continued		
Transcript of proceedings in the case of *United States* v. *Huck Manufacturing Company, et al.* (Criminal Action # 39017) (excerpts), February 26, 27, 28 and March 1, 5, 6 and 7, 1963—Continued		
GOVERNMENT'S EXHIBITS—Continued		
No. 77—Agreement between Huck Manufacturing and Standard Pressed Steel Company, dated October 4, 1956—Titanium L/B with Exhibits 1 and 2 attached	1202	603
No. 78—Letter from Silas S. Catheart to Mr. A. Watson Armour, III, dated November 6, 1959	1212	611
No. 79—Telephone Confirmation record of call from Townsend Company, New Brighton, Pa., Mr. Paul Horst, April 21, 1959 by A. E. Benkert	1213	612
No. 80—Statement of Total Annual Sales for Lockbolts and Blind Rivets in the U.S.A. and the Foreign Market, January 1, 1950—September 14, 1960	1215	614
No. 82—Letter from George Q. Mathews to Mr. F. R. Dickenson, dated July 23, 1956—Non-standard and special L/B cooperation	1216	615
No. 83—George Q. Mathews, Huck Manufacturing Company, Departmental Correspondence dated September 14, 1956 to Mr. A. E. Benkert—Townsend price changes	1217	616
No. 84—Proposed Letter to All Huck Customers, dated September 14, 1956	1218	617
No. 85—George Q. Mathews, Huck Manufacturing Company, Departmental Correspondence dated September 25, 1956 to All Engineering Representatives, Subject: Price Adjustment-Pricing Policy—Effective October 1, 1956	1219	618
No. 86—Letter from Huck Manufacturing Company to "To Our Customers", dated September 25, 1956, Subject: Price Adjustment	1221	621

	Original	Print
Record from the United States District Court for the Eastern District of Michigan—Continued		
Transcript of proceedings in the case of *United States v. Huck Manufacturing Company, et al.* (Criminal Action # 39017) (excerpts), February 26, 27, 28 and March 1, 5, 6 and 7, 1963—Continued		
GOVERNMENT'S EXHIBITS—Continued		
No. 87—Huck Manufacturing Company, Departmental Correspondence, to "All Engineering Representatives", dated September 10, 1957, Subject: Price Adjustment Letter To Customers of August 30, 1957 with letter from Huck Manufacturing Company to "To Our Customers", dated August 30, 1957	1222	622
No. 88—Memorandum from A. E. Benkert to A. W. Armour, dated November 7, 1956, Subject: Price Lists for Licensees	1224	624
No. 89—Letter from H. C. Braund to Townsend Company, dated January 14, 1957—sending requested price lists	1225	625
No. 90—H. C. Braund, Huck Manufacturing Company, Departmental Correspondence dated April 19, 1957 to A. E. Benkert, Subject: Price Lists for Commercial Huckbolt Pins	1226	626
No. 91—Letter from H. C. Braund to Mr. Paul Horst, dated October 30, 1957—enclosing prices	1227	627
No. 92—Letter from George Q. Mathews to Olympic Screw & Rivet Corporation, dated July 19, 1957—no additional licensees	1228	628
No. 93—Letter from George Q. Mathews to Lockheed Aircraft Corporation, dated March 7, 1958 with letter from George Q. Mathews to Lockheed Aircraft Corporation, California Division, dated March 7, 1958—Terms and Conditions of Purchase	1229	629
No. 94—Letter from Bill Hubbard to Mr. A. Watson Armour, Jr., dated July 29, 1950—getting into production of L/B	1231	631
No. 95—Minutes of the Patent Committee Meeting of March 29, 1951 by Chairman, M. C. Ketchum	1232	632

	Original	Print
Record from the United States District Court for the Eastern District of Michigan—Continued		
Transcript of proceedings in the case of *United States* v. *Huck Manufacturing Company, et al.* (Criminal Action # 39017) (excerpts), February 26, 27, 28 and March 1, 5, 6 and 7, 1963—Continued		
GOVERNMENT'S EXHIBITS—Continued		
No. 98—Letter from E. H. Stau to Mr. George Q. Mathews, dated July 11, 1957—request for L/B license	1237	636
No. 99—Townsend Company, Cherry Rivet Division Memorandum to E. B. Buster from John H. Roy, dated January 19, 1959, Subject: Lockbolt "Standards"	1238	638
No. 100—Townsend Company, Cherry Rivet Division Memorandum to P. E. Horst from E. B. Buster, dated January 22, 1959, Subject: Lockbolt Standards	1240	640
No. 101—Townsend Company, Cherry Rivet Division Memorandum to "Those Listed", dated February 9, 1959, Subject: Lockbolt Pricing and Standards	1241	641
No. 103—Statement of Townsend Company, Sales of Lockbolts, September 1, 1954 to August 31, 1961	1243	643
No. 104—Memorandum to "Those Listed Below" from P. E. Horst, dated February 10, 1956, Subject: Report on Visit to Huck Manufacturing Company, February 7, 1956 by G. A. Bentley and P. E. Horst	1244	643
No. 105—Townsend Company, Cherry Rivet Division Memorandum to H. E. Chilcoat from E. B. Buster, dated August 29, 1957, Subject: Price Changes on Lockbolts	1247	646
No. 106—Letter from Paul E. Horst to A. E. Benkert, dated December 30, 1957—Townsend prices and terms	1248	647
No. 107—Townsend Company Memorandum from W. R. Wyckoff to P. E. Horst, dated April 24, 1958, Subject: Lockbolt meeting, April 23, 1958	1249	648

Record from the United States District Court for the Eastern District of Michigan—Continued
Transcript of proceedings in the case of *United States* v. *Huck Manufacturing Company, et al.* (Criminal Action # 39017) (excerpts), February 26, 27, 28 and March 1, 5, 6 and 7, 1963—Continued
DEFENDANTS' EXHIBITS

	Original	Print
No. E—Letter from R. Looker, Brown-Line Corporation to Huck Manufacturing Company, dated October 10, 1958 with enclosed drawing	1251	650
No. F—Letter from William H. Pavitt, Jr., Smyth & Roston to Charles L. Beckler, U.S. Department of Justice, dated November 7, 1958	1256	657
No. G—Letter from A. Watson Armour, III, Huck Manufacturing Company to Robert Looker, Brown-Line Corporation, dated July 18, 1956—reply to request for license	1258	659
No. H—Reply letter from Robert Looker, Brown-Line Corporation to A. Watson Armour, III, Huck Manufacturing Company	1259	659
No. K—Letter from Thomas R. Boyd to Robert Looker, Brown-Line Corporation, dated September 10, 1957, Subject: Locker Commercial Lock Bolt	1260	660
No. L—Letter from R. Looker, Brown-Line Corporation to Mr. John S. Hawley, dated November 27, 1957—Patent domination/opinion of Looker counsel	1261	661
No. N—Letter from John Sterritt to Robert Looker, dated May 14, 1958—Looker L/B infringed Huck patent	1262	662
No. O—Letter from John C. Sterritt to Robert Looker, Brown-Line Corporation, dated March 30, 1960—Denial of L/B license request	1263	663
No. R—Letter from R. Looker, Brown-Line Corporation to Robert A. Bicks, dated October 24, 1960—explanation of relationship	1264	664
No. S—Letter from Robert A. Bicks, U.S. Department of Justice to Mr. R. Looker, Brown-Line Corporation, dated October 20, 1960—Personal effects of L. C. Huck	1265	665

	Original	Print
Record from the United States District Court for the Eastern District of Michigan—Continued		
Transcript of proceedings in the case of *United States* v. *Huck Manufacturing Company, et al.* (Criminal Action # 39017) (excerpts), February 26, 27, 28 and March 1, 5, 6 and 7, 1963—Continued		
DEFENDANTS' EXHIBITS—Continued		
No. U—Letter from R. Looker, Brown-Line Corporation to Mr. Robert A. Bicks, dated February 8, 1961—Information of missiles price fix, etc.	1266	666
No. V—Letter from Robert Looker, Brown-Line Corporation to U.S. Department of Justice, Attention: Mr. Lee Loevinger, dated April 10, 1961—Complains of Justice Department not taking action	1268	668
No. W—Letter from R. Looker, Brown-Line Corporation to Mr. Lee Loevinger, dated July 26, 1961—Renews request for Justice Department action, etc.	1269	669
No. X—Letter from Looker to Mr. J. L. Lipson, U.S. Department of Justice, dated October 27, 1961	1271	671
No. Y—R. Looker, Huck Manufacturing Company, Departmental Correspendence, dated August 11, 1955 to A. W. Armour, Subject: License	1272	672
No. Z—Huck Manufacturing Co., Drawing of commercial lockbolt—Sam Egnot, 10/8/54	1273	675
No. AA—Letter from Robert Looker, Huck Manufacturing Company to John C. Sterritt, dated October 19, 1954—Description of drawing by Sam Egnot	1274	677
No. BB—Letter from R. Looker, Brown-Line Corporation to Mr. John Sterritt, dated June 2, 1961—Inclusion of Egnot disclosure to Looker patent	1276	679
No. CC—Patent application #2,978,946, R. Looker, "Grooved Pin With Reformable Collar to Accommodate Various Thicknesses", dated April 11, 1961, filed February 11, 1957	1277	681

	Original	Print
Record from the United States District Court for the Eastern District of Michigan—Continued		
Transcript of proceedings in the case of *United States v. Huck Manufacturing Company, et al.* (Criminal Action # 39017) (excerpts), February 26, 27, 28 and March 1, 5, 6 and 7, 1963—Continued		
DEFENDANTS' EXHIBITS—Continued		
No. DD—Martin E. Welch, Jr., Huck Manufacturing Company, Departmental Correspondence, dated August 23, 1954 to "To All Product Engineers", Subject, Catalogue Sheets New Order Pricing Policy	1285	689
No. EE—Memorandum, dated June 9, 1958, Subject: Price Policy—Lockbolt Products	1288	693
Motion of defendants to dismiss under Rule 41(b) of the Federal Rules of Civil Procedure, etc.	1289	694
Transcript of proceedings in Civil Action No. 21791 on motion of defendants to dismiss, etc., April 22, 1963 (excerpts)	1291	696
Presentation by Mr. Dickey	1292	697
Presentation by Mr. Lipson	1294	697
Findings of fact and conclusions of law upon dismissal under Rule 41(b) of the Federal Rules of Civil Procedure	1301	700
Notice of appeal to the Supreme Court of the United States	1328	723
Motion of defendants to supplement the record	1331	724
Unsigned pre-trial order	1333	726
Letter from Assistant Attorney General, Antitrust Division to Honorable Thaddeus M. Machrowicz, dated October 30, 1962	1338	730
Unsigned second pre-trial order	1341	733
Order extending time for docketing case	1346	737
Transcript of proceedings in Civil Action No. 21791 on defendant's motion to supplement record, June 22, 1964	1347	738
Appearances	1347	738
Statement on behalf of defendant, Huck and colloquy	1348	739
Statement on behalf of plaintiff and colloquy	1351	740
Statement on behalf of defendant, Townsend and colloquy	1370	751
Reporter's certificate (omitted in printing)	1391	
Order extending time for docketing case	1392	762
Order to enter final judgment nunc pro tunc	1393	763
Notice of appeal to the Supreme Court of the United States	1394	764
Pre-trial order entered August 19, 1964	1395	765
Second pre-trial order entered August 19, 1964	1400	770

	Original	Print
Record from the United States District Court for the Eastern District of Michigan—Continued		
Order granting defendants' motion to supplement record	1404	773
Memorandum on order granting defendants' motion to supplement record	1405	774
Letter from Assistant Attorney General, Antitrust Division to Honorable Thaddeus M. Machrowicz, dated October 30, 1962	1410	779
Order extending time for docketing case	1413	782
Order noting probable jurisdiction	1414	782

[fol. a] [File endorsement omitted]

IN THE UNITED STATES DISTRICT COURT FOR THE EASTERN DISTRICT OF MICHIGAN

Civil No. 21791

UNITED STATES OF AMERICA, Plaintiff,

v.

HUCK MANUFACTURING COMPANY, AND TOWNSEND COMPANY, Defendants.

COMPLAINT—Filed October 24, 1961

United States of America, by its attorneys, acting under the direction of the Attorney General of the United States, brings this action against the defendants named herein and complains and alleges as follows:

I

Jurisdiction and Venue

1. This complaint is filed and these proceedings are instituted under Section 4 of the Act of Congress of July 2, 1890, c. 647, 26 Stat. 209 (15 U.S.C. § 4), as amended, entitled, "An Act to protect the trade and commerce against unlawful restraints and monopolies," commonly known as the Sherman Act, in order to prevent and restrain continuing violations by the defendants, as hereinafter alleged, of Sections 1 and 2 of said Act.

2. Each of the defendants maintains an office, transacts business, and is found within the Eastern District of Michigan.

II

Defendants

3. The corporations named below are hereby made defendants herein. Each said corporation is organized and exists under the laws of the state indicated, has its principal place of business in the city indicated, and manufactures lockbolts in plants at the locations indicated. Within

the period of time covered by this complaint said defend-
[fol. b] ants have engaged in business of manufacturing and selling lockbolts throughout the United States;

Name of Corporation	State of Incorporation	Principal Place of Business	Location of Plants
Huck Manufacturing Company	Michigan	Detroit, Michigan	Detroit, Michigan
Townsend Company	Pennsylvania	Beaver Falls, Pennsylvania	Ellwood City, Pennsylvania Santa Ana, California

4. The acts alleged in this complaint have been done by each defendant were authorized, ordered or done by the officers, agents, employees or representatives of such defendant while actively engaged in the management, direction or control of its affairs.

III

Definitions

5. As used herein, "lockbolt" incorporates the terms "lockbolt pin" and "lockbolt collar" and means a two-part metal fastening device used to permanently join together two or more pieces of metal in the manner illustrated, but not limited, by Appendices A and B attached to this complaint. A lockbolt consists of a headed metal pin with a grooved shank about which the lockbolt collar is swaged. A lockbolt collar is that part of the lockbolt consisting of a cylindrical piece of metal designed to slip over the lockbolt pin and be swaged onto its grooves.

IV

Trade and Commerce

6. Lockbolts are patented devices used extensively in various domestic industries to fasten together two or more pieces of metal. They are produced in various shapes and sizes depending on the use for which they are intended. Lockbolts are also constructed of a number of different metals including alloy steels, aluminum and titanium.
[fol. c] 7. The major portion of all lockbolts are designed

for use in the airframe manufacturing industry. Almost every major airplane manufacturer in the United States uses vast quantities of lockbolts. Hundreds of thousands of them are used to hold together the wings and body of each large jet aircraft produced for both civilian and military use. Lockbolts are used extensively in the production of military and civilian propeller-driven aircraft. Lockbolts are also used in the manufacture and repair of truck-trailers, house-trailers, railroad cars and ships, including United States naval vessels. They are also used in many other industrial applications where formerly a nut and bolt or rivet or other fastener would have been used.

8. A lockbolt is superior to the ordinary rivet in that a rivet must be made of malleable material and can, therefore, be cut or sheared by the movement of the metal sheets which it joins. The lockbolt pin, however, can be made of metal strong enough to withstand the shearing action. Unlike the rivet, the lockbolt also pulls together the pieces of metal being joined and thereby eliminates "sheet-gap." Unlike a nut and bolt a lockbolt cannot be loosened by either vibration or the passage of time.

9. Although other devices are also used to join individual pieces of metal, none have the peculiar advantages of lockbolts.

10. Particularly in the aircraft manufacturing industry, once the use of the lockbolt fastener has been specified by a manufacturer's engineering staff, other fastening devices cannot thereafter be readily substituted.

11. Lockbolts are manufactured and sold by the Huck Manufacturing Company of Detroit, Michigan, under patents assigned to it. Huck Manufacturing Company has licensed Townsend Company of Beaver Falls, Pennsylvania, to manufacture and sell a general line of lockbolts and has also licensed two other firms to manufacture and sell lockbolts of titanium only.

[fol. d] 12. Lockbolts are produced in Michigan, California and Pennsylvania and shipped in interstate commerce to customers throughout the United States.

13. Lockbolts sold in the United States in recent years were valued at approximately $16 million annually.

V

Offenses Charged

14. Beginning at least as early as 1954, the exact date being to the plaintiff unknown, and continuing thereafter up to and including the date of the filing of this complaint, the defendants have engaged in a combination and conspiracy in unreasonable restraint of trade and to monopolize the aforesaid interstate trade and commerce in lockbolts in violation of Sections 1 and 2 of the Sherman Act. The unlawful combination and conspiracy is continuing and will continue unless the relief hereinafter prayed for is granted.

15. The aforesaid combination and conspiracy has consisted of a continuing agreement, understanding and concert of action among the defendants, the substantial terms of which have been and are:

a. To fix and maintain prices, terms and conditions for the sale of lockbolts manufactured in the United States by defendants who are the only producers of a general line of lockbolts;

b. To limit the number of licensees permitted to manufacture lockbolts;

c. To require the consent of the only general licensee before the patent owner is allowed to license any other firm for the production of its general line of lockbolts;

d. To have the defendants who are the two dominant manufacturers of lockbolts cross-license each other on all improvements of and substitutes for lockbolts which might in the future be developed by either defendant.

[f l. e] 16. In formulating and effectuating the aforesaid unlawful combination and conspiracy the defendants have entered into various agreements among themselves and done various things and performed various acts including among others, the following:

a. Have negotiated with each other for a license to manufacture and sell lockbolts which would limit the lockbolt business to the two defendants only;

b. Held a secret meeting in 1954 from which their attorneys were specifically excluded. At this meeting the defendants agreed that in addition to the written terms of a patent license, defendant Townsend Company would follow the prices fixed by defendant Huck Manufacturing Company so long as Huck Manufacturing Company refrained from licensing any other firms for the general production and sale of lockbolts;

c. Entered into a series of license agreements by which each defendant agreed to cross-license the other for all improvements made in the manufacture of lockbolts and substitutes for lockbolts and related products;

d. Have since the date of the oral agreement referred to above, fixed substantially identical price levels for all types of lockbolts produced by both defendants;

e. The patent owner, has since the date of the oral agreement referred to above, refused to license the manufacture of a general line of lockbolts to any other firm despite requests for licenses from qualified manufactures.

[fol. f]

VI

Effects

17. The combination and conspiracy hereinbefore charged has had the following effects:

a. Prices for the sale of the types of lockbolts produced by both defendants have been artificially enhanced and the cost of construction, maintenance and repair of military and civilian aircraft and other articles of commerce have been substantially increased;

b. Price competition among the corporate defendants in the sale of lockbolts has been forestalled;

c. The entrance of other firms into the lockbolt manufacturing business has been prevented;

d. The advance of technology relating to lockbolts has been artificially restricted;

e. The monopoly authorized to the patent owner has been extended beyond the scope permitted by law;

f. Interstate and foreign trade and commerce in the sale and distribution of lockbolts has been unreasonably restrained.

VII

Prayer

Wherefore, plaintiff demands:

1. That the aforesaid agreement, contract, combination, conspiracy and attempt to monopolize be decreed unlawful and in violation of Sections 1 and 2 of the Sherman Act.

2. That the court adjudge and decree that defendants have combined and conspired to restrain and to monopolize interstate trade and commerce in lockbolts in violation of Sections 1 and 2 of the Sherman Act.

[fol. g] 3. That the Court enter such orders as it may deem necessary and appropriate to enjoin and prohibit continuation of such unlawful combination and conspiracy, or any like or similar combination or conspiracy, or any other combination or conspiracy having like or similar effects.

4. That the Court adjudge and decree that defendants have unlawfully used patents and patent rights owned or controlled by defendant Huck Manufacturing Company in instituting, effectuating, and maintaining the aforesaid combination, and conspiracy, and that the court enter such order regarding such patents, patent rights and the techniques of manufacturing the devices involved as may appear necessary and appropriate to dissipate the effects of said unlawful combination and conspiracy, and to restore competition in the manufacture and sale of lockbolts.

5. That the plaintiff have such other and further relief as the court may deem just and proper.

6. That plaintiff recover the costs of this suit.

Dated:

/s/ Charles R. Esherick, /s/ Jack L. Lipson, Attorneys, Department of Justice.

/s/ Robert F. Kennedy, Attorney General. /s/ Lee Loevinger, Assistant Attorney General. /s/ Lewis Bernstein, Attorney, Department of Justice. /s/ Lawrence Gubow, United States Attorney.

Standard Commercial Lockbolt Types

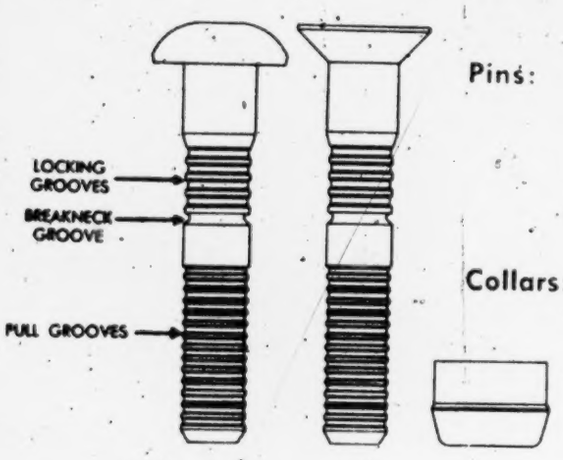

Diameters: 3/16", 1/4", 5/16", 3/8", and 1/2"

Heads: Brazier, round and 90° countersunk heads. Other head types available on special order. Dimensions and specifications for Townsend Lockbolt heads shown on page 5.

Pins:

Materials
Mild Steel
2024-T4 (24S-T4) Aluminum Alloy
6061-T6 (61S-T6) Aluminum Alloy.
Stainless Steel†
Dimensions and specifications for lockbolt pins are shown on pages 4 and 5. Lockbolt pins available in other materials on special order.

Collars:

Materials
Mild Steel, for use with steel lockbolt pins.
6061-T6 (61S-T67) Aluminum Alloy for use with 2024-T4 (24S-T4) aluminum lockbolt pins.
6061 (61S) Aluminum Alloy for use with 6061-T6 (61S-T6) aluminum alloy lockbolt pins.
Stainless Steel†
Dimensions and specifications for lockbolt collars are shown on pages 4 and 5. Lockbolt collars available in other materials on special order.

†*Information on application.*
For application procedures, see page 6.

How They Work

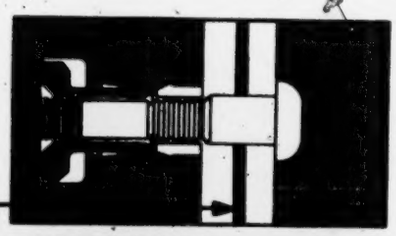

Fig. 1. Note gap between sheets

Fig. 1. The pin is inserted from one side of the work; the locking collar is placed over the projecting lockbolt pin tail; the gun is then applied, and the chuck jaws automatically engage the pull grooves of the projecting pin tail.

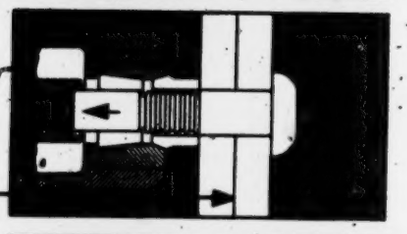

Fig. 2. High clinching action pulls sheets together

Fig. 2. Depressing the gun trigger causes a pull to be exerted on the pin. The reaction of the pull is taken against the collar by the swaging anvil, which draws the work tightly together as in a fitting-up operation.

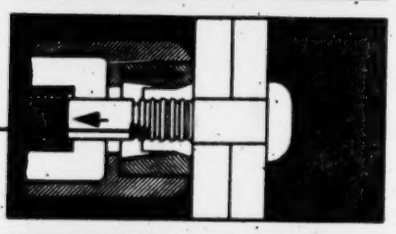

Fig. 3. Collar swaged into grooves

Fig. 3. As the pull on the pin increases, the anvil of the tool is drawn over the collar, swaging the collar into the locking grooves of the pin to form a rigid, permanent lock.

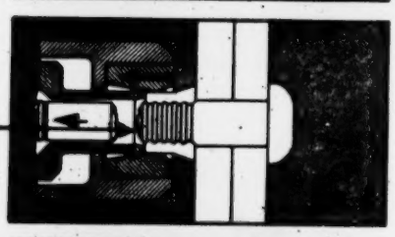

Fig. 4. Pin fractures at breakneck groove

Fig. 4 Continued build-up of force automatically breaks the lockbolt pin in tension at the breakneck groove and the pin tail is automatically ejected.

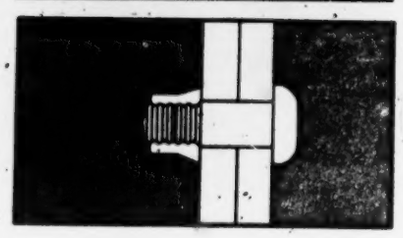

Fig. 5. Installed lockbolt

Fig. 5 Sketch shows lockbolt installed as a permanent, secure fastener. Note how collar has been swaged into the locking grooves on the pin.

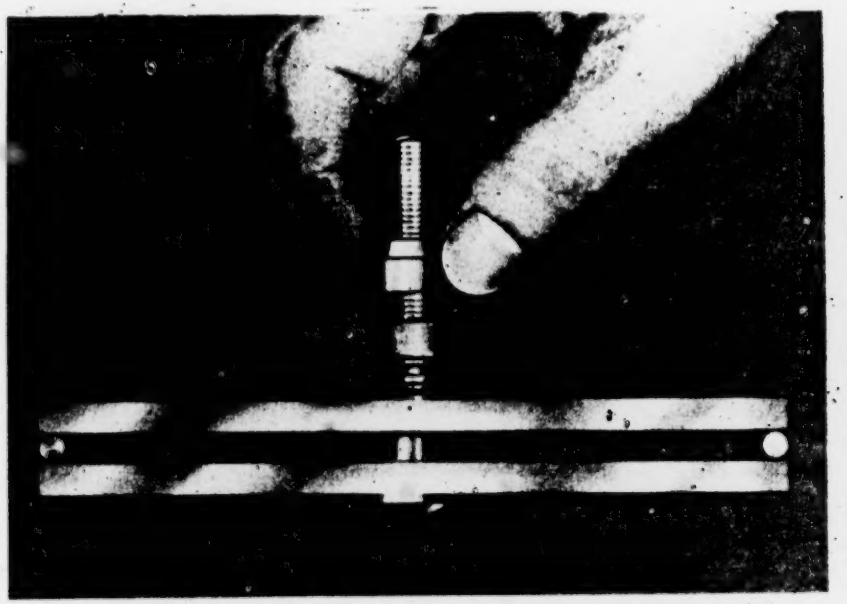

Here, two 1/4" steel plates, separated by two 7/32" pins are assembled for demonstration with a 3/8" diameter lockbolt.

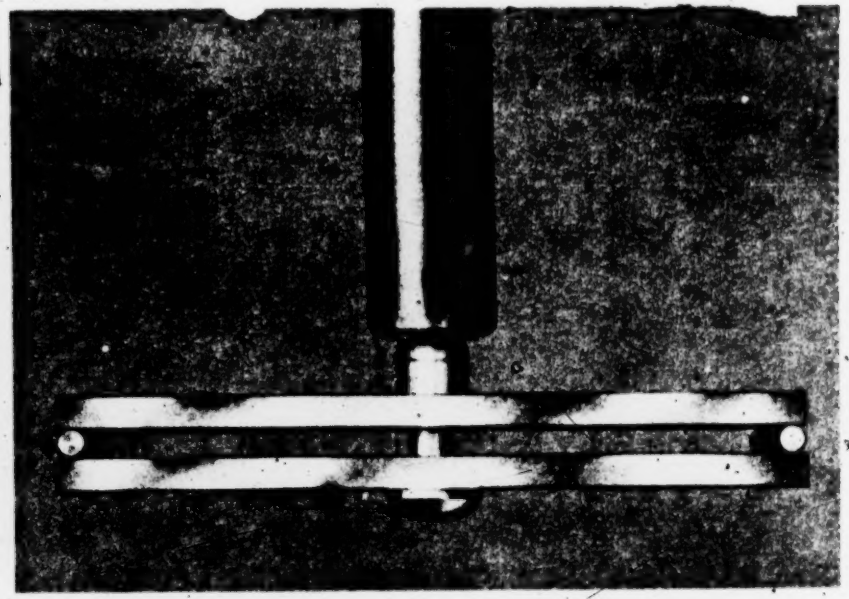

The nose of the pneumatic pulling gun is slipped over the pin to engage the pulling grooves. Purpose of test is to show high clinch value.

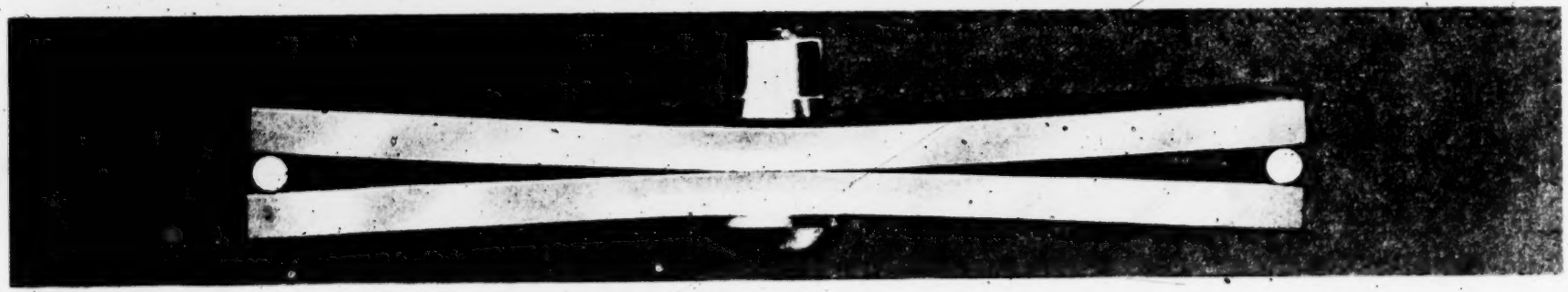

[fol. j] [File endorsement omitted]

IN THE UNITED STATES DISTRICT COURT FOR THE EASTERN DISTRICT OF MICHIGAN, SOUTHERN DIVISION

Civil Action No. 21791

[Title omitted]

ANSWER OF DEFENDANT HUCK MANUFACTUTING COMPANY—Filed April 23, 1962

Huck Manufacturing Company, one of the defendants above named, through its attorneys, makes answer to plaintiff's complaint and avers in support thereof the following:

First Defense

The complaint fails to state a claim against the defendant, Huck Manufacturing Company, upon which relief can be granted.

Second Defense

Defendant, Huck Manufacturing Company, makes its answer to the numbered paragraphs of the complaint filed herein as follows:

1. Defendant admits the allegations of paragraph 1 of the complaint, save and except that defendant denies that it has violated or continues to violate Sections 1 and 2 of the Sherman Act.

[fol. k] 2. Defendant admits that it maintains an office, transacts business and is found within the Eastern District of Michigan.

3. Defendant admits that it is a corporation organized and existing under the laws of the State of Michigan, has its principal place of business in the City of Detroit, Michigan, manufactures lockbolts in its plant located at Detroit, Michigan, and that it is engaged in manufacturing and selling lockbolts in the United States.

4. Answering paragraph 4 of said complaint, this defendant denies that the acts alleged in said complaint to have been done by this defendant were authorized, ordered

or done by the officers, agents, employees or representatives of this defendant while actively engaged in the management, direction and control of this defendant's affairs, save and except for such acts as are in this answer specifically stated or admitted to have been done by this defendant.

5. Defendant denies the allegations of paragraph 5 of the complaint as stated therein. Defendant avers that as understood by defendant the term "lockbolt" includes the term "lockbolt pin" and the term "lockbolt collar" and means a two-part metal fastening device used to permanently join together two or more pieces of metal in the manner illustrated in appendices A and B attached to the complaint; that a lockbolt consists of a metal pin having an enlarged head portion to abut against one of the pieces of metal to be joined, a groved portion in the pin about which the lockbolt collar is swaged, and a grooved pulling portion in the pin which is broken off when the swaging of the collar is completed, as shown in appendices A and B attached to the complaint; that a lockbolt collar is that part of the lock-[fol. 1] bolt consisting of the hollow cylindrical piece of metal designed to slip over the lockbolt pin and be swaged into the grooves of the lockbolt pin as shown in appendices A and B attached to the complaint.

6. Defendant admits the allegations of paragraph 6 of the complaint.

7. Defendant denies the allegations of paragraph 7 of the complaint as stated therein. Defendant admits that the major portion of lockbolts produced by this defendant are designed to meet the standards of the airplane industry. Defendant admits that lockbolts are used by airplane manufacturers in the United States in the construction of jet and propeller driven civilian and military aircraft but avers that lockbolts are a small proportion of the fastening devices used in the construction of each such aircraft. Defendant admits that lockbolts are used in the manufacture and repair of truck trailers, house trailers, railroad cars and ships, including United States naval vessels, and that they are used in other industrial applications, but avers that many types of fasteners other than lockbolts are likewise used.

8. Defendant denies the allegations of paragraph 8 of the complaint as stated therein. Defendant admits that a

lockbolt pin can be made of metal less malleable and therefore more resistant under the same conditions to shear stresses than rivets made of more malleable material. Defendant avers, however, that rivets have been available and in use since long before lockbolts having the shank portions thereof made of relatively non-malleable material capable of resisting shear stresses under like conditions to the same degree as lockbolts. Defendant admits that the lockbolt can be utilized to pull together pieces of metal being [fol. m] joined and eliminate "sheet gap" between such pieces through a substantially greater space than can be accomplished by rivets, and avers that a bolt and nut will serve the same purpose as a lockbolt in this respect. Defendant avers that bolts and nuts that cannot be loosened by either vibration or passage of time have been designed and are and have been available and in use since long before lockbolts.

9. Defendant denies the allegations of paragraph 9 of said complaint as stated therein, and avers that while lockbolts have some advantages over other devices used to join individual pieces of metal, other devices used to join individual pieces of metal have advantages that lockbolts do not have.

10. Defendant denies the allegations of paragraph 10 of said complaint as stated therein. Defendant avers that the aircraft manufacturer has a choice of fastening devices to be used to fasten together the parts of any airplane under design and that whatever fastening devices are chosen, other fastening devices cannot thereafter be readily substituted, and that this hold true regardless of whether a lockbolt is to be substituted for another fastening device originally selected or whether another fastening device is to be substituted for the lockbolt originally selected.

11. Defendant admits the allegations of paragraph 11 of the complaint.

12. Defendant admits the allegations of paragraph 12 of the complaint.

13. Defendant denies the allegations of paragraph 13 of the complaint.

14. Defendant denies the allegations of paragraph 14 of the complaint.

[fols. n-o] 15. Defendant denies the allegations of paragraph 15 of the complaint.

16. Defendant denies the allegations of paragraph 16 of the complaint.

17. Defendant denies the allegations of paragraph 17 of the complaint.

Wherefore, defendant, Huck Manufacturing Company, demands that the complaint be dismissed.

Huck Manufacturing Company, Defendant. By Arthur W. Dickey, Its Attorneys, 7-141 General Motors Building, Detroit 2, Michigan.

Of Counsel for Defendant, Huck Manufacturing Company:

Albert M. Stern per AWD, 2388 First National Building, Detroit 26, Michigan. Harness, Dickey & Pierce, 7-141 General Motors Building, Detroit 2, Michigan.

Certificate of Service (omitted in printing).

[fol. p] [File endorsement omitted]

IN THE UNITED STATES DISTRICT COURT FOR THE EASTERN DISTRICT OF MICHIGAN, SOUTHERN DIVISION

Civil Action No. 21791

[Title omitted]

ANSWER OF DEFENDANT, TOWNSEND COMPANY—Filed April 23, 1962

Townsend Company, one of the defendants above named, through its attorneys, makes answer to the Plaintiff's Complaint herein as follows:

First Defense

The Complaint fails to state a cause of action against the defendant, Townsend Company, upon which relief can be granted.

Second Defense

Defendant, Townsend Company, in answer to the allegations of fact in the numbered paragraphs of the Complaint pleads, insofar as they apply to it, as follows:

1. Admitted, except it is denied that this defendant has violated or continues to violate Sections 1 and 2 of the Sherman Act.

2. Admitted.

3. Admitted, except the allegation that this defendant is a corporation incorporated under the laws of the Commonwealth of Pennsylvania, which is denied. Defendant avers, on the contrary, that it is a corporation incorporated under the laws of the State of Delaware.

[fol. q] 4. The allegations of paragraph 4 of the Complaint are denied as stated. It is admitted, however, that such acts as are stated or admitted in this Answer to have been done by defendant, Townsend Company, were done by the officers, agents, employees or representatives of said defendant while engaged in the course of their employment with said defendant.

5. The allegations contained in paragraph 5 of the Complaint are denied as stated. On the contrary, this defendant avers that, as understood by it and in the fastener industry, the term "lockbolt" means a two-part metal fastening device used to join together permanently two or more pieces of metal in the manner illustrated by Appendices A and B attached to the Complaint; that said two parts are a "lockbolt pin" and a "lockbolt collar"; that a lockbolt pin consists of a metal pin having an enlarged head which abuts against one of the members being joined, a grooved portion about which the lockbolt collar is swaged and a grooved pintail which is gripped, pulled and broken off as the collar is swaged; and that a lockbolt collar consists of a cylindrical piece of metal designed to slip over the lockbolt pin and be swaged onto its grooves. Defendant avers in addition, that throughout its Answer to the Complaint it has taken the term "lockbolt" as used in the Complaint to mean "lockbolt" as defined and described in this paragraph of the Answer, and that the term "lockbolt" as used in this Answer means "lockbolt" as defined and described in this paragraph 5 of the Answer.

6. Admitted.

7. The allegations contained in paragraph 7 of the Complaint are admitted in part and denied in part. Defendant admits that the major portion of lockbolts manufactured by it are designed for use in the airframe manufacturing [fol. r] industry. The remaining allegations of said paragraph 7 are denied as stated. It is admitted, however, that lockbolts are used in the airframe manufacturing industry in production of military and civilian jet and propeller-driven aircraft and in the manufacture and repair of truck-trailers, house-trailers, railroad cars and ships, including United States Naval vessels, and in other industrial applications.

8. The allegations of paragraph 8 of the Complaint are denied as stated. It is admitted that for some purposes the lockbolt may have some advantages over an ordinary rivet or a nut and bolt, such as withstanding shearing actions, elimination of "sheet gap", and avoidance of loosening, but that for other purposes the lockbolt may have some disadvantages when compared to an ordinary rivet or a nut and bolt. It is further averred that the

lockbolt is not the only fastener which has certain advantages over an ordinary rivet or a nut and bolt, and that some fastening devices have some advantages over an ordinary rivet or a nut and bolt which the lockbolt does not have.

9. Denied.

10. Denied.

11. Admitted.

12. Admitted.

13. In answer to the allegation contained in paragraph 13 of the Complaint, defendant states that it is without knowledge or information sufficient to form a belief as to the truth thereof.

14. Denied.

[fol. s] 15. Denied.

16. Denied.

17. Denied.

Wherefore, the defendant, Townsend Company, requests that the Complaint be dismissed as to it.

T. W. Pomeroy, Samuel K. McCune, W. Walter Braham, Jr., Daniel J. Tindall, Jr., Attorneys for Defendant, Townsend Company.

Of Counsel:

Dickenson, Wright, McKean & Cudlip, 800 First National Building, Detroit 26, Michigan. Kirkpatrick, Pomeroy, Lockhart & Johnson, 1130 Oliver Building, Pittsburgh 22, Pennsylvania.

[fol. t] [File endorsement omitted]

IN THE UNITED STATES DISTRICT COURT FOR THE EASTERN DISTRICT OF MICHIGAN

Civil No. 21-791

[Title omitted]

ORDER PLACING IN EVIDENCE THE ENTIRE RECORD, ETC.—Filed April 2, 1963

The attached Stipulation having been presented, and the Court being fully advised in the premises and after consideration thereof,

It is Hereby Ordered that the same stipulation be and hereby is approved and that the Record of Proceedings in *United States* v. *Huck Manufacturing Company, et al.*, (Criminal Action #39017, E. D. Mich.), is hereby received in evidence in this action subject to all objections appearing therein, and further that such Record constitutes the plaintiff's case-in-chief in this action on which plaintiff rests and further that defendants move on or before April 15, 1963 pursuant to the Federal Rules of Civil Procedure for a dismissal of this action on that Record.

Parties shall file briefs by April 15, 1963. Oral argument shall be held April 22, 1963. Parties shall have the right to file supplementary briefs by May 3, 1963.

/s/ Thaddeus M. Machrowicz, United States District Judge.

[fol. u] IN THE UNITED STATES DISTRICT COURT FOR THE EASTERN DISTRICT OF MICHIGAN

Civil No. 21-791

[Title omitted]

STIPULATION—Filed April 2, 1963

It is hereby stipulated among all parties to this action by their attorneys as follows:

The entire Record in the case of *United States* v. *Huck Manufacturing Company, et al.*, (Criminal Action #39017, E. D. Mich.) is to be placed in evidence in this action subject to all objections appearing therein. Such Record shall constitute the plaintiff's case-in-chief in this action and on which plaintiff will rest. Defendants will move by April 15, 1963 pursuant to the Federal Rules of Civil Procedure for a dismissal of this action on that Record.

Jack L. Lipson, Charles R. Esherick, Attorneys, United States. Date, March 20, 1963.

Arthur W. Dickey, Harness Dickey Pierce, Albert M. Stern, Stern and Rossier, by permission, HWD, Attorneys, Huck Manufacturing Company. Date, April 1st, 1963.

T. W. Pomeroy, Kirkpatrick, Pomeroy, Lockhart & Johnson, Attorneys, Townsend Company. Date, March 21, 1963.

[fol. 1] [File endorsement omitted]

IN THE UNITED STATES DISTRICT COURT FOR THE EASTERN DISTRICT OF MICHIGAN, SOUTHERN DIVISION

Criminal Action No. 39017

THE UNITED STATES OF AMERICA,

vs.

HUCK MANUFACTURING COMPANY, TOWNSEND COMPANY, A. WATSON ARMOUR, III, AND FRED R. DICKENSON, Defendants.

Transcript of Proceedings—February 26, 1963

Proceedings had and testimony taken in the above-entitled cause, before the Hon. Fred W. Kaess, District Judge, and a Jury, at Detroit, Michigan, commencing on Tuesday, February 26, 1963, at 10:45 o'clock A. M.

APPEARANCES:

Jack L. Lipson, Esq., and Charles R. Esherick, Esq., Assistant United States Attorneys, Appearing on behalf of the Government.

James E. Haggerty, Esq., and Arthur W. Dickey, Esq., Appearing on behalf of the Defendants Huck Manufacturing Company and A. Watson Armour, III.

Thomas W. Pomeroy, Esq., Samuel K. McCune, Esq., Ap- [fols. 2-129] pearing on behalf of the Defendants Townsend Company and Fred R. Dickenson. W. Walter Braham, Jr., Esq., co-counsel.

Daniel J. Tindall, Jr., Esq., (Dicksinson, Wright, McKean and Cudlip), of counsel, Appearing on behalf of the Defendants Townsend Company and Fred R. Dickenson.

[fol. 130] ROBERT LOOKER, was thereupon called as a witness herein, and having been first duly sworn, testified as follows:

* * * * * * * *

Direct examination.

By Mr. Lipson:

Q. Will you please state your full name?
A. Robert Looker.
Q. Your address, Mr. Looker?
A. 46 Haldeman Drive, Santa Monica, California.
Q. Is that your residence address or your business address?
[fol. 131] A. Residence address.
Q. What is your business address, Mr. Looker?
A. 111 Main Street, El Segundo, California.
Q. When were you born, Mr. Looker? What year?
A. 1922.
Q. Mr. Looker, may I ask where you received your education?
A. I graduated from the Grosse Pointe High School in Grosse Pointe, Michigan, and also graduated from the United States Naval Academy at Annapolis, Maryland.
Q. Did you receive a degree from that Academy?
A. Yes.
Q. What was it?
A. Bachelor of Science.
Q. What did you do upon graduation from the Academy?
A. I was assigned to the USS Massachusetts.
Q. In what capacity?
A. I was Assistant Division Officer in the Secondary Battery of that ship.
Q. Did that entail any engineering duties?
A. Not specifically, no.
Q. Did any of your naval service entail engineering duties?
A. Yes. At one time, I was Chief Engineer of an LST.
Q. When was that?
A. In 1947.
Q. When did you leave the Navy?
[fol. 132] A. September, 1947.

Q. And what did you do upon leaving the Navy in way of employment?

A. I was employed by Huck Manufacturing Company of Detroit.

Q. Now, I would like to clear something up: Did you have any family relationship with Huck Manufacturing Company?

A. Yes.

Q. What was it?

A. Mr. Louis Charles Huck, the President of Huck Manufacturing Company at the time, was my stepfather.

Q. Do you have any current relationship to that company?

A. No.

Q. Does any member of your family have any current relationship with that company?

A. You are speaking of relationship with the principal owners of the company?

Q. No, with Huck Manufacturing Company, itself.

A. No.

Q. Mr. Looker, have you been served with a subpoena to testify at this trial?

A. Yes.

Q. Mr. Looker, you know me; don't you?

A. Yes.

Q. Do you know any other members of the Department of Justice in connection with this case?

[fol. 133] A. Yes.

Q. Have you spoken with any other members of the Department of Justice in connection with this case?

A. Yes.

Q. Do you know Mr. Esherick?

A. I do.

Q. Do you know a Mr. Hollander?

A. Yes.

Q. In connection with this case?

A. Yes.

Q. Have you spoken with any other members of the Department of Justice in connection with this case?

A. Yes. I spoke with a gentleman in Washington in 1958, and two assistants and I don't recall any of their names.

Q. Would it refresh your recollection if I mentioned Mr. Beckler (?)?

A. Yes, it would. That was one of the gentlemen.

Q. Have you ever had any correspondence with the Department of Justice in connection with this case?

A. Yes, I have.

Q. Do you remember the persons with whom you corresponded?

A. I had corresponded with yourself, Mr. Esherick, and Mr. Beckler, Mr. Hollander, Mr. Bicks, Mr. Loevinger, whom I have not met, and I believe that is all.

Q. Thank you. When you joined Huck Manufacturing [fol. 134] Company, in what capacity were you employed?

A. I was a clerk in the sales office of that company.

Q. How long did you remain a clerk?

A. For about a two, two and a half year period.

Q. What position did you move to after your clerkship was finished?

A. I was made Manager of Technical Publications.

Q. And when was that? What year, approximately?

A. I would say early 1952.

Q. What position did you have after that?

A. I was made Sales Manager.

Q. How long did you hold that position?

A. Until May of 1954.

Q. And what position did you take then?

A. I was elected Vice President in Charge of Sales.

Q. And how long did you remain Vice President?

A. For about a two-year period.

Q. When did you leave Huck Manufacturing Company?

A. In August of 1956.

Q. Have you ever returned to Huck Manufacturing after that date?

A. To visit?

Q. No, as an employee?

A. No, I have not.

Q. What company did you become associated with upon leaving Huck?

[fol. 135] A. Brown-Line Corporation.

Q. Is that the same company you have mentioned earlier?

A. Yes, it is.

Q. I would like to go back to your duties as a clerk. What were they?

A. I was responsible to the Vice President in Charge of Sales for the keeping of clerical records having to do with the detailed activities of the sales personnel, and to some extent, the detailed sales of our company's products to its customers.

Q. To whom did you report as a clerk?

A. At first, to Mr. Robert Hendrickson, and then, to Mr. Frank A. Dobbs.

Q. Now, in your position as Manager of Technical Publications, what were your duties?

A. Essentially as before, plus the additional responsibility of publishing the company's sales and engineering literature.

Q. What kind of engineering literature do you have reference to?

A. Drawings describing the company's products; dimensional specifications of the products, such that their use was facilitated by our customers.

Q. What kind of sales literature did you have reference to?

A. One to four page brochures, things of that nature.

Q. Describing what?

[fol. 136] A. Describing the company's products and their application.

Q. What were your duties as Sales Manager for Huck?

A. I was responsible to the Vice President in Charge of Sales, for supervision of the company sales personnel under his direction, and to some extent of making sales for the company in association with the company sales personnel.

Q. Who was that person to whom you were responsible?

A. Frank A. Dobbs.

Q. And what title did he have?

A. Vice President in Charge of Sales.

Q. When did you, yourself, become Vice President in Charge of Sales?

A. In May, 1954.

Q. Will you describe the duties that you had in that position?

A. Well, I was responsible to the company's President for the sales of the company.

Q. How many people in the company were over you? To whom did you report?

A. I reported to a Mr. Alfred E. Benkert.

Q. And what position did he hold?

A. He was Executive Vice President.

Q. And was there one over Mr. Benkert?

A. Yes, Mr. A. Watson Armour, the III.

Q. Is Mr. Armour in the Courtroom?

A. Yes, he is.

[fol. 137] Q. Would you point to him, please?

A. (Witness complies.)

Q. Thank you. Who is charged with the administration of Huck's Sales Department?

A. During the period which I——

Q. (Interposing): During the period when you were employed at Huck, yes.

A. When I was Vice President in Charge of Sales, I was. Before that time, Mr. Frank A. Dobbs was and before that time, Mr. Robert Hendrickson was.

Q. Did you have anything to do with Huck's patent matters?

A. Yes, I did.

Q. Would you describe the nature of your duties in connection with Huck's patent matters?

A. Well, before the death of the company's President, Louis Huck, I worked with him in matters relating to patents, including the prosecution of patents, the planning of patent policy and the execution of whatever patent matters were necessary for the benefit of the company.

Q. Did these duties continue after Mr. Huck died, or did they terminate?

A. They continued after Mr. Huck's death, yes.

Q. Under whose direction?

A. Under the direction of Mr. Armour, the company's President.

Q. Mr. Looker, who, in Huck Manufacturing Company, decided what products Huck would make?

[fol. 138] Mr. Haggerty: I object to it unless the time is fixed.

The Court: Sustained.

Q. (By Mr. Lipson, continuing): During your period as Vice President in Charge of Sales?

A. There was a committee established, made up of, seems to me, about ten or twelve people of which I was a part.

The committee's responsibility—the committee was assigned the responsibility of deciding whether or not a proposed product would be manufactured and sold.

The Court: Then there was a committee that was created; is that correct?

A. That is correct, yes, sir.

Q. (By Mr. Lipson, continuing): Did the committee make the final determination on these questions?

A. Yes.

Q. Did anyone chair that committee?

A. I don't recall.

Q. Did anyone direct the activities of that committee?

A. I have to only assume so. I don't recall that they did or not.

Q. Do you recall any of the members of that committee?

A. Yes.

Q. Who are they?

[fol. 139] A. I was one of them. Mr. Brillmyer was one, the company's Vice President in Charge of Research. Mr. Pelletier was on the committee.

The Court: What other position did Mr. Pelletier have?

A. Beg pardon?

The Court: What other position did Mr. Pelletier have?

A. Mr. Pelletier was in charge of pricing the company's products.

Mr. Vanheck was on it.

The Court: And his position?

A. He was Chief Engineer of the company, Vice President and Chief Engineer. And it seems to me there were three or four others, but I don't recall who they were.

Q. (By Mr. Lipson, continuing): Do you recall whether Mr. Armour had anything to do with this committee?

A. I believe he established the committee.

Q. Mr. Looker, as Vice President in Charge of Sales, how many people did you supervise?

A. About twenty-five.

Q. Where were they located; would you say?

A. Well, there were about seven or eight of them in

Detroit, including the office staff, and we had sales representatives assigned from Boston to Los Angeles.

Q. Would you name some of the states in which they [fol. 140] are—or were located?

A. Yes. There was a representative in Massachusetts, in Pennsylvania, in New York, in Georgia, Michigan, Illinois, Ohio, Missouri, Texas, Washington, California, Minnesota, Louisiana. That's as far as my memory carries me.

Q. Thank you. Do you recall the circumstances under which you left the employ of Huck Manufacturing Company?

A. Yes, I do.

Q. What were those circumstances?

A. I resigned my position as Vice President in Charge of Sales.

Q. Was this a voluntary or involuntary act?

A. It was a voluntary act.

Q. Did the resignation come before—strike that. When was your resignation accepted?

A. About a week after I turned it in. It seems to me it was some time in early July of 1956.

Q. Was there a period between that time and the time you actually left the company?

A. Yes. I stayed with the company, in its employ, for about a five or six-week period after that.

Q. Would you explain how, how come you remained in the employ after your resignation?

A. Well, I—

Mr. Haggerty (Interposing): Object to it as incompetent, irrelevant and immaterial. It may be preliminary, but it [fol. 141] is totally irrelevant and immaterial.

Mr. Lipson: Your Honor, Mr. Looker's association with the Huck Manufacturing Company is the very core of this case, and I would like to get it on the record.

The Court: Objection overruled. You may continue.

Q. (By Mr. Lipson, continuing): Would you answer the question, please, Mr. Looker?

A. Yes. I had been writing for about a two-year period a so-called master sales document entitled "General Information Bulletin", and I had it just about finished by the

time I decided to leave the employ of the company. It had about a month's work left on it, as far as I was concerned, and the company kept me on after I resigned, for the purpose of completing that document.

Q. During the entire course of time when you were employed by Huck Manufacturing Company, was Mr. A. Watson Armour, the III employed by that company?

A. Yes.

Q. Would you tell us the positions he held with the company from 1947, until the time that you left the company?

A. He was Chairman of the Board for the entire period. He was—

The Court: When you say "the entire period", you mean 1947——

A. (Interrupting): 1947 through 1956. He was, I believe, [fol. 142] Executive Vice President up until the time of Mr. Huck's death in 1952. At that time, he was elected President of the company and remained President until the period that I left the company.

Q. (By Mr. Lipson, continuing): Would you tell the Jury what business Huck Manufacturing Company is in?

A. Yes. Huck—Huck Manufacturing Company is in the business of manufacturing and selling a very specialized line of fastening devices and their installation equipment.

Q. Would you give us the names of those devices?

A. Yes. The products of the company are divided into three groups. One is called a blind rivet, made in several types—several different types and styles; secondly, the lock bolt is the other major product; and the third major product are the installation tools for the assembly and installation of the other two products. So, there are two fastening devices and one line of tools that were the company's products during my period of employment.

Q. During the period of time you were employed in the Sales Department, both before you were Vice President in Charge of Sales, and after that time, to what extent, if any, were you concerned with lock bolt sales?

A. I was greatly concerned with lock bolt sales.

Q. Could you give us an estimate of the proportion of

the time that you spent on lock bolt sales, as compared to [fol. 143] the other devices that you mentioned?

A. It would be very difficult for me to do so.

Q. Was it more or less half of your time?

A. Approximately.

Q. Have you ever seen lock bolts?

A. Yes.

Q. How many times?

A. Oh, probably two or three thousand.

Q. Have you ever seen them actually made?

A. I have seen them manufactured, yes.

Q. Where?

A. At the Huck Company's factory on Bellevue in this city.

Q. Have you ever seen them installed?

A. I have, yes.

Q. Where have you seen them installed?

A. At the Huck Company in Detroit, and probably a hundred or two hundred of its customers' factories.

Q. Where would they be located? Can you name one or two of those factories where you saw them installed?

A. The Douglas Aircraft Company in Santa Monica, California; Lockheed in Burbank, California; the Boeing Company in Seattle, and so forth.

Q. I think that will suffice. Mr. Looker, in connection with your subpoena, were you required to bring any sketches with you?

[fol. 144] A. Yes.

Q. Do you have such sketches with you?

A. I do.

Q. Would you get them, please?

A. Yes. (Witness complies.)

Mr. Lipson: Would you mark this? Would the Reporter mark these as exhibits for the Government?

(Thereupon three drawings were marked for identification as Government Exhibits 1, 2, and 3, respectively, by the Court Reporter.)

Q. (By Mr. Lipson, continuing): Mr. Looker, I will show you Government Exhibits 1, 2, and 3, and ask you who prepared those exhibits.

A. I did.

Q. When did you prepare those exhibits?
A. Yesterday.

The Court: When? Yesterday?

A. Yesterday.

Mr. Lipson: I show these documents to counsel for the defendants.

Mr. Pomeroy: Do you have any copies of them?

Mr. Lipson: No, I am afraid not.

Mr. Pomeroy: May we have your Honor's indulgence to look at these?

[fol. 145] The Court: All right. I take it that these three exhibits are aids or in the nature of charts for your assistance in describing the lock bolt, itself, and not intended to be according to scale or anything of that sort? Merely for aiding and assisting the Jury in understanding what you are describing; is that it?

A. Yes, sir.

The Court: And not necessarily technically correct as to dimensions and things of that kind?

A. Yes, sir.

The Court: All right.

Mr. Dickey: If your Honor please, for the defendants Huck and Armour——

The Court: A little louder, please.

Mr. Dickey: I say, the Defendants Buck and Armour have no objection to these exhibits, identified as 1, 2, and 3, with this qualification: They are obviously somewhat crude drawings, not to scale, and may not accurately represent in some detail the lock bolts which they are apparently intended to illustrate.

As exhibits which are illustrative, in that qualified sense, we have no objection to their admission.

The Court: With that understanding, and maybe you didn't hear me, I asked if that were the purpose.

Mr. Dickey: Oh, you did?

The Court: For that purpose, and for that purpose only, [fol. 146] they may be admitted. I assume—any further objection? Any other objection?

Mr. Pomeroy: I have no objection, subject to the same qualification.

The Court: All right.

Mr. Pomeroy: They haven't been offered yet, I think, however.

The Court: All right.

Mr. Dickey: May we obtain copies of these?

Mr. Lipson: We will have to use them, and these are the only ones.

Mr. Dickey: Do you propose to make copies of those, so we can have them, or may we take them and have copies made of them?

Mr. Lipson: We can work that out, I am sure.

Mr. Dickey: All right.

Q. (By Mr. Lipson, continuing): Mr. Looker, are you familiar with the operation of a lock bolt device?

A. Yes, I am.

Q. Mr. Looker, using these charts, where necessary, would you explain to the Jury what a lock bolt physically is and how it operates?

The Court: Are you offering the exhibits, or do you want to wait? Go ahead.

Mr. Lipson: Well, I would like to have him use the [fol. 147] exhibits merely as you said, your Honor, as illustrative of his testimony.

The Court: All right.

A. Yes.

The Court: I doubt if they can be seen from there. We would prefer——

Mr. Haggerty (Interposing): Defense counsel would have to have a periscope, your Honor, to see over that.

The Court: I think it would be better just to stand in front of the Court Reporter here and hold them up, because we don't have anything that would be of assistance.

Mr. Lipson: May the witness get off the witness stand for this purpose, your Honor?

The Court: Yes, certainly. Can't you do better than that board, Mr. Locker?

Mr. Esherick: If your Honor please, I will hold them up for the witness while he is explaining what they are.

The Court: Yes. You will be a good ——

Mr. Esherick (Interposing): I'm a good dummy, your Honor.

The Court: Yes, but I didn't say that.

A. Can the Jury see?

A Juror: Yes, I can

A. The lock belt is a two-part fastening device, not unlike [fol. 148] a nut and a bolt combination. It is used essentially for the same purpose, to fasten together, generally, metal structure.

The lock bolt pin is the bolt complement, and the lock bolt collar is the nut complement. During the installation cycle, the lock bolt collar is deformed or squeezed onto the threads of the lock bolt pin, such as to form a permanent lock between the two elements. The installation cycle permits this to be done very rapidly, and in a manner which is relatively unique in fastening devices.

The lock bolt pin, this is the metal element with a head on one end, and a cylindrical shank, which is the portion of the pin which fits the hole, into which the fastener is installed.

This group of threads you see here, marked No. 3, corresponds to the threads on a bolt, except that they have no lead angle. They are merely annular grooves.

The very deep groove you see, marked No. 6, is a groove that is provided on the lock bolt pin to permit this section, marked No. 4, to be broken off from the major section during the driving cycle. The grooves on the pintail section, so to speak, marked No. 4, are provided so that the driving tool can grab or grasp the pin during this installation cycle.

I will explain how the installation cycle works next.

[fol. 149] The collar, itself, is a supple tubular element having in this case, a bead on one end, and a bore through its center. The bore is approximately the same size as the outside diameter of the threaded portion.

Both elements are generally made of metal. For aircraft structure, the pin is made out of a heat treated alloy steel and the collar is generally of deformable aluminum, or it can be of a deformable steel. I think that is all with No. 1.

Mr. Pomeroy: Excuse me. Was that Exhibit No. 1 you were just testifying from?

A. Yes.

Mr. Lipson: Let the record show that Exhibit No. 2 is now being held up.

A. Exhibit No. 2 shows several things in the sequence of lock bolt installation. It shows first that there are two metal plates, as I have shown here marked No. 6, with a hole provided in the plates.

The pin is inserted through that hole from one side of the work, and the collar, marked No. 3, is applied over the extending pintail.

The sheets, as you see in No. 6, can have a substantial gap in them, as the lock bolt performs the function of pulling out a sheet gap.

The pin, as you see here in the hole, doesn't go all [fol. 150] the way into the hole, because the lockbolt has the facility of pulling itself into a hole through an interference fit, providing a very tight joint. This is one of the major features of the lock bolt, as I will explain later.

At No. 4, you will see a device which is intended to represent the chuck jaw portion of the driving tool which grabs onto the pintail section of the lock bolt.

The illustration at No. 5 is the swaging anvil section of the lock bolt nose assembly, driving tool section.

Now, the installation goes something like this: The lock bolt pin, No. 1, is inserted through the hole, No. 2. The collar, No. 3, is applied over the extending pintail, and the tool, including elements 4 and 5, is applied over the extending pintail, as well.

The tool is then actuated. By that, I mean a trigger is pulled and generally, air pressure will cause this tool to pull back on the pin through the chuck jaws at No. 4, and push on the swaging anvil at No. 5. This force causes the pin to be pulled into the hole through an interference fit, if that is required, and it causes the sheets to be pulled together, tightly in intimate contact. It further causes the swaging anvil, No. 5, to ride down over Collar No. 3, squeezing it into the grooves shown on Pin No. 1.

[fol. 151] If I can see Exhibit No. 3, I will show you the finish of it.

Mr. Lipson: Let the record show that Exhibit No. 3 is now being held up.

Exhibit 3 shows what happens just after the lock bolt has been installed. The anvil has moved down over the collar, squeezing the collar material into the annular grooves provided on the pin, shown at 5.

The sheets have been pulled tightly together; the shank of the pin has been pulled into the hole through interference fit; and the pintail has been broken off at No. 6. Now, this sketch would be complete if the anvil had been removed, which it does automatically at the conclusion of the driving cycle. This whole thing takes about a second to accomplish.

The resultant attachment is one having a pin with a very high shear strength, comparatively, installed in a very tight, close-fit hole, having pulled the sheets together very tightly and locked them together permanently, in a manner which can't be loosened except by destroying the fastening device itself.

The pintail, as shown at—with the jaws—at 3, is then ejected from the end of the driving tool and is no longer used. It is merely an activating device.

The completed lock bolt is the section shown at the left [fol. 152] of the exhibit, less the anvil marked No. 4.

Mr. Lipson: Thank you, Mr. Looker.

Q. (By Mr. Lipson, continuing): Do you have in your possession at this time any simple lock bolts, themselves?

A. Yes.

Q. Would you produce them, please?

A. Yes. (Witness complies.)

Mr. Lipson: Will you identify these, please?

(Thereupon two lock bolts with collars were marked for identification as Government Exhibits 4 and 5, respectively, by the Court Reporter.)

Mr. Lipson: I would like to show Exhibits 4 and 5 to defense counsel, for observation and possible objection.

Q. (By Mr. Lipson, continuing): Mr. Looker, I show you Government Exhibits 4 and 5, and ask you whether or not they are representative samples of lock bolts such as you have encountered in your work with Huck Manufacturing Company?

A. Yes, they are.

Q. With respect to Government Exhibit No. 4, would you show, by holding it up, the collar portion of the lock bolt as you have previously described it?

Mr. Haggerty: Just a moment. You haven't offered these in evidence yet and they haven't been received. I think we had better object——.

[fol. 153] OFFERS IN EVIDENCE

Mr. Lipson (Interposing): Your Honor, I offer these now as representative samples of lock bolts, as testified to by the witness.

The Court: Four and 5 you are talking about?

Mr. Lipson: Four and 5, your Honor.

The Court: Any objection?

Mr. Dickey: We have no objection to them as representative samples of some sizes and types, but they are not—they are not representative of all sizes and types.

The Court: Mr. Pomeroy?

Mr. Pomeroy: I would accept Mr. Dickey's statement on that, your Honor.

The Court: They may be received as samples.

Q. (By Mr. Lipson, continuing): I will show you Government Exhibit No. 4 and ask you to point or hold up the collar portion of the lock bolt, previously described?

A. (Witness complies.)

Q. I ask you to point to the head portion of the lock bolt, previously described.

A. (Witness complies.)

Q. Now, which of the—which is the pintail portion of the lock bolt? Would you point to that section?

A. (Witness complies.)

Q. And would you point to the break neck groove you previously mentioned?

[fol. 154] A. (Witness complies.)

Q. Would you please point to the annular grooves that were previously mentioned?

A. (Witness complies.)

Q. Thank you, Mr. Looker. I show you Government Exhibit No. 5 and ask you in what respect, if any, Government Exhibit No. 5 differs from No. 4. Do you still want to hold No. 4 for purposes of comparison?

A. Yes. Exhibit No. 5 is similar to No. 4, except that it is made of a heat treated alloy steel material. That is, the pin is, and the pin has a pin head or protruding head style, whereas Exhibit No. 4 has a flush or countersunk head. Other than that, they are representative samples of similar nature.

Q. Mr. Looker, may I ask what you—you mentioned—strike that.

Previously, you had mentioned something as to an aircraft lock bolt. Are they aircraft lock bolts or some other type of lock bolt?

A. I will have to look.

Q. What are you looking at? Will you explain it to the Jury, please?

A. I am looking at the countersunk head section of the exhibit marked No. 4. I know that exhibit marked No. 5, the lock bolt pin is an aircraft product. I am not certain [fols. 155-158] about the collar.

Exhibit No. 4 is also an aircraft lock bolt, that is manufactured for the purpose of sale to the airframe industry.

Q. May I ask you how you can identify one as an aircraft lock bolt as opposed to any other type?

A. Yes. The exhibit marked No. 4 is an aluminum lock bolt pin, which, when made for aircraft, has a 100 degree countersunk head. When made for other than aircraft use, the head is 90 degrees and it is easily discernible to a relatively-trained eye.

The exhibit marked No. 5, by the cross on the top of the head and by the head shape, is identifiable as a pin head, heat treated alloy steel aircraft type lock bolt pin.

Q. Thank you, Mr. Looker.

* * * * * * *

[fol. 159] OFFERS IN EVIDENCE

Mr. Lipson: Your Honor, prior to resuming questioning of Mr. Looker, I would like the record to move into—to offer the Government's Exhibits 1, 2 and 3, the sketches Mr. Looker testified from yesterday, for the purposes noted by your Honor.

Mr. Haggerty: I think they have been received.

The Court: No, he never formally offered them.

Mr. Haggerty: Yes.

The Court: But I made inquiry of yourself and there was no objection.

Mr. Haggerty: No objection.

The Court: For the purpose for which they are offered, and they may be received.

Mr. Lipson: Thank you, your Honor.

Direct examination. (Continued)

By Mr. Lipson:

Q. Mr. Looker, you understand that the oath took yesterday is binding on you?

A. Yes.

[fol. 160] Q. While you are on the stand?

A. Yes.

Q. Mr. Looker, yesterday you were in the process of describing to us the lockbolt mechanism and how it functions.

Mr. Lipson: I would like to make available for inspection to the defendants at this time, the Exhibits 6 and 7 which we previously had marked prior to the opening of Court this morning, for examination.

Q. (By Mr. Lipson) Mr. Looker, I show you Government's Exhibits marked 6 and 7, and ask you if you can identify what those exhibits are?

A. Government's Exhibit 6 consists of two aluminum plates which have been separated by aluminum spaces and attached together with a piece of tape on either end, there being a hole having been formed in the center of the section.

Q. And Government's Exhibit 7?

A. Government's Exhibit 7 consists of a similar structure, with a lockbolt attached in the center of the plates, showing the lockbolt in an installed condition, having pulled the plates together.

Q. Is there any relationship between 6 and 7, Mr. Looker?

A. Government's Exhibit 6 appears to be the type of demonstration plate that we used during my employment with the Huck Company, for showing the installation and pull together characteristics of the lockbolt itself. While

[fol. 161] Exhibit 7 shows the similar type plate, after installation.

Q. Thank you, Mr. Looker.

Mr. Lipson: Your Honor, at this time, I would like to offer as evidence, Government's Exhibits 6 and 7.

Mr. Dickey: No objection. It is my understanding that those exhibits are offered merely for illustration purposes.

The Court: That is true. Is that correct, counsel?

Mr. Lipson: That is correct, your Honor, to show the jury what a lockbolt looks like when installed.

The Court: Fine.

Any other objection?

Mr. Pomeroy: No objection, your Honor.

The Court: All right, it may be received.

Mr. Lipson: Thank you, your Honor.

Q. (By Mr. Lipson) Mr. Looker, one question about Government's Exhibit No. 7 before we proceed further in your examination.

What happened to the remainder of the lockbolt after it was set?

A. The extending pin tail would have been broken off and discarded in the normal lockbolt driving operation.

Q. Thank you.

Mr. Lipson: Your Honor, prior to opening Court this morning, the Government had marked for identification [fol. 162] a series of exhibits, 8, 9, 10, 11, 12 and 13; 14, 15 and 16. I now show Exhibits through 13—that is, 8 through 13 to defendants for examination.

Q. (By Mr. Lipson) Mr. Looker, I now show you Government's Exhibit No. 8, and ask you if you can identify what this picture purports to show?

A. Exhibit 8 appears to be a relatively typical lockbolt installation, showing lockbolts after installation and with the pin tails extending prior to installation. Such as you might find in an aircraft spar.

Q. You didn't take this actual picture, did you, Mr. Looker?

A. No. I did not.

Q. I show you Government's Exhibit No. 9, Mr. Looker. Can you identify that exhibit?

A. Exhibit 9 appears to be a photograph showing lockbolts in process of installation, with the pneumatic driving tool, apparently in process of installing a lockbolt.

Next to it, an extending pin tail of the second lockbolt ready for installation, and below it, installed lockbolt collars.

Q. I show you Government's Exhibit No. 10, Mr. Looker. Can you identify that exhibit?

A. Government's Exhibit No. 10 shows a lower roll of installed shear type aircraft lockbolts, with an upper roll of extending lockbolt pin tails and the man is shown placing [fol. 163] a shear lockbolt collar over what is an extending pin tail.

Q. Thank you, Mr. Looker. I show you Government's Exhibit No. 11, and ask you if you can identify that exhibit?

A. Government's Exhibit No. 11 shows another lockbolt in the process of driving the pneumatic tool having been applied to the extending pin tail. It appears that the lockbolt is apparently ready for installation at this time, or has just been installed, one or the other.

Q. Thank you. I show you Government's Exhibit No. 12, and ask you if you can identify that exhibit?

A. Government's Exhibit No. 12 shows what would appear to me to be a piece of aircraft structure, with a lockbolt pull tool on one side, and I can't make out what is on the other side.

Q. Thank you, Mr. Looker. And I show you, finally, Government's Exhibit No. 13, and ask you if you can identify what 13 represents?

A. 13 looks like a worker installing lockbolts on a spar cap; looks like a piece of aircraft structure, and this looks like a spar cap to me.

Q. Mr. Looker, while you were employed by the Huck Manufacturing Company, did you ever have occasion to deliver any lectures with respect to lockbolts and lockbolt installations at conventions?

A. I have, yes.

Q. On what occasions?

[fol. 164] A. On one occasion I delivered lectures to the Engineering Department of the Grumman Aircraft Engineering Company at Bethpage, Long Island, and on another occasion I delivered a lecture on lockbolts and bind rivet devices to a truck-trailer convention in Cincinnati, Ohio.

Those were the large audience lectures I recall at this time having delivered.

Q. Whom did you represent at those lectures?

A. Huck Manfacturing Company.

Q. Was that part of your duty?

A. Yes.

Mr. Lipson: Your Honor, at this time, the Government offers into evidence the exhibits previously identified by Mr. Looker as 8 through and including 13.

(Handing exhibits to counsel.)

Mr. Lipson: Your Honor, there being no objection—I hear no objection.

Mr. Dickey: Well, wait a minute. I take it that these are photographs that were not taken by the witness?

Mr. Lipson: I think we established that.

Mr. Dickey: Well, all right. And that he didn't see them taken, that he wasn't present where they were taken, and that they are illustrative, merely of the way of installing the lockbolt.

Mr. Lipson: They are offered for that purpose.

[fol. 165] Mr. Dickey: And there is no evidence here that it is a photograph of an actual operation that is on some aircraft or product that was in the course of manufacture during this installation.

The Court: The witness testified that it apparently was.

Mr. Lipson: Yes, Mr. Dickey, it is exactly what Mr. Looker did testify to.

Mr. Dickey: Well, Mr. Looker wasn't present. My point is this, I have no objection to their admission as illustrative of an installation of a lockbolt. I just want to get them characterized that way. That it is no operation that this witness either saw or carried on himself. He is testifying from his knowledge or memory or familiarity with the installation of lockbolts.

The Court: It is received for that purpose alone.

Mr. Lipson: Your Honor, if there exists any problem at all with respect to the authenticity of the device—the photographs that we are referring to, we have in the court room, the actual photographer, and we are ready and willing to put him on the stand to testify to that, and since

Mr. Dickey does have these reservations, we reserve our right to put the photographer on the stand.

The Court: All right. They may be received at the moment, subject to—for the purposes indicated.

[fol. 166] Mr. Lipson: Thank you, your Honor.

Your Honor, because of the nature of the product involved, it sometimes appeared to me to be confusing personally until I was able to see a photographic reproduction or an actual reproduction.

The Court: I have no objections to the way you are proceeding.

Mr. Lipson: Can I, with your permission, show these photographs to the members of the jury at this time for purposes of understanding what has already been testified to by Mr. Looker, and for the remainder of Mr. Looker's testimony?

The Court: Any objection?

Mr. Dickey: No objection.

The Court: Start them all down——

Mr. Lipson: (Interposing) Just start at one end, I suppose. They are in reverse order, let me straighten out the order for you.

(Whereupon, the exhibits were handed to the jury.)

Mr. Lipson: Your Honor, with the Court's permission, as long as the jury is, at this time, viewing the photographs, would it be an appropriate time to have them look at the other exhibits of tangible evidence already introduced?

The Court: They may have them.

Mr. Lipson: Thank you, your Honor. Let the record [fol. 167] show that I am showing four—Government's Exhibits 4 and 5 to the jury.

(Whereupon, the exhibits were handed to the jury.)

[fol. 168] The Court: I believe we're ready; aren't we?

Mr. Lipson: I believe 6 and 7 are still being viewed by the Jury, your Honor.

Thank you.

Q. (By Mr. Lipson, continuing): Mr. Looker, how many men are required to install a lockbolt?

A. Either one or two.

Q. Would you describe how a one-man operation works?

A. Yes. The pins are put in from one side of the work and then, the man either reaches around or travels around to the outside of the work and drives the collars from the extending pintail side.

Q. How does this differ from a two-man operation?

A. In a two-man operation, the man puts the pins in from one side and the man on the opposite side applies the collars to the extending pintail, and the driving tool performs the driving operation from the second side of the work.

Q. Were you concerned with these installation tools while you were with Huck?

A. Yes.

Q. In what capacity?

A. Capacity to insure an adequate supply and that they functioned properly for the benefit of the sale of the company's product.

Q. Do you know the estimated cost of these installation tools?

[fol. 169] A. Well, they vary from around $300 to about eight hundred.

Q. Who manufactures the installation tools?

A. Well, there are a series of them that are manufactured by the Chicago Pneumatic Tool Company of New York City, and some are manufactured by the Townsend Company, and some are manufactured by the Huck Manufacturing Company.

Q. At the time you left your employ with Huck Manufacturing Company, who were the manufacturers of these tools?

A. The Chicago Pneumatic Tool Company and the Huck Manufacturing Company.

Q. Mr. Looker, what is the difference between a commercial lockbolt and an aircraft lockbolt? Would you explain that to the Jury, please?

A. Yes. The commercial lockbolt is in all practical or appearance sake identical to the aircraft lockbolt, except that it is manufactured for other than use in aircraft application. Some of the differences are it is manufactured of a generally lower strength and lower cost material.

Q. Is there any difference in price between an aircraft lockbolt and a commercial lockbolt?

A. Yes.

Q. What is that difference?

A. Very substantial difference between the two.

Q. Where would the difference lie, in which direction?

[fol. 170] A. The aircraft lockbolt, to the best of my memory, is about twice the cost of a commercial lockbolt for a comparable size and diameter.

Q. Mr. Looker, what firms manufacture lockbolts?

A. What——

Q. (Interposing): What companies?

A. What companies?

Q. What corporations?

A. Huck Manufacturing Company and the Townsend Company.

Q. While you were vice-president in charge of sales at Huck Manufacturing Company, did you have any way of determining what share of the lockbolt market Huck had as to what share of the lockbolt market Townsend Company may have had?

A. Roughtly, yes.

Q. What was the basis for you ability to make this determination? On what did you——

A. (Interrupting): My determinations were made on royalty statements from the Townsend Company to the Huck Company.

Q. Do you recall the comparable shares of the market held by each company?

Mr. Haggerty: Well, I object to it, unless we specify a time now.

Mr. Lipson: I asked at that time while he was vice-president.

Mr. Haggerty: Well, I don't mean "at that time." [fol. 171] I mean for what years now.

The Court: From the beginning——

Q. (By Mr. Lipson, continuing and interposing): The period through 1954 through 1956?

A. 1954, there was almost negligible Townsend sales. In 1955—I am not certain of 1955. When I left, it seemed to me that the ——

The Court: Wait a minute.

Mr. Haggerty: I object to what it seemed——

A. (Interrupting): In September.

Mr. Haggerty: Just a moment.

A. Oh.

Mr. Haggerty: I object to what it seemed to him or his imagination.

A. I can't testify to the sales.

Q. (By Mr. Lipson, continuing): Mr. Looker, are you testifying from your recollection or——

A. (Interrupting): Yes. I can't testify to any knowledge or recollection of the Townsend participation in the lockbolt market in 1955. However, at the time I left the Huck Company in September or August of 1956, my recollection is that the Townsend Company enjoyed between 10 and 15 per cent of the total market for lockbolt sales.

Q. And the remainder, I take it from your earlier testimony, was Huck's?

[fol. 172] A. That is correct, yes.

Q. What industry was the primary customer for lockbolts?

A. The airframe industry.

Q. What other industry bought and used lockbolts?

A. The largest other single user were—was the industry that was engaged in the manufacture of truck trailers and truck bodies, if you consider that to be one industry.

Q. Were there any other construction industries, construction-type industries that used lockbolts?

A. By construction, do you mean building construction or fabrication of parts?

Q. Fabrication?

A. Fabrication. The bus industry, to some extent, utilized lockbolts. The railroad industry, to some extent, utilized lockbolts in the construction of passenger cars, and during the latter part of my employment in the construction of freight cars, to some extent.

Q. Mr. Looker, do you have any recollection of the names of the individual customer companies, some of the more prominent customer companies?

A. Aircraft or commercial, or both?

Q. In both fields?

A. The prominent aircraft customers were the Republic Aircraft Company, the Lockheed Aircraft Company, Doug-

las Aircraft Company, Boeing Airplane Company, Con-
[fol. 173] solidated-Vultee Aircraft Company, Convair.

Q. Do you recall the names of any firms in the other industries?

A. Yes. The most prominent non-aircraft customer during the latter period of my employment was the Fruehauf Trailer Company. Other typical non-aircraft customers during that same late period of employment were the Trailmobile Company, Wayne Works in Richmond, Indiana, builder of school buses.

Q. Were there any government sales, to your knowledge?

A. Yes.

Q. What installations or what institutions?

A. Government sales were made to each of the Government branches concerned with the maintenance of their aircraft. That was the large Government sale.

Q. Just for the record, Mr. Looker, can you tell me where Fruehauf was located at the time of this——

A. (Interrupting): Fruehauf had three factories, to the best of my recollection. One in Memphis, Tennessee; one in Avon Lake, Ohio; and one in the Los Angeles area.

Q. Did you sell to all three or just to one of those?

A. Beg your pardon?

Q. Did you sell to all three of Fruehauf's plants, or to selective——

A. (Interrupting): We sold to all three.

Q. Can you tell us where there was another one located?

[fol. 174] A. There was one located in Massachusetts, I believe.

Q. Can you tell us where Boeing is located?

A. We sold lockbolts to Boeing primarily at its major manufacturing works in Seattle, Washington, and also, to its Wichita factory in Wichita, Kansas.

Q. And where to Douglas?

A. To Douglas at its plant in Santa Monica, California; Long Beach, California; Tulsa, Oklahoma, to my present memory.

Q. And just one for Lockheed?

A. Lockheed, to its plant in Burbank, California, and also to its plant in Marietta, Georgia.

Q. Thank you. Do you have any recollection at all of the dollar value of sales at the time you left Huck Manu-

facturing Company applicable to lockbolts, that is, lockbolt sales?

A. It seems to me that it was somewhere around $4,000,000 for the Huck Manufacturing Company.

Q. During the period of your employ with Huck Manufacturing Company, was there a trend, noticeable trend, either upward, downward, or in any other conceivable direction, with respect to the sales of lockbolts?

A. Noticeable trend upward.

Q. Starting from what period of time?

A. Starting from the date that the lockbolts were first placed on the market.

[fol. 175] Q. And what date was that?

A. Around 1947, shortly after my employment with the company.

Q. Thank you. Mr. Looker, prior to the year 1952, how did Huck Manufacturing Company go about establishing the price for which lockbolts were to be sold? How were these items priced? What was the routine in Huck?

A. The procedure was that the company's president, Lewis Huck, gathered cost data on the production of lockbolts, including materiel costs, heat treatment costs, cost of coldheading, contuor rolling, and all of the various direct costs connected with the production of the part and established the additional factors normally applicable to such cost, for the computation of a selling price, such as factory burden and general and administrative expenses and profit. These computations, prior to his death in 1952, were made by himself.

Q. To what extent did this situation change after 1952? That is, after Mr. Huck's death in 1952?

A. A man by the name of Paul Pelletier was hired by the company and I don't know when he was hired. He was hired by the company for the purpose of establishing selling prices for the lockbolt devices and the installation devices as well.

Q. Did Mr. Pelletier establish these prices or did someone else do it?

A. Mr. Pelletier recommended price establishment to [fol. 176] Mr. Armour, who had the final authority for the establishment of prices.

Q. Is that the same Mr. Armour we have referred to earlier in these proceedings?

A. Yes.

Q. Mr. Looker, have you or did you, when you were employed by Huck Manufacturing Company, ever have any occasion to visit the production facilities of Townsend Company?

A. Yes.

Q. Do you recall the approximate time of the first occasion that you had to visit these facilities at Townsend?

A. It was prior to the death of Mr. Huck.

Q. In about what year approximately?

A. Approximately, 1951.

Q. With whom did you go?

A. I travelled to the Townsend Works in Beaver Falls, Pennsylvania, with Mr. Huck.

Q. Do you recall anything specific about how you got there?

A. Yes. We travelled in his private plane.

Q. Do you recall the purpose for your visit?

A. Yes. We travelled to the Townsend Company to discuss matters relating to a potential lockbolt patent license agreement with the Townsend Company.

Q. Was there anyone else accompanying you from Huck?

A. I am not certain.

Q. Mr. Looker, how—are you familiar with the facts [fol. 177] preceding this trip to Townsend Company that made it desirable, or necessary to make the trip?

A. Yes, I am.

Q. What were those facts?

A. The Townsend Company had expressed interest in engaging in the manufacture of lockbolt devices and had proceeded to manufacture and offer for the market for sale of lockbolt devices.

Q. Are you aware of any contacts between Townsend Company and Huck Manufacturing Company preceding your visit?

A. Yes. Mr. Huck had told me of discussions he had with Mr. Fred R. Dickenson, concerning this subject.

Q. Were you aware of the activities that Townsend Company had at that time in the lockbolt manufacturing field?

A. To some extent, yes.

Q. To what extent?

A. To the extent that I was aware of the fact that they had offered for sale a lockbolt device.

Q. Do you know any particular customers to whom they had offered this for sale?

A. They had offered for sale a commercial lockbolt to the Fruehauf Trailer Company for the construction of an Army Ordnance trailer vehicle.

Q. Did they offer, to your knowledge did the Townsend Company ever offer lockbolts for sale to any aircraft manufacturer?

[fol. 178] A. They did, yes.

Q. Which manufacturer?

A. I am not certain of that.

Q. Where was it located; do you know?

A. Yes. The activity of the Townsend Company, to my knowledge, was located in the California area, and——

Q. (Interposing): You say the activity of the Townsend Company. Which activity are you referring to, the sales or manufacturing?

A. The sales. The sales activity in their early production to the aircraft industry, I believe, at least to my own present knowledge, occurred in the Southern California area.

Q. Are you aware of any attempts by Lockheed to sell—strike that—by Townsend to sell to any aircraft manufacturers?

A. I am, yes.

Q. What was that incident?

A. The Townsend Company offered for sale an aircraft lockbolt product to Consolidated-Vultee Company at Fort Worth, Texas.

Q. How did you come to learn of this?

A. I travelled to the—to that company with Mr. Huck, as soon as Mr. Huck told me that that offer had been made, and that the Consolidated-Vultee Company had engaged in the purchase of lockbolts manufactured by the Townsend Company.

[fol. 179] Q. Did you have any discussions with any people at Consolidated-Vultee at that time?

A. Yes, we did.

Q. Do you remember any names of these people, their positions with Consolidated-Vultee?

A. The principal negotiator for the Consolidated-Vultee Company was there. I believe his title was Purchasing Agent. His name was Henry Jones. We had discussions with him; we had discussions with a buyer by the name of Pratt, P-r-a-double t. We talked to as many as 15 or 20 people of that company, and I don't remember anybody else's name, except a few.

Q. Do you recall the general subject matter of these conversations?

A. Yes.

Q. What was it?

A. The purchasing agent Mr. Henry Jones, had advised Mr. Huck that——

Mr. Pomeroy (Interposing): If your Honor please, I object to this as being incompetent, irrelevant and immaterial, on the ground that it is hearsay, and I object further on the ground that it is before the period of the indictment and therefore, incompetent.

Mr. Lipson: May I be heard, your Honor?

The Court: Yes.

Mr. Lipson: With respect to the fact that it is prior [fol. 180] to the period of the indictment, I believe the Government is obligated, and certainly has a right to show the events leading up to the alleged illegal agreement stated in the indictment.

The Court: That is true, but what about the objection?

Mr. Lipson: I will consent to having Mr. Looker's last statement stricken on the basis of Mr. Pomeroy's objection.

Q. (By Mr. Lipson, continuing): Mr. Looker, will you confine yourself to the discussions you had with the people at Consolidated-Vultee?

Mr. Pomeroy: I object to that, also.

The Court: You may answer.

A. All right. Would you repeat the question, please?

Mr. Lipson: would the reporter please read back the last question?

The Court: Maybe you had better reframe it, because it is kind of confusing.

Q. (By Mr. Lipson, continuing): Do you recall the general subject matter of the discussions you had at Consolidated Vultee at that time?

A. Yes.

Q. Would you relate to the Jury the nature of those discussions that you had?

[fol. 181] A. Yes.

Mr. Pomeroy: I renew the objection, if your Honor please.

The Court: All right. He may answer.

A. The Purchasing Agent, Mr. Henry Jones, had advised Mr. Huck and myself——

The Court: The nature of the discussions is the thing.

Q. (By Mr. Lipson, continuing): The nature of the discussion.

A. The nature of the discussions?

Q. What did you talk about?

A. We discussed lockbolt procurement and quality.

Q. Do you recall any specific conversations?

A. Yes.

Q. Would you relate the conversations you do recall?

A. The first conversation I recall was shortly after arriving with Mr. Huck, in Mr. Jones' office, and Mr. Jones at that time indicated that——

Mr. Haggerty (Interposing): I object to what he indicated.

Mr. Pomeroy: I object, renew my objection.

The Court: Sustained.

Q. (By Mr. Lipson, continuing): Do you recall the language used by Mr. Jones at that time?

A. Not exactly, no.

[fol. 182] Q. Do you recall the substance of what he said?

A. I do.

Q. Would you relate the substance of what he said?

A. The substance of Mr. Jones' comments——

Mr. Pomeroy (Interposing): If your Honor please, I would like to object. I hate to stand on my feet every other question, but I must object.

The Court: Sustained.

A. The subject of Mr. Jones'——

The Court: Sustained. The objection is sustained to any conversation; that is, anything he said to you has been objected to and sustained by the Court.

A. Yes, sir.

Q. (By Mr. Lipson, continuing): What did you say to Mr. Jones?

The Court: Can't we get this in by what the purpose of the call was?

Q. (By Mr. Lipson, continuing): Mr. Looker, what was the purpose of the visit to Consolidated-Vultee at that time?

A. To discourage the Consolidated-Vultee Company from the continued purchase of lockbolt devices from the Townsend Company.

Q. I would like to go back to the meeting—strike the word "meeting"—to the visit you said you had at the Townsend Company in 1951.

A. Yes.

[fol. 183] Q. Do you recall who you met with, whom you met with at that time?

A. Yes, I do recall.

Q. What are the names of those persons?

A. Mr. Huck and I met with Mr. Dickenson.

Q. Would you identify Mr. Dickenson's position?

A. Yes. Mr. Dickenson was the president of the Townsend Company.

Q. Is he here in the Courtroom?

A. Yes, he is.

Q. Would you point to him, please?

A. Yes, right there (indicating).

Q. Thank you. Was there anyone else beside Mr. Dickenson?

A. There were—there were other people at that meeting, yes.

Q. Do you recall any of their names?

A. No, I do not.

Q. Mr. Looker, would you indicate more directly who Mr. Dickenson is?

A. Mr. Dickenson is the gentleman in glasses and the striped tie.

Mr. Pomeroy: Stand up, Mr. Dickenson, so there won't be any mistake.

Q. (By Mr. Lipson, continuing): Thank you, Mr. Looker. Do you recall any conversations you had with any of the people of Townsend Company at that meeting in 1951 at that time?

[fol. 184] A. I don't recall the identical, or the actual conversations, other than occasional remarks, perhaps. I recall the substance of the conversations only.

Q. Well, what was the subject matter of the conversations?

A. The subject matter was a proposed patent license agreement between Huck Manufacturing Company and the Townsend Company.

Q. Did you have occasion to take a tour of the Townsend production facilities at that time?

A. Yes.

Q. Were you accompanied by anyone that you recall?

A. Yes. Mr. Dickenson took Mr. Huck and myself on a tour of the facilities of that company.

Q. After you had completed this tour, do you recall having any conversations, further conversation with Mr. Huck concerning that tour?

A. Yes.

Mr. Haggerty: Well, just a moment. I believe Mr. Huck is not a party in this case; he is not a co-conspirator. Mr. Huck is deceased, and this happened back in '51.

Now, any conversation that this man had with Mr. Huck is certainly not admissible under any theory of law, not even to show intent, pattern, design or motive.

Mr. Lipson: May I be heard, your Honor?

[fol. 185] The Court: Yes.

Mr. Lipson: Mr. Huck was president of the defendant corporation and as such we believe that defendant corporation is bound by what he has said. That is all.

Mr. Haggerty: It could only be—it could only be for the purpose of showing motive, intent, design and so forth. It could not have any probative value in this case.

The Court: I think this is purely preliminary, leading up to that which happened during the—the charge during the

period of the conspiracy. I assume that to be the situation?

Mr. Lipson: Yes, your Honor.

The Court: You may proceed.

Mr. Lipson: And it is also intended to show motive, as Mr. Haggerty pointed out.

Q. (By Mr. Lipson, continuing): What did Mr. Huck tell you?

A. Mr. Huck told me, after having completed the tour previously testified to, that the Townsend Company appeared to have substantial production capacity for the production of lockbolts; that they were, in his opinion—this is what he told me.

Q. This is exactly what we are asking for, Mr. Looker.

A. That they were what he called a barnyard rivet company; that their costs were extremely low in comparison to [fol. 186] the costs of the Huck Manufacturing Company's production in the City of Detroit; and that there was very little likelihood at this time that the Huck Company and the Townsend Company would enter into a patent agreement. That's about it.

Mr. Haggerty: Well, then, may it please the Court, I ask that this conversation be stricken as incompetent, irrelevant and immaterial.

The Court: It may stand.

Mr. Lipson: Thank You your Honor.

Q. (By Mr. Lipson, continuing): Do you recall any conversations or any statements made by Mr. Fred Dickenson to you or in your hearing at the time you were in Townsend Company's facilities on this visit?

A. Yes, I do.

Q. What were those statements?

A. The one direct quotation I remember most specifically is that he said to Mr. Huck and myself, at two or three different points in the negotiation, that quote—we're already in the business—unquote.

Q. Were there any meetings—after you—I take it you left the Townsend Company after awhile and returned to Detroit; is that so?

A. That is correct.

Q. After you returned to Detroit, were there any de-

[fol. 187] cisions made with respect to this license request, decisions at Huck Manufacturing Company?

A. Yes, there were decisions made.

Q. By whom?

A. By Mr. Huck.

Q. What was the decision?

A. The decision was not to grant the Townsend Company a patent license.

Q. Mr. Looker, following that point in your testimony, was there any litigation between the two companies, to your knowledge?

A. Yes, there was.

Q. Would you relate to the Jury the nature of that litigation, what it was about?

A. Huck Manufacturing Company filed suit against the Townsend Company for infringement, well, of its patents controlling the construction and manufacture and sale of lockbolt devices.

Q. What responsibility did you personally have with respect to this lawsuit?

A. I worked as a principal company employee with the attorneys who represented the Huck Company in the prosecution of that lawsuit.

Q. Where was the suit tried?

A. In Los Angeles, California.

[fol. 188] Q. Did you participate in the course of the trial at all, in any capacity?

A. Yes.

Q. In what capacity?

A. I assisted in the preparation of the demonstrations that were conducted in that Courtroom and I testified at some length.

Q. Mr. Looker, who won the lawsuit?

A. The judgment was handed down by that Court in favor of the Huck Manufacturing Company.

Q. Are you aware of whether or not any appeal was taken from that judgment?

A. Yes, I am.

Q. Was there or was there not——

A. (Interrupting): Yes, an appeal to the judgment was taken by the Townsend Company.

Q. Do you recall the approximate date, to the best of your recollection, of course, when this lawsuit ended?

A. It seems to me it was around Christmastime, 1952. At least, that is the time that the Judge handed down his decision.

Q. Thank you. After the Judge in California handed down his decision, were there any negotiations opened between Huck and Townsend with respect to a lockbolt license?

A. Yes.

Q. When did they open and under what circumstances? [fol. 189] A. Early in 1954, Mr. Armour told me that he had received a telephone call from Mr. Dickenson requesting a patent license, and requesting that I study the request in light of possibly making a recommendation.

Q. Do you recall whether this was before or after the appeal had been filed?

A. Yes. It was after the appeal had been filed.

Q. You are not a lawyer; are you, Mr. Looker?

A. No.

Q. How is it that—well, strike that. What was the nature of your position in Huck that Mr. Armour would have confided in you about this possible patent license?

A. Well, since the death of Mr. Huck, I had been charged with supervising the company's patent matters in conjunction with its attorneys. I didn't do the patent work myself, but I insured that is was done for the benefit of the company.

Q. Were there any meetings among the officials of Huck Manufacturing Company with respect to the opening of these negotiations, as you stated?

A. There was a meeting at which we decided that we would license the Townsend Company, yes.

Q. Do you recall who attended that meeting?

The Court: And when.

A. To the best of my memory, the meeting took place [fol. 190] sometime in May of 1954, and was attended by Mr. Armour, Mr. Benkert, and myself, and there may have been others, but I don't recall them.

Q. Do you recall whether there were any earlier meetings than that?

A. Well, I had met with Mr. Sterritt on many occasions discussing this general subject.

Q. Would you identify Mr. Sterritt? Who is he?

A. Yes. Mr. Sterritt is or was the patent attorney for the Huck Manufacturing Company.

Q. Would you identify Mr. Benkert? I believe you used his name as a member of this place?

A. Yes. Mr. Benkert was executive vice-president of Huck.

Q. When did he become executive vice-president?

A. Shortly after the death of Mr. Huck.

Q. Had he been employed with Huck before that?

A. Yes.

Q. In what capacity?

A. He was the Company's Treasurer.

Q. Do you recall the subject matter of the discussion?

A. Yes. We discussed the pros and cons of issuing a lockbolt license, first; and secondly, issuing a lockbolt license to the Townsend Company.

The Court: Excuse me.

Q. (By Mr. Lipson, continuing): Do you have any recollection——

[fol. 191] The Court: Excuse me. Does this have relation to the May meeting or previous discussions with Mr. Benkert and Mr. Sterritt?

A. This is with respect to the May meeting, your Honor.

The Court: All right.

Q. (By Mr. Lipson, continuing): With respect to the May meeting, do you recall any specific subjects that were discussed at the May meeting?

A. We discussed the pros and cons of issuing a lockbolt license and the effects of issuing such a license to the Townsend Company.

Q. Do you recall whether there was any discussion about price in that meeting?

A. Yes.

Q. Would you relate to the Jury the nature of that discussion about price?

A. Yes. There was a great concern about price.

Mr. Haggerty: I object to "concern", as calling for a conclusion.

The Court: Well, that may stand, but I would like to know who is talking. Who expressed the "concern"?

Q. (By Mr. Lipson, continuing): Would you try to identify the——

The Court: Who was the person that indicated concern, and what was the——

[fol. 192] A. (Interrupting): I had great concern about price.

The Court: All right.

A. And I expressed that concern to others. I also expressed the—my knowledge that the Townsend Company was capable of producing the lockbolt product at a cost lower than the Huck Company and therefore, an inherent concern with our ability to sell lockbolts with a lower-cost competitor, and I expressed that concern to those at that meeting.

Q. Now, at that same meeting, was there any discussion about the subject of Townsend's appeal in the patent suit, that your have just described?

A. Yes, there was.

Q. What was the nature of that discussion and who discussed it, to the best of your recollection? Who said what?

A. To the best of my recollection, I carried most of the points of the meeting, having prepared a memorandum before having gone—before going into that meeting, on these various points.

The appeal of the Townsend Company against the Lower Court's decision had not been heard. It was to—I expressed the opinion that it was to the Huck Company's interest to not have that appeal heard, because the Appellate Court could have declared each of the patents in suit invalid, and it could have declared that the Townsend Company had not, in effect, infringed the claims of those [fol. 193] patents.

Q. Mr. Looker, at that same May meeting, was there any discussion about the possibilities of patent re-development?

Mr. Pomeroy: I beg your pardon, possibilities of what?
Mr. Lipson: Patent redevelopment.
Mr. Pomeroy: Patent redevelopment. Thank you.

A. There were such discussions, yes.
Q. (By Mr. Lipson, continuing): Would you relate to the Jury the nature of these discussions?

Mr. Haggerty: Again, who said what.

A. Yes. I had been advised by Mr. Sterritt in the earlier meetings that the danger that the Huck Company faced, principally, in dealing with the Townsend Company was their desire to enter the lockbolt market field, whether there be Huck patents or not and whether or not those patents be valid, and that Mr. Sterritt expressed the opinion to me that the Townsend Company was going to enter the lockbolt business one way or another, and that it was to Huck's interest to license them, to keep the Townsend Company from developing a lockbolt-type product around the existing lockbolt patent claims.
[fol. 194] Q. Mr. Looker, was there any discussion at that meeting about the need or desirability of a second source?
A. Yes.
Q. Do you recall any of the discussions about that topic?
A. Yes.
Q. Would you explain to the jury what is meant by the term "second source", what the nature of the discussions were?
A. A second source, to the discussion here, second manufacturer, so that the company's products could be purchased by our customers from two different companies. The Douglas Company had complained to us and to Mr. Minor and to myself.
Q. Will you identify Mr. Minor, please?
A. Mr. Minor was the West Coast District Manager, working directly under me at that time.
Q. Would you continue please?
A. Yes. The Douglas Company had complained that our—the Huck Company's delivery reliability was not such as to savor the continuation of a single source product, and that the Douglas Company requested that we supply or furnish or see to it that it had a second source for the procurement of lockbolt devices.

Q. Do you recall whether Mr. Armour participated actively in this meeting, or whether he merely attended the meeting?

A. To the best of my recollection, he did participate actively.

Q. Now, when you say "participate actively", what do you refer to?

[fol. 195] A. Well, he entered into the discussions with the others present.

Q. Do you recall how long this meeting lasted?

A. I do not.

Q. Do you recall whether it was a very long meeting or a very short one?

A. I don't recall.

The Court: Maybe this would be a good time to take a recess.

Mr. Lipson: I think it would, your Honor.

The Court: Ten minutes, please.

(Whereupon, at 10:35 o'clock A.M., a recess was taken.)

[fol. 196] AFTER RECESS

(Whereupon, the jury returned to the court room at 10:55 o'clock A.M., and the trial of the above-entitled cause continued.)

ROBERT LOOKER, a witness called on behalf of the Govovernment, having been previously duly sworn, then resumed the stand, and testified further upon his oath, as follows:

The Court: Go ahead.

Mr. Lipson: Thank you, your Honor.

Direct examination (Continued)

By Mr. Lipson:

Q. Mr. Looker, I would like to remind you that you are still under oath.

A. Yes.

Mr. Haggerty: Just a moment. Your Honor, what is the purpose of this extraneous statement?

The Court: None. The gentleman is quite formal. I do not think there is anything intentional in this matter.

Mr. Haggerty: Well, I think if you repeat it, it could be prejudicial.

The Court: It might, but I do not think so at this time. [fol. 197] You need not repeat it.

Mr. Lipson: Thank you, your Honor.

Q. (By Mr. Lipson) Mr. Looker, referring again to the May meeting that you previously told us something about, was there any discussion at that May meeting about a late delivery problem?

A. Yes.

Q. What was the nature of that discussion, and to the best of your ability and to the best of your recollection who said what?

A. I called the attention—I called attention to the group that the Douglas complaint, previously testified to, was fundamentally based on relatively unreliable delivery situation which the Huck Company had at the time with respect to production and delivery of lockbolt devices.

Q. Was that the extent of the conversation, or discussion about that late delivery problem?

A. I think there was further discussion. As I remember it, the deliveries of the company's lockbolt products were running somewhere between six and eight weeks after receipt of order, which the Douglas Company found untenable and others also found untenable, and that this was a fundamental reason for the Douglas Company requesting us to establish a second source.

Q. Thank you, Mr. Looker. At about that period of time, [fol. 198] May, 1954, or in the preceding months, did Huck Manufacturing Company give any consideration to licensing any other firm, except Townsend Company?

A. For the manufacture and sale of lockbolts?

Q. That's correct.

A. Yes.

Q. What was this other firm?

A. The other firm was a company named Illinois Tool Works.

Q. How far did any negotiations go in that attempt or in that instance?

A. Well, negotiations——

Mr. Haggerty: (Interposing) Just a moment, I object to it unless they have a time now when these negotiations were carried on with Illinois.

Mr. Lipson: I will.

The Court: All right.

Mr. Lipson: I will elicit that now, your Honor.

Q. (By Mr. Lipson) When did these negotiations take place?

A. Sometime during the year 1953.

Q. Do you recall the individuals who participated in these negotiations, their names?

A. Yes, Mr. Sterritt, of the firm Harness, Dickey and Pierce, representing the Huck Company, myself, and for the Illinois Tool Works a Mr. Gene Fuller.

Q. What was the result of this negotiation?

[fol. 199] A. A lockbolt license was not entered into between the two companies.

Q. When did negotiations actually commence between Huck and Townsend Company for a lockbolt license?

A. Shortly after the May meeting previously testified to.

Q. In what year was that?

A. 1954.

Q. What form did these negotiations take? Were they telephone conversations, or letters, or meetings or combinations of any of those?

A. There were memoranda prepared by and between Huck, myself and Mr. Sterritt, and there was one meeting that I recall that took place in negotiations.

Q. Do you recall any meeting that may have taken place in about the month of June, or conceivably in the month of July, in the year 1954, here in Detroit?

A. Yes, I do.

Q. Do you recall who was present at this meeting?

A. Those that were there that I specifically remember at this time are Mr. Sterritt, of the firm Harness, Dickey and Pierce, Mr. Armour, Mr. Dickenson, myself and Mr. Tom Johnson, representing the Townsend Company, from a legal capacity.

Q. Now, is this the first meeting that you have a recollection of in connection with this phase of the negotiations? [fol. 200] A. Yes, that is correct.

Q. Do you know of any earlier meetings?

A. I don't remember any.

Q. Now, where did this meeting take place?

A. It took place in the offices of Harness, Dickey and Pierce, in the General Motors Building of this city.

Q. Will you identify Harness, Dickey and Pierce, I am not sure that is in the record.

A. Harness, Dickey and Pierce is a law firm located at 7-141 General Motor Building, in this city.

Q. Whom did they represent?

A. They represent, among others, the Huck manufacturing Company.

Q. Do you recall in which particular office of that firm's suite the meeting took place?

A. Yes, it took place in Mr. Harness' office.

Q. Was Mr. Harness present at that meeting?

A. No, he was not.

Q. Do you have any recollection of why Mr. Harness' office was used instead of any other?

A. Yes, there were several people there and Mr. Sterritt moved it to Mr. Harness' office, because it was a bigger office.

Q. Would you describe the general shape and size of Mr. Harness' office, as you recall it?

A. It is a large office, with windows on two sides, oh, [fol. 201] perhaps twenty by twenty feet square.

Q. Do you recall generally the type of furnishings in the office?

A. I picture it, yes.

Q. What kind of furnishings were in the office?

A. Usual leather chairs, and there was a couch on one side by the—by a window, or lower chair section, I am not sure which, and a large desk in one corner.

Q. Do you recall how the parties—strike that.

Do you recall how the people who attended this meeting arranged themselves? How they were seated?

A. The best I recall, Mr. Sterritt was sitting at Mr. Harness' desk, and Mr. Dickey and Mr. Johnson—Mr. Dickenson and Mr. Johnson—correction—Mr. Dickenson and Mr.

Johnson were sitting on the side of the room opposite the door, and Mr. Armour and I were on the opposite side of the room, and I was nearest the door, that's my present recollection.

Q. Do you recall where anybody else may have been seated in that room?

A. I don't recall, no.

Q. Did you say that Mr. Benkert had or had not attended this meeting?

A. I can't testify to that. I don't know.

Q. What was the purpose of this meeting?

[fol. 202] A. To negotiate the lockbolt license the company had intended to enter into.

Q. Were you there throughout the meeting?

A. Yes.

Q. Did you leave the meeting at any time at all?

A. Not to my memory.

Q. In what manner was the meeting conducted, what format was used?

A. Mr. Sterritt lead the meeting, bringing out first in each case points of the proposed license agreement which the Huck Manufacturing Company wanted in the agreement, and after each of the points brought out by Mr. Sterritt, discussion was held, if any discussion was in order.

Q. Do you have any recollection of any of these points, as you say, that were discussed?

A. Matters of prices were discussed. May I take a moment to think about this answer, please?

Q. Please do.

A. A period of exclusivity was discussed. Improvements to the lockbolt devices were discussed. The matter of royalties was discussed. The matter of audit of royalties was discussed. The matter of patent validity was discussed. And termination was discussed.

That is all I can remember at this time.

Q. Do you recall the nature of the discussion with respect to price?

[fol. 203] A. Yes, I do.

Q. Would you relate the nature of that discussion, to the best of your ability, identifying who said what?

A. In the early part of the meeting, the matter of price was discussed to the effect that the companies——

Mr. Haggerty: (Interposing) Well, I object unless it is indicated now who is speaking.

The Court: Sustained.

Q. (By Mr. Lipson) Will you please indicate, to the best of your recollection, who said what?

A. Mr. Sterritt brought up the point of the agreement, stating, as best I can recall, that the Huck Company wanted a price maintenance provision in the lockbolt patent license to extend for a two year period.

Q. Do you recall——

A. (Interposing) Which provision was accepted by Mr. Dickenson.

Q. Well, what did Mr. Dickenson say, can you recall?

A. Words to the effect that that is all right with me.

Q. Do you recall any of the discussion with respect to the improvements you mentioned were discussed?

Identifying again in this case, to the best of your recollection, who said what.

A. Again, Mr. Sterritt brought up the point, and he said that it was Huck's desire to request the Townsend Com-[fol. 204] pany to give Huck free license to any patentable improvement of the lockbolt devices licensed during the tenure of the lockbolt license agreement.

Agreeing at the same time in the proposal to license the Townsend Company on any subsequent improvement made by Huck during that same period.

Q. Do you recall any discussion with respect to exclusivity and again to the extent that you have such recollection, would you try to identify who said what?

A. The best I remember it again, Mr. Sterritt brought up the point that the lockbolt license would be exclusive for a two year period, and that was acceptable.

Mr. Dickenson indicated to the group that it was acceptable to the Townsend Company.

Q. On this matter of exclusivity, had there been any previous discussions within the Huck Manufacturing Company among Huck's officers?

A. Yes.

Q. About this subject?

A. Yes.

Q. Do you recall such previous discussions?
A. Yes, I do.

Q. When did they take place?
A. They took place at the Huck Company's offices in Detroit, in the May meeting previously referred to. During [fol. 205] that meeting, I brought up the point that if the lockbolt license were issued, it would behoove the company to have it on a non-exclusive basis.

The Court: Who was present?

A. Present at that meeting, as previously testified, to the best of my recollection, Mr. Armour, Mr. Benkert, and myself, and I now recall that Mr. Brilmyer was there.

Q. (By Mr. Lipson) Would you identify Mr. Brilmyer?
A. Mr. Brilmyer was an officer of the Huck Company. His title was vice president in charge of research, something like that. He was an engineer.

Q. Returning now to the meeting in Mr. Harness' office about which you were just testifying, was there any discussion in that meeting about an F.O.B. point, do you recall any such discussion?
A. I recall that there were discussions, but I don't remember what they were.

Q. At that meeting in Mr. Harness' office, did anyone ever leave the room—leave that office?
A. Yes.

Q. At what point in the meeting?
A. Towards the latter part of the meeting, Mr. Johnson and Mr. Sterritt left the office.

Q. Do you recall the circumstances immediately preceding their departure? Why they left?
[fol. 206] A. Prior to their leaving, Mr. Dickenson stated that he wanted the lawyers to leave the room because—or words to the effect that "we want to talk business now."

Q. Did the lawyers say anything when they left the room?
A. Not to my memory.

Q. Did they indicate where they were going?
A. Yes.

Q. As a matter of fact, did they leave the room?
A. They did leave the room.

Q. Who remained in the room when the lawyers were gone?

A. Mr. Dickenson, Mr. Armour, Mr. Johnson—no—and myself; the three of us, and any others who may have been there. That I don't remember, all who were at the meeting were there, except Mr. Johnson and Mr. Sterritt.

Q. Do you recall now whether there was any rearrangement in the seating plan that you have previously described after the lawyers left?

A. I don't recall such a rearrangement.

Q. Do you recall what the conversation was in this—at this meeting after the lawyers left the room?

Mr. Haggerty: May it please the Court, at this time I desire to interpose an objection. That the period covered in the indictment is October the 24th, 1961, and goes back five years. And any proof of a conspiracy would have to be within the five year period.

[fol. 207] Now, as to any conversations prior thereto, agreements or understandings, it could only be admissible for the purpose of showing pattern, design, intent or motive.

Therefore, at this time, I move the Court to instruct the jury that any testimony of this nature is not to be considered by them as substantive proof or having probative force of value, and not binding on the defendants in connection with the alleged commission of a crime as charged in the indictment, but is only for the purpose of motive, intent, proof and design.

Mr. Lipson: May I be heard, your Honor?

The indictment charges a continuing conspiracy, a continuation of a conspiracy. We allege in the indictment, and will prove, will fall within the five year limitation period.

The Government is entitled to show the existence of the conspiracy by facts that have taken place prior to the limitation period.

The Court: Counsel is arguing only that the jury be advised that the purpose of this testimony, and they are only to consider it for motive, intent and design.

Do you have any argument on that point?

Mr. Lipson: Yes, your Honor.

The Court: And not as to the substantive charge.

[fol. 208] Mr. Lipson: We introduce it for the substantive charge, your Honor.

The Court: To prove——

Mr. Lipson: (Interposing) To prove the continuing nature of a conspiracy, that the conspiracy was formed with the object of being continued, and in fact, was continued to the five year period that would be within the limitation period.

Mr. Haggerty: In response to——

The Court: (Interposing) That would take that to October, according to your argument, October of 1954, would it not?

Mr. Haggerty: No. The indictment is returned in '61, and there is a five year statute.

The Court: Five from '61 is '56?

Mr. Haggerty: 1956, and these events allegedly occurred in 1954.

Therefore, I say, your Honor, there can be no substantive proof in a conspiracy beyond the other—there can be no substantive proof having probative force of value.

Mr. Lipson: Your Honor,——

Mr. Haggerty: (Interposing) It must be—just a moment, please.

It must be committed within the period of the statute [fol. 209] of limitations.

It can only be shown for design, motive, intent and pattern, and that is what I am asking the Court to instruct this jury as of this time.

How can my brother in one breath breach the statute, and say that the statute of limitations does not apply, when there is clearly a five year statute connected with this alleged crime?

Mr. Lipson: Your Honor, the statute of limitations applies primarily to procedural matters, and does not affect the substantive rights of the parties.

As a procedural matter, we can show that within this five year period, there were continuing acts stemming from the inception of this conspiracy, at least as early as 1954.

I cite to your Honor's attention the case decided by this Circuit in the American Tobacco case, where, if memory serves, the Court went back many, many years, which is also a criminal anti-trust case brought under the Sherman

Act, and the Court considered for the purpose of the substantive crime, events that occurred many, many years preceding the statute.

The Court: Considered for the purpose of the substantive crime within the period of the statute, however, as alleged, but the testimony was taken to show, as counsel has said, [fol. 210] am I not correct, motive?

Mr. Lipson: I am not aware of such a limitation in the taking of the testimony of that case, your Honor.

The Court: Well, for the purposes of taking the testimony at this time—I will check it out, do you have that citation?

Mr. Lipson: I can get it for your Honor.

The Court: All right, so that we do not lose any time, I am going to go along with Mr. Haggerty on that proposition, that it may be received and the jury is advised that it is only to show motive and pattern, intent and design, and that you are to bear that in mind in the taking of this testimony, unless you hear from the Court to the contrary.

In other words, this might be taken—this testimony is being received to show a pattern, or a motive, but it is not to be taken as any evidence itself by itself, or as we call it, any substantive evidence of the crime itself, unless it occurred within the statutory period, which go into October of 1956, as I am told, is that understood?

Mr. Lipson: May I continue, your Honor?

The Court: Yes.

Mr. Lipson: Would the reporter please read back the last question and answer?

(Whereupon, the pending question was read by the [fol. 211] reporter.)

Q. (By Mr. Lipson) Will you please answer that question now, Mr. Looker?

A. I recall in substance what was said.

Q. Would you recall to the best—would you testify to the best of your recollection who said what?

A. After Mr. Johnson and Mr. Sterritt left the room, Mr. Dickenson addressed the group that was remaining and reiterated the fact that the Townsend Company had wanted an exclusive license to extend for the entire period of the patent license, rather than just a two year period.

And that on the other hand, Mr. Armour had wanted a patent license which had price-fixing provision—price maintenance provision to extend for the life of the patent, and that neither company had exactly what they wanted from that point of view.

That is, the Townsend Company did not have their exclusive license, and the Huck Company did not have their patent license which tended to—which fixed prices for the entire life of the patent agreement.

And that Mr. Dickenson did then propose that the companies enter into a supplementary verbal agreement to the effect that the Townsend Company would not violate the Huck lockbolt price structure during the life of the agreement, if the Huck Manufacturing Company refused to, or restrained themselves from issuing patent licenses to [fol. 212] potential competitors to the Towsend Company.

This is the proposal, as best as I can recall, given by Mr. Dickenson to the group in that room.

Q. Do you recall whether Mr. Armour said anything in reply to that proposal?

A. The best I recall, the next thing that was said was an objection that I raised that there should be no supplemental agreement entered into which did not take into consideration lockbolt devices which neither Huck nor Townsend Company wanted to manufacture, such as lockbolts manufactured from titanium materials which neither company was using at the present time, or lockbolts of such size and market or configuration as to not best behoove the manufacturing facilities of either company.

Now, I am sure I didn't use those same words, but that was the substance of my objection.

And there was some discussion on that point.

Q. What was the nature of that discussion?

A. An agreement was entered into.

Mr. Haggerty: Wait a minute. I object to the question. Any discussion.

Q. (By Mr. Lipson) Would you please confine yourself——

Mr. Haggerty: (Interposing) We are entitled, at the time of this, that we have first of all, that the witness

[fol. 213] as near as possible try to reconstruct the language that was used, indicate who was speaking.

If he can't, then the substance of it, indicating who was speaking.

The Court: I think Mr. Haggerty is correct.

Q. (My Mr. Lipson) That is exactly what we are trying to do.

The Court: All right.

A. I can't recall under the circumstances exactly who said what. I do recall there was some discussion after the objection I raised. I do recall the substance of that discussion was to the effect——

Mr. Haggerty: (Interposing) Just a moment. I object to it, if he can't recall. We are attempting to be charged here—we at least—if he can't recall the language and uses the substance, he must at least associate it with the person or persons who are doing the talking.

I object to it.

The Court: You related, witness, that you inserted this question of other products?

A. Yes.

The Court: As being not part of the license agreement.

And then you have indicated there was some discussion thereafter. Who is the person who began the discussion and what was said, as closely as you can recall?

[fol. 214] This is on the other products we are talking about?

A. Yes.

The Court: That you say you inserted.

A. Mr. Dickenson said, as best I can recall, that he had no objection to the inclusion of such a provision, and Mr. Armour reiterated the same conclusion.

The Court: In other words, they both agreed, is that correct?

A. That is correct.

The Court: All right.

Q. (By Mr. Lipson) Is this the first thing Mr. Armour said in this portion of the meeting, after the lawyers left the room?

A. That's the first thing I recall him saying.

Q. What happened after that discussion?

A. Mr. Armour stated, as best I can recall, words to the effect that "then we won't issue more lockbolt patent licenses if you keep our price structure for lockbolt devices."

Q. To whom was he addressing himself?

A. Mr. Dickenson.

Q. When did he say this, in which portion of the meeting?

A. This was toward the very end of it.

Q. Did anything occur in the meeting between the time of the discussion about the titanium material you mentioned, and this statement by Mr. Armour?

[fol. 215] A. I don't remember anything.

Q. Did anyone else participate in any discussion?

A. I don't recall.

Q. Did anyone take notes during the meeting?

A. I started to.

Q. Did you continue taking notes throughout that meeting?

A. Are you referring to the time after Mr. Sterritt and Mr. Johnson left the room?

Q. Yes.

A. Yes, after the lawyers left.

Q. After the lawyers left?

A. Yes, I started to take notes during that period.

Q. Did you take it throughout that period?

A. No, I took it only a very short period after they left.

Q. Why did you stop?

A. Mr. Dickenson asked me to stop.

Q. Do you recall Mr. Dickenson's words?

A. Words to the effect that "no notes, please".

Q. Did Mr. Armour say anything about that subject?

A. Yes, I was sitting next to Mr. Armour and then he turned to me and said to the effect, the same thing.

[fol. 216] Q. What did you do after receiving these instructions?

A. I then erased that which I had wrtten.

Q. Do you recall what you had written?

A. I do not.

Q. Was there any discussion at that meeting about any kind of enforcement provision or policing provision?

A. Yes.

Q. What was the nature of that discussion?

A. Mr. Dickenson and Mr. Armour had a discussion on the subject of policing the price maintenance agreement and period of exclusivity of the agreement just entered into.

Q. Do you recall who said what?

A. Only in substance.

Q. Do you recall what Mr. Dickenson said?

A. Only in substance.

Q. What did he say in substance?

A. In substance, Mr. Dickenson proposed that the policing of the price maintenance provision just agreed to would be done by himself for his company and suggested that they be done by Mr. Armour for the Huck Company, and that any negotiations and discussions relating to price structure or complaints relating to price structure violations or alleged violations be carried out in a direct relationship between Mr. Armour and Mr. Dickenson, and that members of the administrative or supervisory staff of either company were not to enter into such negotiations [fol. 217] between the companies, or to enter into such discussions between the companies relating to prices.

Q. Do you recall the substance of Mr. Armour's remarks?

A. Yes. He indicated that that was a very good idea and he indicated that to Mr. Dickenson and also to me.

Q. Do you recall his exact language?

A. I do not.

Q. Was there ever any discussion at this same part of the meeting about what would happen if one of the companies or the other did not carry out the proposals involved?

A. Yes.

Q. What was the nature of that discussion, to the best of your recollection? Who said what?

A. As previously testified to, Mr. Armour stated to Mr. Dickenson that, or words to the effect that—let's see—"We will not enter into any other lock bolt patent license excluding those products which neither company wants to manufacture, if you keep our price structure".

Q. Was there any statement made as to if the price structure were not kept?

Mr. Pomeroy: Objected to as leading.

The Court: It is, rather, but you may answer.

A. I don't recall.

Q. (By Mr. Lipson, continuing): Do you recall anything that Mr. Dickenson said on that subject?

[fol. 218] Mr. Pomeroy: He just said he didn't recall, if your Honor please. I object to this as further leading.

Mr. Lipson: I believe the earlier question was directed to what Mr. Armour had said.

The Court: We will wait a second.

A. I don't recall Mr. Dickenson saying that or anything like it.

Q. (By Mr. Lipson, continuing): Did you ever make any remarks as to your position in this new scheme of things?

A. Yes, I did.

Q. What remarks did you make?

Mr. Haggerty: I object to it unless a time is fixed.

Q. (By Mr. Lipson, continuing): Well, at what point of the meeting did you make such remark?

A. The remarks that I recall were made during that period of time when Mr. Sterritt and Mr. Johnson were not in that office, and during the period that the supplemental agreement was entered into when Mr. Armour indicated to me that any negotiations or any intercourse, so to speak, between the two companies on the matter of price were to take place, that he and Mr. Dickenson would be the parties that negotiated or talked about this matter, and I told Mr. Armour that at that time, the best I recall, that if I hear of any violations or alleged violations of the [fol. 219] price structure agreement entered into, I would tell him about it, and that was to be my role, as agreed upon with Mr. Armour and myself at that time.

The Court: With Mr. Dickenson present?

A. Mr. Dickenson was present, yes. The discussion was between Mr. Armour and myself.

Q. (By Mr. Lipson, continuing): How long did that part of the meeting last, while the attorneys were out of the room?

A. I don't recall.

Q. Well, could you estimate the time as being more or less than an hour?

A. I would estimate it at being somewhere around 45 minutes, but I don't recall the time. That is just an estimate.

Q. Do you have any recollection of anything that transpired at this meeting after the lawyers had left the room, that you have not already testified to at this time?

A. No, I don't.

Q. How did the meeting adjourn?

A. We all got up and left.

Q. Where did you go?

A. I don't recall.

Q. Do you recall ever coming in contact with the two lawyers again?

A. Hmm,——

Q. I mean immediately after the meeting.

[fol. 220] A. I believe I went down to Mr. Sterritt's office and saw him, but I am not real sure of that.

Q. Did you have any conversations with Mr. Sterritt at that time about what transpired at this portion of the meeting where he was not present?

A. I don't ever recall having discussed that with Mr. Sterritt, then or later.

Q. Did you ever have any discussions of that kind with Mr. Johnson?

A. I don't recall that, either.

Q. Mr. Looker, was there a formal written agreement ever entered into between the two companies, Huck and Townsend?

A. Yes.

Q. About when, in relationship to this meeting that you were discussing?

A. Possibly two months later.

Q. Was there any other meeting to your knowledge between the time that this agreement was entered and this meeting that you have just concluded testifying about?

A. I don't recall any such meeting.

Q. Mr. Looker, after the license agreement was—the formal license agreement was entered, do you recall having —taking a trip to the Townsend facilities?

A. This is before the license agreement was entered into?

Q. No, after the license agreement was entered. If I said [fol. 221] "before", I misspoke myself.

A. Excuse me. Yes, I do recall such a trip.

Q. Do you recall the circumstances surrounding that trip?

A. Yes.

Q. What was the purpose of that trip? Well, when did it occur?

A. It occurred some time in the spring of the following year. That is somewhere around April or May of 1955.

Q. What was the purpose of that trip?

A. The purpose was to discuss with Townsend Company matters relating to freight equalization for the shipment of lock bolts.

Q. What is freight equalization? What does it mean?

A. Freight equalization is a process which—process—it is a means by which competitors credit their customers with freight equal in amount in dollars to the difference between the freight rates on their products and the freight rates, if they had bought their products from their nearest competitor. I don't know if that is very clear or not.

Q. Do you recall the nature of the discussions you had at Townsend?

A. Yes. I discussed this matter with—I recall discussing this matter with Mr. Horst.

Mr. Haggerty: Just a moment. May it be established who was present?

Q. (By Mr. Lipson, continuing): Who went with you?

[fol. 222] A. Mr. George Q. Matthews, then the Sales Manager of the Huck Manufacturing Company.

Q. Whom did you meet with at Townsend?

A. Mr. Matthews and I met with Mr. Dickenson and Mr. Paul Horst.

Q. Would you identify Mr. Horst?

A. Mr. Horst had the title of Assistant to the President of the Company at that time.

Q. Is Mr. Horst in the Courtroom at this time?

A. He is, yes.

Q. Do you recall the nature of the discussions you had with Mr. Horst at that time?

A. I do, but before I answer that, I would like to say

there was one other person present during a portion of that time, and that was the Traffic Manager of the Townsend Company.

Q. Do you recall that man's name?

A. Briceland, or something like that.

Q. Were there any meetings that were occasioned by your visit?

A. Yes. I met with Mr. Horst and Mr. Briceland and Mr. Matthews at one point, and we discussed——

Q. (Interposing): Where did the meeting take place?

A. In the Townsend Company's office in New Brighton, Pennsylvania, and at that meeting discussions were held among the four people—among and between the four people that were there on freight equalization and the advantages [fol. 223] of freight equalization versus prepaid freight, and how the Townsend Company engaged in such practice in the distribution of their solid rivet business.

Q. At that time, Mr. Looker, to what extent was the freight charge incorporated in the price to the customer? I am speaking of lock bolts now.

A. Now, the Huck Company policy in that regard was to ship all of its products FOB its works in Detroit.

Q. What is the commercial meaning of the term "FOB"?

A. Freight On Board is the designation. It means that the customer actually takes title to the product shipped when it has been received by the common carrier and pays the transportation of those products from the producing point to its location.

Q. Do you recall who did say what in this meeting that you described at the Townsend Company?

Mr. Haggerty: May it please the Court, at this time I would like to make objection for the reasons heretofore assigned, that it is not within the period of the indictment. There is an allegation contained in the Government's indictment where they at least impute some criminality as to this freight arrangement and therefore, I ask the Jury be instructed and I desire to give your Honor an additional case, or rather a recent case of the United States Supreme Court, [fol. 224] Delli, D-e-double l-i, Paioli, P-a-i-o-l-i, versus the United States, 352 U.S. at Page 232, in support of my contention.

The Court: With respect to this proof, ladies and gentle-

men of the Jury, that is being offered here as to freight differential, I again advise you that this testimony is being received to show motive, intent, the design, and the pattern of the charge, and not to show a substantive offense, but to show its design, motive, pattern, I repeat, during the statutory years that are permitted in this case, from 1956 to 1961, unless otherwise indicated.

All right.

Mr. Lipson: Would the Reporter please read the last question?

(Thereupon the record was repeated as indicated by the Court Reporter.)

A. I recall only the substance of two of the discussions which were held.

Q. (By Mr. Lipson, continuing): Would you relate the substance of those discussions and tell us when they took place?

Mr. Haggerty: Well, I object unless it is indicated who was speaking.

The Court: And who was present.

Q. (By Mr. Lipson, continuing): And who was present?

A. Yes. The first discussion took place at the desk of the [fol. 225] Traffic Manager, this Mr. Briceland, and present were Mr. Horst, Mr. Matthews and myself, and at that time, Mr. Briceland indicated to me, primarily for my benefit, the mechanics of equalizing freight with a competitor.

He explained how rates were computed and then, added or subtracted from the customer's bill, as the case may be, and as I remember in that meeting, Mr. Briceland said about everything that was said and I didn't enter into it too much, and that I listened, because I was learning something and I don't think Mr. Matthews said much, either. I don't remember him saying much. That's about all I remember of that meeting.

Now, after that, we saw Mr. Dickenson in his office, and present there——

The Court: When you say "we," whom do you mean?

A. And present there were Mr. Horst, Mr. Matthews and myself, and possibly others whom I do not recall and at

that time, Mr. Dickenson told me that the freight equalization was the best, cleanest and cheapest way to insure that neither company enjoyed a competitive edge with respect to the ultimate cost to the consumer of the lock bolt product.

At that time I told Mr. Dickenson my position in the matter, which was a position independently arrived at, and I didn't think it was a very good idea at all and I [fol. 226] indicated that to Mr. Dickenson, in my opinion, the freight equalization was not a point which would either help or hurt either company, and that was a point of substantial burden from an administrative standpoint for our company, the Huck Company, that is, as we do not already have a Traffic Department, and we would—we would have to establish one and administer it at cost and that I remember saying to Mr. Dickenson that a few dollars don't make much difference in the sale of lock bolts; that lock bolts are sold by vigorous sales activity and the like, and we had a different opinion on that and we never did come together during that meeting, and I don't remember anything else said by anyone else, except what I have just told you Mr. Dickenson and I said.

Q. Do you recall ever paying a visit to Townsend's facilities in California?

A. Yes.

Q. Where are they located?

A. In Santa Ana, California.

Q. What is the name of that branch of the Townsend Company?

A. It was then called the Cherry Rivet Division of the Townsend Company.

Q. When did you pay this visit?

A. As close as I can recall, 1955 was the year, and I don't even remember what part of the year it was in.

[fol. 227] Q. Do you recall the purpose for your visit?

A. The purpose of my travelling to California was to administer in a more or less routine fashion the sales activities of the company on that—in that part of the country. I did specifically pay a call on the Townsend Company's Santa Ana factory for the purpose of discussing a matter with a Mr. Howard Chilcoat.

Q. Would you identify his position with Townsend?

A. Mr. Chilcoat was then the Sales Manager of the Cherry Rivet Division, as best I remember.

Q. Is Mr. Chilcoat in the Courtroom at this time?

A. He is, yes.

Q. Was there anyone else representing Huck at this meeting you had with Mr. Chilcoat?

A. Yes. Mr. Miner.

Q. Would you spell that?

A. M-i-n-e-r, whom we have identified, was with me at that time.

Q. Was there anyone else present at your discussions with Mr. Chilcoat?

A. I don't believe so.

Q. Where were those discussions and who said what?

A. Prior to calling on Mr. Chilcoat, I had received from the company's Texas representative a report that the Townsend Company's sales agent in Fort Worth, Texas, had told the Convair plant in Fort Worth that they were [fol. 228] going to stock and distribute lock bolt devices for aircraft use in Fort Worth, Texas, along with their stock of the cherry rivets, which they distributed in the area, again manufactured by the Townsend Company.

Having had that report it was my purpose to discourage the establishment of such warehouse facilities and distributor facilities in Fort Worth, as this would give the Townsend Company a competitive advantage over the Huck Company for sale of aircraft lock bolt devices in the Fort Worth-Dallas area, which has a heavy concentration of aircraft construction.

Q. Do you recall what you said to Mr. Chilcoat?

A. Only in substance. Yes, I do, in substance.

Q. And what was the substance of that?

A. I reiterated to Mr. Chilcoat——

Mr. Haggerty (Interposing): Just a moment. May it please the Court, I renew my objection for the reasons heretofore cited, and an additional one: That the proofs in this case will show that there was a contract entered into by and between Huck and Townsend in writing on September 14th, 1954; that it was a legal, valid and subsisting agreement.

There is no claim made by the Government it was other than that, and that anything that was done by this man

during that period of time within the two years exclusive-
[fol. 229] ness in the contract, was done in a legal, lawful and a valid manner, and there can be no inference or imputation of criminality.

Mr. Lipson: May I be heard, your Honor? From the information already elicited from this witness, it is clear the Government's position is that this formal contract was less than the entire agreement. In that light, we would like to present to the Court the way in which the entire agreement was actually enforced and carried into effect, in order to show there was a continuing agreement.

Mr. Haggerty: In reply to my brother, the contract states within itself, when introduced it will be shown to the Jury, that there was a two-year exclusiveness, a two-year price, which is absolutely legal under then-existing and the present-existing law, as Huck was the—had the patent right and Huck had a right for the full life of the patent, for 17 years, if it so decided, to fix the price and give an exclusive to Townsend, which in effect they did give them for two years only.

Now, this is within the two-year period and it is absolutely legal and valid and a violation of no Federal law. It could not be.

Mr. Lipson: Your Honor: I believe your Honor has already ruled on the question that patentees cannot engage in this activity, that it would be a violation of the Sherman
[fol. 230] Act, and we have gone into this matter before you in motion.

Mr. Haggerty: Oh, I object, that your Honor has ruled to any such effect, at this time, and I think it is highly prejudicial for the Government's counsel to so state in a Court before a Jury.

The Court: And the Jury is asked to disregard it.

Mr. Lipson: May I be heard your Honor?

The Court: I am wondering whether or not counsel's objection doesn't go into whether or not the agreement—there was the—I mean, the testimony discloses that counsel were present to draw an agreement. We have never heard from the witness as to whether an actual agreement was established.

As I understand the testimony, the witness said that they did enter into an agreement, an agreement was drawn some

six weeks later or some such period, and perhaps it would be in better order at this time to offer the agreement, to determine whether or not that which the witness is now testifying was in accordance with the written agreement, or beyond the scope of the agreement, or whatever it might have been.

Mr. Lipson: Your Honor, the Government readily concedes that the material the witness is testifying to now [fol. 231] would fall within the scope of the written agreement, but the Government's position is that the written agreement was, itself, only part of this larger, broader agreement and it is this larger broader agreement that the Government is contending to prove. This is a part of that agreement.

The Court: Of course counsel on the other side of the table argues that it is in accordance with the agreement, and that which was done was proper. So, I think the best way to do that is determine what is in the written agreement and let the Jury determine if it is part or not part of, as you call it, the broader agreement.

Mr. Lipson: Your Honor, we are prepared to introduce the agreement, although I haven't anticipated doing it at precisely this moment.

The Court: I thought perhaps that was what you might have in mind and perhaps it would be better because it is now a matter for the Jury's determination to determine whether it is or not within the terms of the agreement, itself, and as counsel has stated, he said it is lawful, and as you say, it is part of the greater agreement and therefore, unlawful; and therefore, it is part of their job to determine what is what, and I think perhaps it would be well that you offer the agreement at this time.

Mr. Lipson: I am prepared to do so, then, your Honor. If your Honor wants to break for lunch now, we could [fol. 232] do it afterward, or may I have five minutes to get the document?

The Court: Well, I think perhaps it would be well that you break now and then, you both can agree as to whether or not it will be admitted, or what parts are to be deleted, or whatever the score might be, so we can proceed without delay.

The best time to do it would be right now, and that way,

Mr. Haggerty will lose some of his time for lunch. So, we will break for lunch until two o'clock.

Remember, ladies and gentlemen of the Jury, don't discuss this with each other, and above all, of course, not with anyone else. So, see you back here at two-o'clock promptly.

(Thereupon the hearing in this cause was adjourned until the afternoon of the same day Wednesday, February 27, 1963, at 2:00 o'clock in the afternoon.)

[fol. 233] Detroit, Michigan, Wednesday, February 27, 1963, 2:05 o'clock P.M.

(Whereupon, the trial of the above-entitled cause was resumed pursuant to the recess.)

The Court: Ready? The parties ready?

Mr. Lipson: Government is ready.

The Court: It is noted by the Court all parties are here, including the defendants and their counsel.

Mr. Haggerty: Ready, your Honor.

The Court: You may proceed.

Mr. Lipson: Thank you, your Honor.

Robert Looker, a witness called on behalf of the Government, having been previously duly sworn, resumed the witness stand, and testified further upon his oath, as follows:

The Court: I think maybe at this time it would be well that I advise you that the Court has reviewed the law with respect to the objection that counsel has made, wherein it was contended by Mr. Haggerty, representing two of the defendants, that the testimony was admitted prior to the [fol. 234] period of the so-called statute of limitations.

It was to be admitted only for the motive, design and pattern.

The Court has done some research and I have decided to change my admonishment to you and state this way.

That you may accept that evidence and that testimony, and that it is competent to show the beginning of the alleged relationship or agreement between the parties

And it is incumbent, of course, upon the Government to show that there is a continuation of that agreement within the statutory period.

I think that would be sufficient to say at this time.

And, I quote for the defendants the authorities in Shaw against United States, 41 Fed. 2d. 26.

Imholte vs. the United States, 226 Fed. 2d. at page 589.

American Tobacco vs. the United States, 147 Federal Reporter—Fed. 2d., page 120, under paragraph 61 and 63.

And Grunewald against the United States, 353 U.S., at page 396.

All right, you may proceed.

Mr. Lipson: Thank you, your Honor.

[fol. 235] Would the reporter please mark this document 17.

(Whereupon, a document was marked Government's Exhibit No. 17, by the reporter, for identification.)

Mr. Lipson: The document is marked Government's Exhibit No. 17. I show it to the defendants for examination.

(Handing exhibit to counsel.)

Mr. Lipson: Would you mark this as 18.

(Whereupon, a document was marked Government's Exhibit No. 18, by the reporter, for identification.)

The Court: I am sorry to advise you, too, I should have said this to you before, the Chief Judge has requested a meeting at 4:00 o'clock, so I have to break away at 4:00 o'clock today. I do not think I will make the jury mad, but it might make others.

So, I am going to have to recess at 4:00 today.

Mr. Haggerty: May it please the Court, I have no objection.

Mr. Lipson: It hasn't been offered, yet, Mr. Haggerty.

Mr. Haggerty: It has not been offered?

Mr. Lipson: Not yet, Mr. Haggerty. Thank you.

The Court: I would think—you gave it to them for their examination, that normally it is usually following an offer, or a proffer, so I would assume that would be a natural response that he would have.

[fol. 236] Mr. Lipson: I am sorry if I acted out of order, your Honor.

Direct Examination. (Continued)

By Mr. Lipson:

Q. Mr. Looker, I show you Government's Exhibit No. 17. Now ignoring the first two small pages in the upper lefthand corner, and the two letters, starting with page number one, do you have it there?

A. Yes, I do.

Q. Will you turn to page eight. Can you identify any of the signatures appearing on that page, page eight?

A. Yes, I can.

Q. Which signatures can you identify?

A. I can identify the signature of A. Watson Armour, the III, and the signature of Alfred H. Benkert.

Q. Can you identify the document itself?

A. Yes, I can.

Q. What is it?

A. The document is a copy of the patent license entered into between——

Mr. Haggerty: (Interposing) Just a minute. I object to it until and unless it is offered in evidence.

Q. (By Mr. Lipson) What is the title of the document, Mr. [fol. 237] Looker?

A. Agreement.

Q. Does it purport to bear any dates?

A. It does.

Q. What date does it purport to bear?

A. It purports to bear two dates.

Q. What are they?

A. September 3, 1954, typed on the top of the first page, and the 14th day of September, 1954, partially written by hand on the first paragraph of the first page.

Offers in Evidence

Mr. Lipson: Your Honor, at this time, prior to offering No. 17 into evidence, I would like to offer as Government's Exhibit No. 18, the stipulation entered into between counsel for the defendants and the Government, with respect to the testimony of Mr. H. E. Young, in this case.

(Handing exhibit to counsel.)

Mr. Lipson: I offer the stipulation, your Honor.

Mr. Haggerty: No objection. I suppose when it is signed and filed it becomes part of the record and files of the Court and it is not necessary to introduce it into evidence.

The Court: It is made—he identified it separately, so we will accept it for what it is.

Mr. Lipson: Your Honor, at this time, the Government offers into evidence Government's Exhibit No. 17, as the [fol. 238] lockbolt license agreement, with this qualification, your Honor:

Attached to it are four pieces of paper that are not offered as part of 17, they are only attached to it because that is the way the document was received—those four top pieces of paper are not offered in connection with 17; 17 refers only to the eight page legal sized paper document.

The Court: All right. Why not just have the reporter just turn those four sheets over and then we can—turn them over on to the back, and then we will have the reporter here staple them or put some tape on it so that they are not part of it.

Mr. Haggerty: Why not take them off, your Honor?

The Court: You can take them right off, if you want to.

Mr. Lipson: With your permission, your Honor, we will do so. We were reluctant because they are not our papers.

The Court: All right.

Mr. Lipson: We have no objection to taking them off.

Q. (By Mr. Lipson) Mr. Looker, I show you Government's 17——

The Court: (Interposing) You now offer 17?

Mr. Lipson: Yes, your Honor.

[fol. 239] Mr. Haggerty: May it please the Court, if your Honor will examine the documents you will see that there is some red underlining and red marginal notes. In the absence of an explanation, we object to the receipt of the document into evidence without any explanation as to why they are there or who put them there.

Mr. Lipson: Your Honor, if I was called upon to give an explanation, I frankly will say that I cannot. The document is in the same condition under which it was received by legal process from the defendants in this case. If an interlineation was made there, I cannot explain it.

Mr. Haggerty: I am satisfied with counsel's explanation made in good faith, that that is the way he received it.

The Court: All right. Then it may be received.

Mr. Pomeroy: May I ask Mr. Lipson——

Mr. Lipson: (Interposing) Yes, sir.

Mr. Pomeroy: (Continuing) —from which defendant this particular copy of the license agreement was received, if he knows?

Mr. Lipson: Yes, I can tell from the markings in the lower righthand corner. It is a numeral preceded by a letter "J", which would indicate it came from the Huck Manufacturing Company.

[fols. 240-245] Mr. Pomeroy: Thank you.

We have no objection to the exhibit, your Honor.

The Court: It may be received.

* * * * * * *

[fol. 246] Q. Thank you. At this time, Mr. Looker, I would like to go back to a subject we were discussing this morning about a visit you paid to the Santa Ana facilities of the Townsend Company.

Do you recall the subject matter we were pursuing?

A. Yes.

Q. I believe at that time I was trying to elicit from you—or I asked you the conversations you had with a Mr. Chilcoat. Do you recall having had any such conversations with Mr. Chilcoat at that time?

A. Yes, I do.

Q. Would you relate those conversations to the jury, specifying who said what, and give us an indication of the time that those conversations occurred.

Mr. Haggerty: May it please the Court, I object to the question for the reason that the document just received in evidence, the Government's Exhibit 17, shows it is within the purview and contained under that document:

Number one. That Huck granted to Townsend a period of two years an exclusive license.

Number two. That Townsend agreed to hold the price line for two years under that document.

[fol. 247] That it was absolutely a valid and legal agreement.

Under the General Electric case and other cases in accordance with this, that follow it.

Therefore, there can be no criminality alleged or inferred or by innuendo injected in this case that any agreement, any conversation they had in 1955, while this agreement was in effect, starting September 14, 1954, and running two years, could not be received in evidence.

Further, that it is irrelevant and it is immaterial.

Mr. Lipson: I will pass the issues of relevancy and materiality.

Upon Mr. Haggerty's theory, it would be impossible for the Government to ever prove a conspiracy case of this nature because obviously during the two years' period there would be no grounds for such a prosecution, and after the two-year period, the Government, by Mr. Haggerty's theory, would be precluded from introducing any evidence what happened in the two-year period, but more basically, your Honor, this is only part of the general conspiracy rule that acts, legal in themselves, when taken together to form a conspiracy become part, or can certainly become part of an illegal relationship.

Again I cite to your Honor's attention the case decided [fol. 248] by this Circuit, approved by the United States Supreme Court, one of the leading criminal anti-trust cases, the American Tobacco case, where the Court made just such statements in its decision.

Mr. Haggerty: I say, may it please the Court, there is no holding that where there is a valid, legal subsisting contract and in accordance and under the terms of that contract, Mr. Looker in his then position was consulting with someone from—representing Townsend, in reference to some compliance with that valid and subsisting contract that it is not admissible into evidence.

It doesn't tend to prove anything. That it is incompetent and it is immaterial.

And it was a perfectly legal valid act as he had a right to do, and as he had a right to investigate at that time.

The Court: I think your statement is correct. However, I think the testimony is admissible.

You may proceed.

Mr. Lipson: Thank you, your Honor.

A. Would you repeat the question, please?

Mr. Lipson: Would the reporter please read back the question?

(Whereupon, the pending question was repeated by the reporter.)

[fol. 249] A. The meeting that Mr. Chilcoat—referred to in previous testimony—took place during sometime in 1955. The conversations which I will relate took place in Mr. Chilcoat's office between Mr. Chilcoat and myself, with Mr. Miner present.

I called Mr. Chilcoat's attention to the matter reported to me by Mr. Unfried in Fort Worth, Texas, regarding the establishment of a distributorship for lockbolts by the Standard Parts Company of Fort Worth, Texas; a Cherry and Townsend sales agent and distributor.

Having called those matters to Mr. Chilcoat's attention, Mr. Chilcoat told me it was not the Townsend Company's intention to establish that company as a distributor and that the Townsend Company's intentions were to live up to the lockbolt patent license agreement to its very letter.

I further told Mr. Chilcoat, after having heard that, to the effect that if the Standard Parts Company were appointed as a distributor in Fort Worth, the Huck action would be to establish its own warehouse in that same area, wherein neither company would benefit by more sales, there being an offset to the—any advantage one to the other, and that it would merely cost us more money in doing business.

Q. Do you recall having any conversations with Mr. [fol. 250] Chilcoat at that same time about the subject of freight equalization?

A. I don't recall such conversation.

Q. Mr. Looker, do you recall having had any telephone conversations with a Mr. Paul Horst at any time with respect to the matter of freight equalization?

Just answer yes or no, if you have any recollection.

A. Yes, I do remember one such incident.

Q. Can you give us the approximate time?

A. I remember it as a telephone conversation I had with Mr. Horst prior to visiting he and Mr. Dickenson at the Townsend Company, more or less setting up the visit and

discussing the matter over the telephone as well, to a very limited extent.

Q. What was the approximate date of the conversation?

A. Early 1955.

Q. Do you recall anything of that conversation?

A. I do not, no.

Q. Did Mr. Horst—do you have any recollection of Mr. Horst paying any visit to Huck Manufacturing Company in connection with freight equalization?

A. Yes, I do.

Q. Would you tell us about what time this occurred?

A. Either late 1955 or early 1956. I can't pin it any closer than that.

Q. Do you recall whether Mr. Horst was accompanied [fol. 251] by anyone when he came to you—came to Huck?

A. I believe he was accompanied by a Mr. George Bentley.

Q. Do you recall the purpose of his visit?

A. I can't testify as to the purpose of it.

Q. Do you recall any conversations you may have had with Mr. Horst at that time?

A. I can recall some conversation, yes.

Q. Would you relate to the jury the nature of those conversations, and who said what?

Mr. Haggerty: May it please the Court, I object to it for reasons heretofore assigned in this type of conversation. Objections made on the record.

The Court: All right, you have your objection.

Proceed.

Q. (By Mr. Lipson) Would you please answer the question, Mr. Looker?

A. Yes. I can state only in substance what was discussed in more or less general terms. The meeting, as I remember, was held in my office, and Mr. Horst and Mr. Bentley were there.

The Court: Will you identify Mr. Bentley?

A. Mr. Bentley was at the time, I believe, the general sales manager of the Townsend Company.

The Court: All right.

A. Mr. Horst reiterated the Townsend position, that [fol. 252] they wanted freight equalized for shipments

of lockbolts and I reiterated—at least, what was my own private opinion at the time, I am not certain, and I wasn't certain it was the company's opinion, that we didn't want to equalize freight on the shipments of lockbolts.

And I stated to Mr. Horst why I thought it was a bad idea to equalize freight, and he stated to me why he thought it was a good idea, and that's about as far as we got.

Q. How long did the visit last?

A. I don't know.

Q. Did you have any discussions with Mr. Armour, the president of your company, about this matter of freight equalization about that time?

A. Yes, I did.

Q. Can you recall the approximate time you had these conversations with Mr. Armour?

A. No, I cannot.

Q. Do you recall what part of what year it may have been?

A. Discussions on the matter of freight equalization and like topics relating to who pays the freight, were discussed between myself and Mr. Armour from time to time for the entire period of my employment, during which there was in existence a lockbolt patent license between Huck and Townsend. I don't recall any specific conversation. I [fol. 253] recall it was a matter of general discussion often.

Mr. Armour told me on many occasions that Mr. Dickenson wanted freight equalization and I would give my argument that I thought it was a waste of time and money to consider it. This was the position that I took during my entire employment, during that period of time, and that's about the best I can answer your question.

Q. Thank you.

Mr. Looker, do you recall paying any other visits to the Townsend Company facilities in Pennsylvania but for the one you have already told us about?

A. I only remember the two visits previously testified to.

Q. Two visits. Would you—I am not sure if I recall the second visit. Would you give us the date of the second visit?

A. The first visit, previously testified to, was with Mr. Huck, in 1951, approximately.

And the second visit was the visit testified to that Mr.

Matthews and I called on Mr. Horst and Mr. Dickenson and the traffic manager.

Q. Thank you.

Mr. Looker, to what extend was it a part of your duties as vice president in charge of sales at Huck to be familiar with the prices sold—prices lockbolts sold for in the field?

[fol. 254] A. Very great extent. It was my duty to be familiar with it.

Q. What did you do to keep yourself familiar with it?

A. I had to tell the customers how much they were.

Q. I mean, what did you do to keep up with the situation? How would you know what lockbolts sold for?

A. I had a current list of all lockbolt prices, both standard and special, which were printed and published at the time, including typewritten or ditto form limited publications price lists, and I kept that up to date and current at all times.

Q. To what extend were lockbolts sold, or discounted from, or reduced from, different from this published price list that you just mentioned?

A. To my memory, no extent.

Q. Did you have any instructions outstanding to your sales people with respect to reporting prices?

A. Yes.

Q. What were those instructions?

A. The sales staff was instructed to advise the customers of the standard published prices for lockbolts, including its company's standard term of sales and to insure that no other agreements were entered into, which deviated from the published price schedule.

Q. Did you have any instructions outstanding to your sales people with respect to Townsend prices?

[fol. 255] Perhaps I might rephrase the question, with your Honor's permission.

In what way, if any, did you have knowledge of Townsend's prices in the field?

A. If the Townsend Company offered for sale any lockbolt device, at any price or at any term varying from those established by Huck, I was promptly advised by the salesmen concerned.

Q. Which salesmen, the Townsend salesmen or the Huck salesmen?

A. The Huck salesmen who were competing for the same business.

Q. How would he learn of the difference?

A. In his normal course of duties, he established relationships with the buyers of these parts, and again in the normal course of duties, he would be told if Townsend Company offered terms, prices and so forth at a more favorable rate than Huck.

Q. Did you ever, in fact, receive such reports from your sales personnel?

A. Yes.

Q. Did those reports indicate any kind of a relationship between the prices of Huck and Townsend?

A. Occasionally, yes.

Q. What kind of relationship did those reports indicate?

A. I am not certain what type of report you are referring to. Are you talking about the normal day to day reports [fol. 256] that our salesmen turned in?

Q. I am referring to the general reports your salesmen send you during the normal course of their activities, as part of their duties?

A. Well, if and when they heard of a condition where the Townsend Company offered its lockbolt products to the market at a more favorable price or term or condition, I was so advised by a sales report, which the salesmen turned in during the normal course of their duties.

Q. Do you have any recollection of such reports?

A. I recall one such report, yes.

Q. During how long a period of time?

A. During the approximate two year period of my employment, during which the license was in effect, there may have been others, I recall one specific occasion.

The Court: When was it? If you recall.

A. No closer than the two year period that we are speaking of, your Honor.

The Court: What two year period are you speaking of?

A. The two year period, approximately two year period of my employment, in which the Huck Company had an effective and existent license with the Townsend Company.

The Court: That would be beginning 19——

A. (Interposing) September, 1954, through August—or [fol. 257] to August, 1956.

Q. (By Mr. Lipson) You can't pin it down any more?

A. I can't pin it down any closer than that, no.

Q. Except for that one instance that you do recall, were you aware of any relationship between the price that Huck charged for lockbolts and the price that Townsend charged for lockbolts?

A. I was aware of the relationship which established that equality of prices, terms and conditions.

Q. Did you say "equality", or did I miss hear you?

A. The equality.

Q. Oh, I am sorry. Mr. Looker, with respect to the Huck Manufacturing Company only, how many separate prices are there for lockbolt devices?

Mr. Haggerty: During what period of time, your Honor?

Q. (By Mr. Lipson) This is limited to the period of time when Mr. Looker was vice president and in charge of sales for Huck.

A. I recall seven such separate price lists covering different types of lockbolt devices.

Q. What was the relationship between these seven, did they come out the same time, or different times, or what did they signify?

A. Well, there were three basic price lists for lockbolt [fol. 258] sales, for shipments from Detroit, and also three basic price lists for lockbolt sales for shipment from our West Coast warehouse, and another price list covering non-standard lockbolt devices, making seven.

I am not certain if I answered your question.

Q. Were there any price differences in these different price lists; price changes?

A. There were changes from time to time, yes, in the normal course of business.

Q. Do you know whether the changes were in any normal direction, were they up or down, or were they mixed?

A. During my period of employment, for lockbolts, I don't ever remember there ever being any price decreases.

Q. Do you remember anything to the opposite?

A. I remember that each price change was an increase.

Q. With respect to any single price list is there just one

price in the price list or there a series of prices, or how are these little bolt-like items actually priced?

A. Now taking one of the three major groups of price lists as an example, the aircraft lockbolt, they are in that price list, they are divided fundamentally into the four major lockbolt diameters offered for sale, and within the four major diameters, the price list is broken down into the two materials offered for sale.

In this case, steel and aluminum.

[fol. 259] And in each of those groups, are broken down to the different head styles and lengths offered for sale, and each of those groups are broken down into quantities between roughly a hundred or two hundred and fifty to a hundred thousand pieces, so each price list was a very detailed document showing in effect the actual price for any quantity of any part number offered for sale.

Q. Mr. Looker, earlier in your testimony you referred to standard and special lockbolts.

Would you explain to the jury the difference between standard and special lockbolts?

A. The standard lockbolts were those devices having the most usual industrial application.

And the special lockbolts were considered those which had only occasional or extremely specialized application.

Now, a new lockbolt product was first considered to be a special and sold as such, until such time as its sale warranted its being placed among the standard ranks.

Q. To what extent were the price lists for standard incorporated—strike that.

To what extent did the price list for standard lockbolts incorporate specials, and vice versa?

A. The prices for special lockbolts were not shown on this standard price list.

[fol. 260] Q. How did the customer learn of these prices?

A. The customers were provided with a printed copy of the applicable price list for his industry or his type of lockbolt, for the standard group.

For the special group, we priced those by quotation.

Q. Mr. Looker, are you familiar with the phrase "lockbolt stump"?

A. I am, yes.

Q. Would you explain to the jury what a lockbolt stump is, as opposed to a lockbolt?

A. Yes. A lockbolt stump is a product that is very much like a lockbolt, except that it has no extending pin tail. It is a bolt-like structure having threads with the same collar.

Now, the collar is squeezed around that bolt-like structure by a sort of conical shape or cone tool which is hammered down over the collar, squeezing the collar material into the little grooves in the pin.

It is different. Very much like a rivet, except that it deforms the malleable collar into the grooves of the stump itself.

Q. Who makes lockbolt stumps?

A. Lockbolt stumps are manufactured by the Huck Manufacturing Company, to my knowledge.

Q. Any other company?

[fol. 261] A. Not to my direct knowledge.

Q. Was there ever any meeting between the Huck Manufacturing Company and Townsend Company, to your knowledge, at which lockbolt stumps were discussed?

A. Yes.

Q. When did this meeting occur?

A. Subsequent to the signing of the lockbolt patent license between the two companies and prior to my leaving the company.

Q. Where did the meeting take place?

A. I am not certain.

Q. Do you recall who was present at the meeting?

A. I do not.

Q. Do you recall the subject matter?

A. I do not. I recall the knowledge that the Huck Company had licensed the Townsend Company for the manufacture and sale of stumps, and I recall seeing our research engineer's office a very large stack of drawings for lockbolt stumps which he told me were for transmittal to the Townsend Company for the stump license, and for the Townsend Company's manufacture of lockbolt stumps.

The details of the negotiation are something that do not stick in my memory in any way.

Q. What is a lockbolt stump used for?

A. It is used in the same type of application where a

[fol. 262] lockbolt is used and where there is not clearance to drive the collar on the pin with the driving tools.

In restricted clearance application.

Q. Who uses it?

A. I don't know who now uses it. I can say that most of the major airplane manufacturers used it during my period of employment with Huck.

Mr. Lipson: Would the reporter mark this document Government's Exhibit No. 19.

(Whereupon, the document was marked Government's Exhibit No. 19, by the reporter, for identification.)

Q. (By Mr. Lipson) Mr. Looker, I show you a document marked Government's Exhibit No. 19. Would you turn to page seven of that exhibit.

Can you identify any of the signatures appearing on page seven of that exhibit?

A. Yes.

Q. Which signatures?

A. I can identify the signature of A. W. Armour, the III.

Q. Mr. Looker, I ask you to turn the document over and look on the reverse side of the blue backing paper. Have you ever seen that particular paper before?

A. Yes, I have.

Q. Under what circumstances?

A. May I correct my answer?

[fol. 263] Q. Yes.

A. I am not certain that I have seen this particular piece of paper before. I have seen similar pieces of paper before, yes.

Q. That was the import of my question.

A. Yes. During my many years' dealings with the firm of Harness, Dickey, and Pierce, I saw their blue backs many times and this is a contract blue back from Harness, Dickey and Pierce.

Q. Does that document purport to bear a date?

A. Dated on the first page, November 1, 1955.

(Whereupon, a document was marked Government's Exhibit No. 20, by the reporter, for identification.)

Mr. Lipson: The reporter has marked as Government's Exhibit No. 21 a document entitled "Stipulation of Testimony by Dante C. Fabiani."

Mr. Haggerty: I have no objection. Do you have any objection, Mr. Pomeroy?

Mr. Pomeroy: I haven't seen it. This is the stipulation we signed yesterday, I believe, but it is marked Exhibit 20, not 21.

Mr. Lipson: I thought I said 20. If I didn't, I misspoke.

Mr. Pomeroy: No.

Mr. Lipson: Mr. Looker, may I have the exhibit you [fol. 264] are examining?

I show 19 to defense counsel for examination and possible objection.

The Court: We will take a ten minute recess.

(At 3:00 o'clock P.M., a recess was taken.)

[fols. 265-269] The Court: You may be seated. You may proceed.

OFFER IN EVIDENCE

Mr. Lipson: Thank you, your Honor. I take it there are no objections to Government Exhibit No. 19? This will be offered less the patched piece of paper which I am now removing, and I understand that there are some marginal notations on this document as well. The marginal notations are not part of the Government's offer.

The Government now offers No. 19.

The Court: Any objection?

Mr. Dickey: No.

Mr. Haggerty: No objection.

Mr. Pomeroy: No objection, your Honor.

The Court: It may be received.

[fol. 270] Q. Thank you. Mr. Looker, does the same sales force at Huck sell stumps as well as lockbolts? When I say stumps, I mean lockbolt stumps?

A. Does it or did it?

Q. At the same time you were Vice President in Charge of Sales?

A. Yes.

Q. Mr. Looker, are you familiar with the firm known as the Pheoll Manufacturing Company?

A. Yes.

Q. When you were Vice President in Charge of Sales for the Huck Manufacturing Company, were you aware of any activity of the Pheoll Manufacturing Company in the lockbolt field?

A. Yes.

Q. How did you receive this information?

A. The information was received from our West Coast sales representatives.

Q. Approximately what date?

A. During 1955, to the best of my memory.

Q. What was the general import of that information you received?

A. It was reported to me that the Pheoll Company had developed and offered for sale a lockbolt device.

Q. And what did you do upon receipt of that information?

A. I advised our company's management of that effect. [fol. 271] Q. Well, who in particular? Whom did you speak with?

A. I don't remember doing it. I remember that the company's management was aware of it after I was, but I don't remember advising them.

Q. Were there any meetings of company personnel to discuss the Pheoll lockbolt?

A. Yes.

Q. Did you attend such meetings?

A. Yes.

Q. About when did they take place, in time?

A. Shortly after we were advised of the threatened entrance of the Pheoll Company into lockbolt manufacturing sale.

Q. Where did these meetings take place?

A. There was one meeting took place in—at the Huck Company in Detroit and in the office of Mr. Benkert.

The Court: How do you spell that Pheoll, for the record.

A. P-h-e-o-double l.

Q. (By Mr. Lipson, continuing): And where did the other meeting take place?

A. There was another meeting that took place in Chicago, I believe at the Chicago Athletic Club.

Q. With respect to the first meeting, do you recall who was present?

A. I recall seeing at that meeting Mr. Armour, Mr. Ben-
[fol. 272] kert, Mr. Brilmyer and possibly others. I have a vague recollection of seeing a group of people there, but those are the ones I specifically remember.

Q. Do you recall the subject matter of that meeting?

Mr. Haggerty: Well, just a moment, your Honor. I think that we should have it fixed with greater certainty the date of that meeting.

The Court: Yes.

Mr. Haggerty: It is all indefinite and nebulous.

Q. (By Mr. Lipson, continuing): Can you give us your best recollection of the time when this meeting in Mr. Benkert's office took place?

A. During the early part of 1955.

The Court: "Early"? Spring, summer, fall?

A. I would just be giving supposition if I said any one of those. I don't know.

Q. (By Mr. Lipson, continuing): Do you have any actual recollection of the meeting, or do you just think this meeting occurred?

A. I recall the meeting specifically.

Q. What was the general subject matter of the meeting?

A. General subject matter was what to do about the Pheoll problem.

Q. Do you recall any of the conversations?

A. Yes, I do.

[fol. 273] Q. Would you relate them to the Jury, saying who said what?

A. In substance, Mr. Brilmyer made the point during that meeting that the Huck Company should license the Pheoll Company for the manufacture and sale of lockbolts.

Q. Did you say anything at that meeting?

A. Yes. I took a contrary position, that we should not.

Q. Did Mr. Armour say anything at that meeting?

A. I don't recall anything specifically he said.

Q. Did Mr. Benkert say anything at that meeting?

A. I don't recall.

Q. Was there any statement made by anyone present at

that meeting about the reasons for or against licensing the Pheoll Manufacturing Company?

A. Yes.

Q. Who said it?

A. I made the point with what I considered to be at the time valid reasons against licensing the Pheoll Company; Mr. Brilmyer made the point, again with argument and again with reasons, for licensing the Pheoll Company. The thing I remember about that meeting was the confrontation that Mr. Brilmyer and I had, taking opposite viewpoints on the subject.

Q. Was there any discussion at that meeting in Mr. Benkert's office about the effect on the Townsend Company?

A. Yes, there was.

[fol. 274] Q. What was that discussion?

A. It was a point that I raised that if we licensed the Pheoll Company, the Townsend Company would be free to charge whatever they saw fit during the—or at the expiration of the two-year licensing period.

Q. Did anybody make any comments on your statements?

A. I don't remember any comment specifically, no.

Q. With respect to this meeting at the Chicago Athletic Club, do you have an approximate time when that occurred?

A. I——

The Court: Was it after this?

A. It was after the meeting in Detroit previously testified to.

The Court: Still within the same year?

A. It may have been within the year or it may have been the beginning of the following year. My memory on time and date of that—of either one of those meetings is just non-existent.

Q. (By Mr. Lipson, continuing): Do you recall who was present at that meeting?

A. I recall that Mr. Armour was there, and that Mr. Benkert was there and that I was there, and that Mr. Sterritt was there, and that a Mr. Mason Phelps, P-h-e-l-p-s, President of the Pheoll Company at the time was there, and an attorney by the name of Charley Lockwood.

Q. Whom did he represent?

[fol. 275] A. The Pheoll Company.

Q. Was this a meeting in connection with some other event that was going on, or was the meeting the only reason for your being there?

A. The meeting was conducted for the purpose of discussing with Pheoll their request for a lockbolt license.

Q. Was there in fact any discussion at that meeting?

A. Yes, there was.

Q. Do you remember any of the discussion?

A. I do.

Q. Would you relate to the Jury what happened, what was said and who said it?

A. Again, I can testify only in substance. The meeting started by Mr. Lockwood, or it could have been Mr. Phelps, I am not sure, but by one of the Pheoll people, requesting a lockbolt license.

Q. Did Mr. Armour say anything to that?

A. I am not certain.

Q. Did anyone representing Huck at that meeting have anything to say after the request?

A. Yes.

Q. Who?

A. Mr. Sterritt said that, or words to the effect that the lockbolt structure—this was not confined just to stumps, now, this was lockbolts, pull-type lockbolts—the lockbolts [fol. 276] —lockbolt structure infringed Huck patent claims to which Mr. Lockwood replied that they did not.

And then, Mr. Sterritt said that there were going to be more patents issued which would—had—were ready to issue, more United States Letters Patent, and that they would definitely infringe, I believe, that patent, and Mr. Lockwood said that he knew nothing about that.

Q. Under those circumstances, did any of the Pheoll people explain why they wanted a license from the Huck Manufacturing Company?

A. Yes. Either Mr. Lockwood or Mr. Phelps, and I am not sure which it was, expressed the—expressed the position that—to the effect that "We don't think there are any patents involved in this thing. We are making or propose to make a product which is outside of the scope of any valid Huck lockbolt patent, but to avoid trouble, to avoid suit, to avoid conflict, we'll take a lockbolt license at this time."

Q. Was there any decision reached on the part of the Huck people at that meeting, whether or not to grant a license to Pheoll?

A. Prior to that, and as discussed in the previous meeting testified to, the position that Huck would take was made, which was that Huck would not license Pheoll at this time, unless they persisted and proceeded in the face of the threat of infringement and proceeded in face of the possibility of the new patent issuing or probability of the new [fol. 277] patent issuing.

Does that answer your question?

Q. Was there any decision made at the meeting in Chicago? Or was it left hanging?

A. I remember no decision.

The Court: Was there ever one?

Mr. Lipson: Your Honor,——

The Court: Go ahead.

Mr. Lipson (Continuing):—I don't want to——

The Court: Go ahead. I am interfering with your idea.

Q. (By Mr. Lipson, continuing): Mr. Looker, what was the position you took with the Brown-Line Corporation when you left the Huck Manufacturing Company? What job did you get?

A. I was President.

Q. What kind of business was Brown-Line engaged in at that time?

A. Brown-Line was, or had been engaged in the manufacture and sale of principally aircraft cargo tie-down devices.

Q. Well, what are these devices? Can you be more specific?

A. They include fittings used to attach aircraft seats to the floor of an airplane; straps used to tie down aircraft cargo, buckles, hooks and various hardware of that nature.

Q. At that time, was it your intention to continue in the same line of business that Brown had been in?

[fol. 278] A. At the time I took over its Presidency?

Q. Yes.

A. No.

Q. What was your intention at that time?

A. My intention was to direct the company's efforts to the manufacture and distribution of special fastening devices.

Q. What kind of—strike that.

While you were President of Brown-Line Corporation, did you procure or have procured any kind of machinery for Brown-Line Corporation?

A. Yes.

Q. What kind of machinery?

A. This is in what period of time?

Q. Well, from the time you came with Brown-Line to this date?

Just the general nature of the machinery is what I want.

A. General Machinery used for the—included milling machines, lathes, screw machines, punch presses, grinders, all types of common factory equipment we have procured.

Q. To what extent is any of this machinery useful in the manufacture of lockbolts or lockbolt parts?

A. The screw machines of our possession are useful in the manufacture of lockbolt collars.

Q. Were they ever used in the manufacture of lockbolt collars?

A. Briefly, yes.

Q. When did this manufacture of lockbolt collars occur by [fol. 279] Brown-Line Corporation?

A. Around September or October of 1958.

Q. Who ordered them?

A. The Boeing Airplane Company of Seattle, Washington.

Q. Did you actually sell these to Boeing?

A. We had a purchase order for the sale of them. The sale was never consummated.

Q. Did you ever receive any kind of payment from Boeing in connection with this?

A. Yes.

Q. May I ask you, Mr. Looker, did Brown-Line Corporation ever ask the Huck Manufacturing Company or anyone associated with the Huck Manufacturing Company for a license in connection with the lockbolt devices?

A. Yes.

Q. When?

A. It asked the Huck Company for a lockbolt license in July or possibly August of 1956, at the first occasion, and subsequently on one or two other occasions.

Q. Has Brown-Line Corporation ever been licensed by the Huck Manufacturing Company?

A. No.

Q. Mr. Looker, are you familiar with a manufacturing firm known as the Olympic Screw & Rivet Company of Downey, California?

A. Yes, I am.

[fol. 280] Q. Do you know what kind of business Olympic is engaged in?

A. Yes.

Q. Will you tell us generally the type of business they are engaged in?

A. They are engaged in the manufacture and distribution of solid rivets and blind rivets.

Q. Do you know the names of the management of that company, the individuals?

A. Some of them, yes.

Q. Do you know the name of the Vice President in Charge of Sales?

A. Yes. I believe that is his title. I know—I know a gentleman who performs that function, and I am not certain if that is his present title.

Q. Who is it?

A. It is a Mr. Edward Stau, S-t-a-u.

Q. Do you know the President of that Corporation?

A. Yes, I do.

Q. What is his name?

A. Samuel Maness, M-a-n-e-double s, I believe.

Q. While you were connected with the Huck Manufacturing Company, did either of these gentlemen ever contact you with respect to a lockbolt license for Olympic?

A. Yes.

Q. On how many occasions?

[fol. 281] A. I know—I remember one specific occasion.

Q. When did this occur and who contacted you?

A. A Mr. — Mr. — Mr. Maness, the company's President.

Q. About what time was this?

A. I don't recall. Mr. Maness on two occasions made this request. One was by letter and the other one was to me verbally.

The Court: Was this during the time of your employment?

A. During the time of my employment.

The Court: With Huck?

A. Yes.

The Court: All right.

Q. (By Mr. Lipson, continuing): Do you recall whether this occurred before or after the Townsend license agreement between Huck—the Townsend lockbolt license agreement between Huck and Townsend?

A. The two events I just referred to both occurred after the lockbolt license agreement between Huck and Townsend.

Q. Where did your conversation with Mr. Maness occur?

A. In Mr. Maness' office in the Downey plant.

Q. In California?

A. Yes.

Q. On any of these occasions, did you ever give an answer to Mr. Maness concerning his request for a license? [fol. 282] A. I don't—I don't recall anything positive about it, no.

Q. Mr. Looker, while you were with Huck Manufacturing Company, did Olympic Screw & Rivet ever get a license to manufacture lockbolts?

A. No.

Q. Are you familiar with a firm known as the Republic Steel Corporation?

A. Yes.

Q. What is the general nature of their business?

A. They are a large steel producer.

Q. They are a very well-known company? Is this the same Republic?

A. I knew them as the Republic Steel Company, yes. They produce steel.

Q. Were you ever contacted by anyone connected with Republic Steel Company, while you were employed by Huck, in connection with a lockbolt license?

A. Yes.

Q. Do you recall about what time this occurred?

A. It occurred after the Huck-Townsend license and before I left the company. I don't remember when.

Q. Do you remember the place of this contact or the manner of the contact?

A. I remember a meeting that was held, a luncheon or a breakfast meeting, and I'm not sure which, which was

[fol. 283] held in this city at the Detroit Athletic Club, with the members of the Huck management and myself and with members of the Republic Steel management.

Q. Do you remember any of the names of the individuals from Republic Steel that you characterize as management?

A. I remember a Mr. Foy, F-o-y.

Q. With what company was he connected?

A. Republic Steel Company.

Q. Do you know what his title is or was at that time?

A. I am not certain.

Q. As to any of the other persons connected with Republic, do you recall who they were?

A. No.

Q. Who were the other persons connected with Huck, besides yourself, who were present?

A. Mr. Armour was there, I believe.

Q. Well, do you recall whether or not there were any other persons?

A. Yes. To the best of my memory, Mr. Armour was there, and I think Mr. Benkert was there, too, but I am not certain of that.

Q. Do you recall the subject matter of the conversation at this gathering?

A. Yes.

Q. Did that concern lockbolts in any respect?

[fol. 284] A. Yes.

Q. Would you tell the members of the Jury what happened, identifying to the best of your recollection who said what?

A. The subject matter was a discussion on the request the Huck Company had for the issuance of a lockbolt patent license to Republic Steel Company. The Huck Company had contacted the Republic Steel Company prior to this meeting for the purpose of determining if they were interested in manufacturing large-diameter lockbolts, that is, lockbolts of such diameter that Huck couldn't make them, themselves, half-inch, three-quarter inch, and other sizes for which Huck at that time had no facilities.

The Republic Steel Company became familiar with the lockbolt fastening device, having received requests for quotation, and these men indicated to me that they had travelled to Detroit to discuss with us not just making

lockbolts on subcontract, for Huck's sale, but making lockbolts under patent license for their own sale.

Q. Was Republic Steel Company ever granted a license to manufacture lockbolts, to your knowledge?

A. Not to my knowledge, no. May I qualify that answer?

Q. Please do.

A. They may have been granted a patent—a license to manufacture lockbolts for Huck on subcontract, but to my knowledge, they were never granted a patent license, which [fols. 285-288] included the sale of that product to others, other than Huck.

* * * * * * *

[fol. 289] Direct Examination. (Continued)

By Mr. Lipson:

Q. Mr. Looker, as a result of your employment with the Huck Manufacturing Company, have you become familiar with the nature of Huck's mailing procedures, its internal [fol. 290] office procedures for mailing letters?

A. Yes.

Q. How did a letter go out from the Huck Manufacturing Company?

A. By United States mail.

Q. Well, what was the internal procedure within the company, supposing someone were to draft a letter?

A. Generally, the person writing the letter dictated it to a stenographer, and the letter was then transcribed by the stenographer, with the stipulated number of copies. The letter and copies were then given to the person having dictated the letter. If all was in order, the person having dictated the letter, signed the letter and gave it back to his secretary or stenographer, and at that time the secretary or stenographer would mail the original and distribute the number of copies, and send the stipulated file copy to that department's files.

Q. Was there any particular color of the file copy?

A. For the letters, the file copy was generally yellow.

Q. What were the colors of the other copies that you referred to?

A. White.

Q. As a general practice in the Huck Manufacturing Company, was there any indication on the file copy as to who wrote the letter?

A. Yes.

[fol. 291] Q. What kind of indication would normally appear on the copies?

A. The person having dictated the letter, the initials were shown in the lower lefthand side, followed by a colon or a slash mark, and then the letters or initials of the secretary or stenographer who transcribed that letter, or memorandum.

Q. Was there any way of identifiying which of the white copies went to which department or person in the Huck Company?

A. Yes.

Q. What means of identification were used?

A. The list of people who were to receive copies were shown the copy sheets, in the case of letters, and on the—and on all copies in case of memoranda, the persons for whom the copy was intended was either encircled or checked by the stenographer at the time that she distributed the copies of that document.

Q. Did anyone, any executive officers of the Huck Manufacturing Company have any kind of a stamp that would indicate receipt of any of their copies?

A. Yes.

Q. Which officers?

A. Mr. Armour had one, for his office in Chicago. Mr. Westrick had one. Mr. Westrick is identified as an employee of the Huck Manufacturing Company, who, at the time I left the employment of the Huck Manufacturing Company, was in charge of the order department of that [fol. 292] company. He had a stamp indicating receipt of mail.

The sales department, itself, had a stamp showing the receipt of mail.

The Court: Will you distinguish one from the other?

Q. (By Mr. Lipson) Yes. Will you describe Mr. Armour's stamp, to the best of your recollection?

A. Yes. Mr. Armour's stamp had an A.W.A., and beneath it was the date of the receipt of the document.

Q. Will you describe—I am sorry.

Would you describe the color of Mr. Armour's stamp, to the best of your recollection?

A. As far as I remember, they are mostly red.

Q. Will you describe the nature of the sales department stamp that you referred to?

A. Yes. The sales department stamp had the words "Sales Department" D-e-p-t, and beneath that was the date again. Rubber stamp date.

Q. Do you recall whether Mr. Benkert had any kind of identifying stamp?

A. I don't recall.

Q. Have you ever had occasion to—while you were with Huck—to see Mr. Armour's handwriting?

A. Yes.

Q. How often?

[fol. 293] A. Probably four or five times a week.

Q. Well, during what periods of time from 1947 through 1956, or during a more limited period?

A. No, primarily during the period 1953 or so on through 1956.

Q. Do you recall, generally, the circumstances under which you would be able to see his handwritten signature?

A. Yes.

Q. What were the circumstances?

A. One of the primary means of communication in the Sales Department at that time was a report which our sales engineers wrote for each important sales call they made, while calling on customers in the field. Those copies —correction, those reports came into the Sales Department, Mr. Armour always received a copy of that report—of each report. Often he wrote notes on them and sent them to me, asking what had been done, or suggesting that things be done for followup purposes, or for action to be taken as a result of the call stipulated on the sales report itself.

This was the most usual means of my having seen Mr. Armour's handwriting.

Q. During the course of time you were employed at Huck, did you ever have occasion to see Mr. Benkert's signature?

A. Yes.

Q. How often?

A. Very frequently.

[fol. 294] Q. Well, how often would that be, approximately?

A. At least twice a month.

Q. On what occasions?

A. He signed my paychecks.

Q. Mr. Looker, at this time I would like to show you Government Exhibits 21, 22, and 23, which have been previously marked by the reporter. Referring to the signatures on each of those three documents can you recognize those signatures?

A. On Government Exhibit No. 21, I recognize the signature of Alfred E. Benkert.

Q. While we are on 21, Mr. Looker, there is a page attached—the second page of 21, do you recognize any of the signatures or writings that appear on that page?

A. You are referring to the second large size page, not the small one?

Q. Yes, I am.

Mr. Lipson: Your Honor, at this time I would like to clarify something.

There is, on the copy that Mr. Looker has, a handwritten note saying "files", which would indicate that this was at one time filed with a Government agency.

I am reluctant to tear it off, because of certain regulations of the agency involved, but that is not considered a part of the document.

Q. (By Mr. Lipson) The second large size page, yes.

[fol. 295] A. I recognize the signature of Alfred E. Benkert, and his initials on the second large page, of Exhibit 21.

Q. On Exhibit 22, do you recognize any of the signatures appearing there?

A. On the first large parge I recognize the signature of Mr. Alfred E. Benkert, as well as on the second page of the same exhibit. And as well as on the third page of the same exhibit.

Q. I am sorry. Did you say the third page of Government Exhibit No. 22?

A. Yes.

Q. May I see your copy of Government Exhibit No. 22?
A. (Handing exhibit to counsel.)

Mr. Lipson: Let the record show that the second page Mr. Looker referred to is merely a carbon copy of the first.

Q. (By Mr. Lipson) With respect to Government Exhibit No. 23, do you recognize any of the signatures?
A. On the first large page, I recognize the signature of Mr. Alfred E. Benkert, as well as on the second large page of the same exhibit.

OFFERS IN EVIDENCE AND OBJECTIONS THERETO

Mr. Lipson: I would like to offer these in at this time. Do you have any objection?
Mr. Haggerty: I would like to see them.
Mr. Lipson: Of course.

[fol. 296] (Whereupon, the exhibits were handed to counsel.)

Mr. Haggerty: May it please the Court, with reference to these pre-proffered exhibits, I object to them as being irrelevant and immaterial to the proceedings now before the Court.
Mr. Lipson: Your Honor, they have no relevance at this time, but I would like to offer them at this time so that they would stand to authenticate other documents, should the need arise.
The Court. All right, we will pass them for the moment, then.
Mr. Lipson: Yes, your Honor.

Q. (By Mr. Lipson) Mr. Looker, I show you a Government exhibit marked 24. Would you examine that exhibit, please?
A. Yes.
Q. Mr. Looker, can you tell me who prepared Government Exhibit No. 24?
A. Yes. I did.
Q. Is there a signature on Government Exhibit No. 24?
A. Yes, there is on page two.
Q. Do you recognize that signature?
A. I do, yes.

Q. Whose signature is it?
A. My own.
Q. Is Government Exhibit No. 24 on any special kind [fol. 297] of letterhead that you recognize?
A. Yes.
Q. What kind of letterhead?
A. It is on a Huck Manufacturing Company's Sales Engineers' Report Form.

Mr. Haggerty: I object to testifying to the content of an exhibit until and unless it has been received in evidence.
Mr. Lipson: Your Honor, we are not offering any testimony at this time about the content of the exhibit, merely trying to——
The Court: (Interposing) I think he is still in the course of identification, are you not?
Mr. Lipson: Yes, your Honor.

Q. (By Mr. Lipson) Does it purport to bear any kind of a stamp?
A. Yes, there are several.
Q. Do you recognize any of the stamps?
A. Yes.
Q. Which stamps?
A. I recognize the stamp——

Mr. Haggerty: (Interposing). Well, now, I object to testifying from the content; we are getting into the content and the subject matter. It is highly improper.
The Court: All right. All right.

[fol. 298] Q. (By Mr. Lipson) Do you recognize any initials that appear on this document?
A. Yes.

Mr. Haggerty: Well, I likewise—may it please the Court, I think it is thoroughly competent if received in evidence to read or to show to the jury, or both, but to testify from it, without its receipt in evidence, as long as it has been identified and it has been identified——
The Court: (Interposing) Are you satisfied that it has been identified?
I think counsel is merely trying to do that.
Mr. Haggerty: He says it was a letter written by the witness Looker, himself.

The Court: All right.

Mr. Haggerty: Which is sufficient identification.

The Court: All right.

Then you may proceed on any other line of interrogation necessary to the offer of proof.

Q. (By Mr. Lipson) Mr. Looker, do you recall writing Government Exhibit No. 24?

A. I don't recall dictating it, no.

Q. I offer—I am sorry, did you have any further comment?

A. I did not, no.

Mr. Lipson: I offer 24 in evidence.

Mr. Haggerty: May we see it?

[fol. 299] Mr. Lipson: Yes.

(Whereupon, the exhibit was handed to counsel.)

Mr. Haggerty: May it please the Court, in reference to the Government's Exhibit No. 24, so marked for identification, we object to it.

It is incompetent, irrelevant and is beyond the period set forth in the Government's indictment which commenced in 1954. This is a matter involving September 4 through 7, 1951, and the contents of it is totally foreign to the subject matter involved in this litigation.

Mr. Lipson: Your Honor, I believe the indictment——

Mr. Haggerty: (Interposing) Would your Honor like to read it?

The Court: I have—they furnished me with copies of it this morning.

Mr. Haggerty: Do you have a copy of it, your Honor? Here it is, Mr. Lipson.

Mr. Lipson: I believe the indictment uses the phrase, at least as early as 1954.

In any event, I think the document is relevant to show the competitive relationship of the two corporations prior to the 1954 formation of what the indictment alleges to be the illegal agreement, and for that purpose alone, it would be relevant.

Mr. Haggerty: What materiality would the competitive [fol. 300] position of the two corporations be, prior to the offenses alleged in the indictment?

Mr. Lipson: The fact that they——

Mr. Haggerty: (Interposing) What materiality or relevancy would that be?

The Court: I think it has materiality and I shall admit it.

Mr. Pomeroy: If the Court please, I should like to object to it also on the further ground that the document is hearsay, if it is offered for the truth of the statements contained in it, and no hearsay statements by this witness in the form of this memorandum should be admitted and binding upon the Defendant Townsend and Dickenson.

The Court: I missed the last part.

Mr. Pomeroy: And that no hearsay statements by this witness, on behalf of the Huck Manufacturing Company, in 1951, should be accepted as binding on the Defendants Townsend and Dickenson.

The Court: You have a point there. Do you have any remark about that?

Mr. Lipson: Yes, your Honor.

Let me first deal with whether or not the subject matter contained is admissible as hearsay. Obviously, it is hearsay; however, it is a part of the two noted exceptions to the hearsay rule, one of which is the admission rule.

[fol. 301] Obviously, Mr. Looker, when he wrote this, was acting in his normal scope of authority.

The Court: You are offering this under the Shop Book Rule, so to speak?

Mr. Lipson: Well, the Shop Book Rule would be the second exception to the hearsay rule, and we offer it under either one of those exceptions to the rule, yes, your Honor.

The Court: Now, the next point he raises is with respect whether or not it may be offered against the Defendants Townsend and——

Mr. Haggerty: (Interposing) Dickenson.

The Court: (Continuing)—Dickenson.

Mr. Lipson: Your Honor, we have already prepared a memorandum of law submitted to your Honor on precisely that subject. I believe counsel for defense has also received copies of that memorandum.

We refer your Honor to that memorandum of law, and with your Honor's permission, I would like to quote from it at this time.

The Court: All right.

Mr. Pomeroy: If the Court please, I don't know whether —I don't know how extensive an argument we are going to get into here.

The Court: I do not know. Just give me the basic——

[fol. 302] Mr. Pomeroy: (Interposing) Or whether we ought to excuse the jury or not.

The Court: You mean as a declaration of a co-conspirator?

Mr. Lipson: Yes, your Honor. The memorandum is entitled "Memorandum of Law and Admissibility of Declarations of Co-Conspirator."

Essentially, the quoted portion of Judge Leahy's opinion appears in that memorandum involving the United States v. Vehicular Parking, and obviously, with greater authority, the language of the United States Supreme Court quoted on page two in that memorandum in the case of the United States v. Gypsum Company, 333 U.S. 364, which was an anti-trust conspiracy case and the rule set down by the Supreme Court in that case quite clearly was that once there has been prima facie evidence of the existence of a conspiracy, the declarations and acts of the various members, even though made or done prior to the adherence of some to the conspiracy, become admissible against all as declarations or acts of co-conspirators in aid of the conspiracy.

The remainder of the memorandum deals with statements made by agents of a corporate co-conspirator which is obviously the only way in which a corporation can act, as through its authorized agents.

Mr. Haggerty: May I—pardon me.

[fol. 303] Mr. Pomeroy: Your Honor, may I reply to that, your Honor?

The Court: Yes.

Mr. Pomeroy: One formulation of this rule that Mr. Looker—Mr. Lipson is relying upon, is that any act or declaration by one co-conspirator committed in furtherance of the conspiracy and during its pendency, is admissible against each co-conspirator, provided that a foundation of its admission is laid by independent proof of the conspiracy.

The Court: In other words, he has quoted a case that says once a prima facie case, that is the pre-requisite.

Mr. Pomeroy: That is the United States Gypsum opinion,

your Honor, as is clearly indicated, and I would respectfully submit that that foundation has not been laid.

Nothing that this witness testified to yesterday, or the day previous, accomplishes that fact. The alleged supplemental agreement, as he called it, was merely an oral extension of a written agreement, if you take it on the terms in which he testified.

And, therefore, there is no foundation for this kind of evidence at this stage of this trial.

Mr. Lipson: Your Honor, with respect to the necessity for statements being in furtherance of the conspiracy, we quote the portion of Judge Leahy's opinion in the Ve-
[fol. 304] hicular Parking case, which appears on page two of the Government's memorandum.

Mr. Haggerty: I call your Honor's attention that that is a District Court case as against the decision of the United States Supreme Court.

Mr. Lipson: I quote:

> "—the admissions of every co-conspirator, whether a party to the cause or not, and regardless of the time of his entrance into the combination, are admissible. His declaration need not be in furtherance of the conspiracy. It suffices if the declarant's statement relates merely to the purposes of the alleged combination."

We have not, your Honor, quoted from the United States v. Imperial Chemicals decision, 100 Fed. Suppl, 507, also an anti-trust case, but it bears out the propositions advanced by Judge Leahy.

Similarly, United States v. E. I. du Pont de Nemours, 107 Fed. Suppl. 324. Which was also an anti-trust conspiracy.

We think the quoted rule from the United States v. U.S. Gypsum Company as set down in the Government's memorandum is definite and establishes the rule under which the admissions of the co-conspirator come in.
[fol. 305] This was clearly a rule making decision by the Supreme Court.

The Court: Well, I shall admit it on the basis that it is material to show the background of the dispute as set forth in your first reason, and the facts that lead up to the initiation of the conspiracy.

And for that reason, as far as this exhibit is concerned, I think it is material to the determining what has happened, and it is of value in determining background, and for the purposes of this ruling that applies to all defendants.

Mr. Lipson: Thank you, your Honor.

Q. (By Mr. Lipson) Mr. Looker, I hand you Government Exhibit No. 24 once more.

Would you read from the portion of that document, the heading, that, is the material preceding paragraph numbered one on that page.

All the material including the printed material, as well as the written and typed material.

A. Yes.

(Reading)

"To: Sales Department
From: R. Looker
Date: September 4, 5, 6, 7, 1951"

The heading above that is "Huck Manufacturing Company Sales Engineer's Report."

[fol. 306] "Company: Consolidated Vultee Aircraft Corporation.

"Street & City, Fort Worth, State Texas.

"Products B36 Aircraft"

and "X by the word personal."

"Distribution——"

Q. You can—with your permission, your Honor, you can skip that remaining portion of the heading which there has been no information.

The Court: How about "distribution"?

Mr. Lipson: Oh, I am sorry. Distribution would be relevant.

A. (Reading)

"Distribution: L. C. Huck",

a checkmark in a box under a column marked information.

"A. W. Armour III,"

a checkmark in a box under the heading information.

"W. J. Westrick,"

a checkmark in the box under the heading information, and initials following.

Q. (By Mr. Lipson) Do you recognize those initials?

A. I do, yes.

Q. Whose are they?

A. These are the initials of Frank A. Dobbe.

Q. Who is Mr. Dobbe?

A. Mr. Dobbe was, at that time, vice president in charge [fol 307] of sales of Huck Manufacturing Company.

Q. Would you continue, please?

A. Yes. (Reading)

"Under the heading Personnel contacted: See Below.

"Details of Sales or Tool Report:

"Marion L. Hicks, Assistant General Manager.
"Jake H. Deitzer, Chief of Materials.
"Henry Jones, Purchasing Agent.
"Charlie Dawson, Patent Attorney.
"Lester Munroe, Executive Assistant.
"Roy Lind, (spelling) L-i-n-d, the letters
"S. A. P. D.
"Ed Kurzava, Group 5—Buying Supervisor.
"Al Higgins, Division Manager.
"J. E. MacBride, Rivet Tooling.
"Jack Fain, General Foreman #46.
"Ed Faulkner, General Foreman #45."

Q. Before you continue, may I ask you if you know with what companies those persons are associated?

A. Each of the people listed above were employees of the Consolidated Vultee Aircraft Corporation.

Q. Would you read paragraph number one of Government Exhibit No. 24?

A. Yes. (Reading)

"Paragraph Number One:

[fol. 308] "On the morning of September 4, 1951, the writer together with Messrs. Huck, and Unfried met with Messrs. Hicks, Deitzer, Jones, and Dawson. Mr. Hicks, representing management at that meeting, stated that it was not the policy of Convair to infringe or encourage the infringement of patents. He stated that Convair regretted the unfortunate incident that

Cherry Lockbolts had been purchased, and that the problems to be solved were namely to keep production going, and also decide what to do with the Cherry Lockbolts."

Q. May I ask you at this time what the—whether you know what Cherry Lockbolts mean?

A. Yes.

Q. What are Cherry Lockbolts?

A. Cherry Lockbolts refer to a lockbolt manufactured by the Cherry Division of the Townsend Company.

* * * * * * *

[fol. 309] Mr. Lipson: Your Honor, at this time the Government would like to show counsel Government Exhibit [fol. 310] marked 25 for examination, and possible objection.

Mr. Dickey: Have you offered this in evidence?

Mr. Lipson: Preparing to offer it in evidence, Mr. Dickey, yes, sir.

Mr. Dickey: Well, I have some objections when you do it.

The Court: All right, let me hear them.

Mr. Lipson: I believe the Judge asked——

The Court: (Interposing) Let me hear them.

Mr. Dickey: Yes.

I object to the admission in evidence of Exhibit 25, which is a notice of appeal in a suit named in the exhibit, unless the judgment in the case to which this exhibit refers, is also produced in evidence.

It has no meaning without the judgment.

Mr. Lipson: Your Honor.

The Court: Yes.

Mr. Lipson: There has already been testimony about what the judgment was. The fact that Huck and Townsend had a lawsuit and Huck won.

If there is any serious doubt as to the appeal from that lawsuit, we can admit the opinion of the Court, but, frankly, we see no purpose doing it.

That's why we are not doing it.

The Court: I was wondering why the appeal—there has [fol. 311] been no dispute with respect to an appeal where

Mr. Lipson: (Interposing) We would like to establish firmly, as far as dates are concerned, your Honor, the fact of appeal and the dates appealed.

The Court: It may be received for the dates only, otherwise it is excess.

Mr. Lipson: Thank you.

Your Honor, with your permission, could I summarize the date of appeal, without asking the witness further questions?

The Court: Yes.

Mr. Lipson: Notice of Appeal——

The Court: (Interposing) This is respect to the——

Mr. Lipson: (Interposing) The Huck-Townsend Patent Suit.

The Court: All right. That has heretofore been testified by this witness?

Mr. Lipson: Yes.

The Court: Go ahead.

Mr. Lipson: Dated the 27th day of May, 1953. Filed by the Clerk, May 27, 1953.

Q. (By Mr. Lipson) Mr. Looker, I show you Government's Exhibit marked No. 26, would you examine No. 26, please?

The Court: I take it, defense counsel has had an opportunity to examine this over the recess from last night, all [fol. 312] those proposed exhibits, am I correct?

Mr. Lipson: Yes, your Honor. The exhibits were—with minor exceptions, the exhibits have been in defense counsel's possession in some cases months and in some cases several months.

Yesterday, after the termination of the court proceedings, we identified the exhibits we expected to enter today more definitely than we had previously.

The Court: All right. Now they have each been marked as you propose to offer them?

Mr. Lipson: Your Honor, some of them we won't offer. I might say that.

Not every exhibit that is marked, because some are duplicates.

The Court: I was wondering whether or not we could save time with the objections and determine which and

what kind of objections we are going to have to them, whether or not they should be admitted as a group or in their entirety, and are they based on the same reasons defense counsel, that you have heretofore given to exhibit 24, for example?

That being—it was admitted on the basis of a business record properly kept in the course of business.

Mr. Haggerty: Well, we don't think we could be confined to that, your Honor.

[fol. 313] The Court: No, I say I admitted it on that basis.

Mr. Haggerty: Yes, you admitted it on that basis.

The Court: Now, are your objections—what I am trying to avoid is each exhibit being offered separately with the same delay in time.

Now if the same objections, and I do not want any of your rights eliminated in the objection to the exhibits, but I was trying to save time so we do not—are not here offering exhibits all day long.

Mr. Pomeroy: Well, if the Court please, we would have the same objections to all of these exhibits prior to the period covered by the indictment, insofar as they are Huck documents as distinguished from Townsend documents.

The Court: Townsend documents.

Mr. Pomeroy: And all these appear to be of that variety, and because we think that being hearsay they do not come within any accepted definition—accepted exception to the hearsay rule. Particularly the so-called co-conspirator declaration rule.

There may be some other specific exceptions—objections to other specific exhibits, but those are the main points that we would take concerning this group, your Honor.

The Court: You, too, Mr. Haggerty?

[fol. 314] Mr. Haggerty: Well, your Honor, it is difficult——

The Court: (Interposing) I mean, are you going to repeat the same objection? I would like to see each one as they are offered.

Mr. Haggerty: Well, I don't want to be bound at this time to state whether I would or would not, your Honor, because I would say that that objection, yes, but there may be additional objections.

The Court: All right. Go ahead.

Q. (By Mr. Lipson) Have you examined Government Exhibit 26, Mr. Looker?

A. Yes, I have.

Q. Is there a signature on that exhibit?

A. There is an initial.

Q. Whose initial is it?

A. It is my own.

Q. Do you recognize the letterhead?

A. I do.

Q. What kind of a letterhead is it?

A. The usual Huck Manufacturing Company interdepartmental correspondence form.

Q. Are there any initials indicating who drafted the document?

A. Yes, there are.

Q. Who would have drafted that document?

A. The initials indicate that I drafted the document.

[fol. 315] Q. Does the document purport to bear a date?

A. It does.

Q. What date?

A. February 3, 1953.

Mr. Lipson: Your Honor, at this time I offer Government Exhibit No. 26.

Mr. Pomeroy: Is this offered, if I may ask, as proof of the fact that Mr. Looker wrote this memorandum or dictated it on February 3, 1953, or is it offered as proof of the contents of the memorandum?

Mr. Lipson: It is offered for the latter purpose, your Honor.

Mr. Pomeroy: We would object to it more specifically for that reason—as offered for that latter purpose, on the ground, your Honor, that no basis has been laid, as I said before, no connotation made, therefore it appears to be sort of a boot strap operation, if I may say so.

The Court: Well, this has already been testified to in substance.

Am I right?

Mr. Lipson: That is one of the reasons it is being admitted for, your Honor—offered for, I am sorry, your Honor.

Mr. Looker was—from what he has testified previously—intimately involved in the agreements and arrangements [fols. 316-318] among the two companies, and I think it encumbent upon the Govenment in a case of this nature to establish corroborative evidence of Mr. Looker's oral testimony.

This is being offered to prove the truth of the matters inserted therein, and in order to corroborate the testimony already given by Mr. Looker earlier in these proceedings, it is a relevant, contemporaneous document.

It is also being offered, incidentally, for the purpose of showing knowledge by one of the individual defendants in this case. I think that will come out when the document is admitted.

The Court: All right, any additional objections?

Mr. Haggerty: Yes, your Honor, we object to it, as it is prior to the first date set forth in the information.

The Court: All right. You both have——

Mr. Haggerty: (Interposing) Which is very liberal in its terms beyond the statute as it stands.

The Court: It may be admitted.

* * * * * * *

[fol. 319] Q. Does there appear on this Government Exhibit No. 26 any rubber stamp impressions?

A. Yes.

Q. What are they?

A. The first one in the upper lefthand corner are the initials E. B. S. and the date February 4, 1953.

Q. Do you know who E. B. S. is?

A. I do not.

Q. Are there any others?

A. Yes, in the upper right hand corner is the rubber stamp bearing the initials A. W. A. and the Roman numeral III, with the date February 4, 1953. And below that a [fol. 320] red rubber stamp with the initials A. W. A. and the date below, February 4, 1953.

Q. Is this the kind of stamp you have previously testified to? Strike that.

Do you recognize that stamp?

A. The stamp bearing the initials A. W. A.?

Q. Yes.

A. Yes, I do.
Q. Whose is it?
A. Mr. Armour's.
Q. Thank you, Mr. Looker.

Mr. Looker, I show you a document marked Government Exhibit No. 27, will you please examine 27?

A. Yes. May I ask a question?

The Court: Go ahead.

Q. (By Mr. Lipson) Yes.
A. Would you ask me to examine these, do you want to read them thoroughly to become familiar with them or merely—it will take about a half an hour.
Q. I would like you to read them to become familiar with them, because I would like to ask you a question or two about it afterwards.

The Court: Let's see if we cannot do without it first, because he might know the answer and you can refer to what you want in the memorandum, provided it is admitted.
[fol. 321] Mr. Lipson: Thank you, your Honor.

Q. (by Mr. Lipson) Mr. Looker, does Government Exhibit No. 27 purport to bear any signature?
A. It does, yes.
Q. On the third——

Mr. Haggerty: (Interposing) Your Honor, we might show him this by this formality of proof if he will—he has served us copies of it—if he will simply offer it for examination after the witness has examined it, I think we can shorten this considerably.
The Court: Fine.
Mr. Lipson: That's what I think the Judge asked previously.
The Court: No, I had reference to the objections. Go ahead.
Mr. Lipson: I show 27 to counsel for the defense.
Mr. Haggerty: Now, may it please the Court, in reference to the tendered exhibit, as far as the letter that is written by Mr. Looker, or as is called factors relating to the establishment of a second source, and so forth, the only objection

that I have as to that is that it is beyond the statute of limitations.

But, attached to it are, which did not appear on what we have received, we have it, but they are separate exhibits.

[fol. 322] One is a letter of April 11, '51. There is a letter in very rough draft of a patent—patent license agreement, and then there is a second letter of February 21, 1951, and attached is Huck's patent relating to Lockbolts, which I do not think is part of this exhibit, and if offered, should be offered separately.

Has your Honor an accurate copy of the exhibit?

Mr. Lipson: May I take another look at the document, Mr. Haggerty?

It is a little difficult to follow.

Mr. Haggerty: Yes, you have a lot of documents attached thereto.

The Court: After the memo, there is, in my copy, a letter from counsel dated April 11th.

Mr. Haggerty: What year?

The Court: 1951.

Mr. Lipson: Mr. Haggerty, I——

Mr. Haggerty: (Interposing) And this is dated May 4, 1954.

Mr. Lipson: The list of patents I can't find on the documents that you refer to.

Mr. Haggerty: Here. Huck patents relating to lockbolts. There is a description of it here.

Mr. Dickey: You have four different documents.

Mr. Haggerty: You have four different documents.

[fol. 323] Mr. Lipson: That is part of the letter, it isn't a separate list. I thought you were referring to a separate list.

Mr. Haggerty: No. No.

The Court: And then a letter dated April 11, 1951; a letter dated February 21, 1951, both from the same counsel, and the attachments that were to that letter.

Mr. Lipson: Your Honor, can I say something on this matter?

The Court: Yes.

Mr. Lipson: On the second page of the three page memorandum which Mr. Haggerty has no objection, on the—

well, the second full paragraph at the bottom, there is a reference to other letters.

The Court: What are you reading from?

Mr. Lipson: The paragraph beginning with "factors relating to".

The Court: All right.

Mr. Lipson: And those other letters were obviously appended to and part of this document written by Mr. Looker that Mr. Haggerty probably has no objection to.

Therefore, in order to submit a complete document, the others are attached. In addition to the nature, the physical nature of presentaiton, I might say this is precisely the matter in which the Government obtained these documents, [fol. 324] they were attached at that time.

The Court: Well, that does not make these admissible, certainly.

Mr. Lipson: No, I just wanted to explain the fact of physical attachment.

The Court: What are you particularily interested——

Mr. Lipson: (Interposing) In the secondary documents, your Honor?

The Court: Yes, if any.

Mr. Lipson: Yes, your Honor.

Particular interest is on page one of the April 11, 1951, letter, particularly with respect to the marginal notation—the handwritten marginal notation appearing on the right-hand corner. The lower righthand corner of the document.

In connection, I might say, your Honor, with the various stamps and other indications of the passing of this document that appear on the upper righthand corner.

The Court: All right.

Mr. Lipson: I might say at this time, other than that, and the fact that they tend to—they are reference documents, I have no other point in having them in.

The Court: All right.

Now may I hear your objection, if any?

Mr. Haggerty: Well, may it please the Court, in refer- [fol. 325] ence to the letter of April 11, 1951, it is dated 11, '51, which is prior to the date set forth in the indictment; beyond the statute of limitations.

It is incompetent and irrelevant to the issues here, because this is back in '51, was a letter addressed to the Ex-

ecutive Vice President of the company by its patent counsel, to the effect of a proposed outline of the license, what one should be, but it was never effectuated and it is absolutely superfluous and does not show any intent.

Mr. Lipson: Your Honor—are you finished, Mr. Haggerty?

Mr. Haggerty: Yes.

Mr. Lipson: Your Honor, I think it would be admitted for the purposes already decided by the Court.

The Court: It has some probative value towards——

Mr. Lipson: (Interposing) In addition to that——

The Court: (Interposing) Let me finish. I am ruling with you, so do not continue.

Mr. Lipson: Thank you, your Honor.

The Court: I am satisfied it has some probative value towards the background material in this matter, and for the same ruling as heretofore made it may be admitted.

Mr. Pomeroy: If the Court please, I would just like to add my objection, of record, in addition to those previously [fol. 326] made, to object especially to any binding effect of any marginal notations on Defendants Townsend and Dickenson.

The Court: Except—well, we will see what it has to say. Again, it is only evidence of Huck, it is not any evidence here, nor it there any reference or any admissions in here that should be—well, they speak for themselves, I do not want to determine what the jury—I better keep still.

Mr. Haggerty: Was your Honor's ruling that the letter of April 11th is in evidence.

How about the rest of the subject matters attached to it?

The Court: I see no materiality to all that.

Mr. Lipson: There is no purpose in bringing that to the jury's attention, with the exception possibly of the signature.

The Court: Except for what?

Mr. Lipson: The signature. The indication of the signature on the April 11, 1951, letter, that is all.

The Court: I do not quite follow you.

Mr. Lipson: To establish who wrote the letter.

The Court: Oh, I see.

Mr. Lipson: That is all.

[fols. 327-333] The Court: All right. I do not think it is objected to on the basis of not being genuine.

Mr. Lipson: No, you asked what I wanted to bring out.

The Court: Why you wanted to—all right, then.

Q. (By Mr. Lipson) Mr. Looker, would you—Mr. Looker?

A. Yes.

Q. Would you read this document from the beginning word "factors" to the bottom of page three?

A. (Reading)

> "Factors relating to the establishment of a second source for Huckbolt Manufacture by License agreement.
>
> "The following is a pro and con discussion relating to any Huckbolt license agreement which we now contemplate or may contemplate in the future and is noted herewith in response to Mr. A. W. Armour's request of May 3."

Q. May I interrupt you for a moment. Would you tell us what a Huckbolt is?

A. A Huckbolt is—or was—Huck's terminology for the word "Lockbolt".

Q. Would you continue to read the document, please?

A. Yes.

. . . . . .

[fol. 334] Q. (By Mr. Lipson) There is more to that page, Mr. Looker, would you continue reading?

A. A date stamp, February 4, 1954——

The Court: (Interposing) May 4.

A. May 4, 1954, and a handwritten note, "Sales Policies the same—F.O.B. point etc."

Q. (By Mr. Lipson) Do you recognize the handwriting of that handwritten note?

A. I do.

Q. Whose it is?

A. That is my own.

Q. Is there any distribution list of this document?

A. There is.

Q. In whose hand is the distribution list written?

A. It is in my own.

Q. Would you read the names of the persons?

A. Yes. On page one of the exhibit, upper righthand corner are words "Armour, Benkert, Dobbe, Reynolds, Stern and Looker."

[fol. 335] Q. I believe we have identified all except Mr. Reynolds and Mr. Stern, will you tell us who they are?

A. Yes. Mr. Reynolds was at the time a director of the company, and its Certified Public Accountant, and Mr. Stern at the time was a director, and I believe Secretary of the corporation, and the company's general counsel.

Q. Are either of those gentlemen in the court room?

A. They are both in this court room, yes.

Q. Mr. Looker, would you now turn to the first page of the April 11, 1951, letter which is part of Government Exhibit No. 27.

Do you recognize the letter head of that?

A. I do.

Q. Whose letterhead is it?

A. It is the letterhead of Harness, Dickey and Pierce.

Q. And is that the same firm you previously identified?

A. Yes, it is.

Q. Are there any stamps on the upper marginal section of that first page of that letter?

A. Yes, there are.

Q. Would you say—tell us what those stamps are?

A. Yes. In the upper lefthand corner is the date stamp with the initials M. V. C., April 12, 1951.

Q. Can you identify that stamp?

A. I cannot.

[fol. 336] Q. Are there any other stamps on the righthand section?

A. Yes, in the upper righthand corner is a date stamp with the initials A.W.A. and the Roman numeral III, and the date April 12, 1951, with a second date stamp below and to the left, with the initials A.W.A., and the date below April 15, 1951.

Q. Are there any other handwritten notations of similar import?

A. I don't know what you mean. Oh, yes, there is in the upper righthand corner of page one of this document, the letters A.E.B., followed by the numbers 3-2-54.

Q. Do you recognize the handwriting?

A. I do not.

Q. Is there anything done with that notation?

A. It has been encircled.

Q. Do you recognize the handwriting of any of the written notations appearing on the upper righthand section of that page?

A. The handwriting you refer to appears to have been scratched out and I don't recognize it.

Q. Directing your attention to the lower righthand section of the page, do you recognize that handwriting?

A. I do, yes.

Q. Would you read from the April 11, 1951, letter, the paragraph, the lower half of the page beginning with the [fol. 337] three words "the two most" and ending the very last word on the page, the typewritten portion?

A. Yes.

(Reading):

> "The two most important provisions in any patent license agreement are: A. the granting clause and B. the royalty clause. I have prepared an outline of various factors and proposals that should be considered by the Huck management under these two clauses and the unified position currently determined prior to the Townsend meeting.
>
> "A. Granting clause——
>
> "1. A straight, unrestricted, non-exclusive license to Townsend to manufacture, use and sell lockbolt constructions under the Huck patents.
>
> "2. The same as 1 plus a provision that Huck's improvements will be included.
>
> "3. The same as 1 plus an agreement that Huck will not grant licenses to others."

Q. At this point, Mr. Looker, can you identify the author of the handwritten notation opposite the last items that you just read?

A. I can, yes.

[fol. 338] Q. Whose handwriting is it?

A. It is the handwriting of Mr. A. Watson Armour.

Q. Will you read that notation?

A. Yes.

(Reading):

"Not in writing—agreed for period of three years in writing."

And there is a question mark to the left and above the word "agreed".

Q. Turning to the last page of that letter, will you just tell me who signed it?

A. Mr. John C. Sterritt.

Q. Have you previously identified who Mr. Sterritt is? Well, would you please identify him, who Mr. Sterritt is?

A. Mr. Sterritt was the patent counsel of Huck Manufacturing Company and the member of the firm of Harness, Dickey, and Pierce.

Q. Thank you, Mr. Looker.

Mr. Pomeroy: May I see a copy of that, please?

Mr. Lipson: The copy, or the original?

Mr. Pomeroy: The original of that.

Mr. Lipson: Sure.

Mr. Pomeroy: I am not sure our copy is the same in all respects. Excuse me, your Honor.

The Court: That is all right.

[fol. 339] Mr. Lipson: May I say something to Mr. Pomeroy, off the record?

(Whereupon, an off the record discussion was had.)

Mr. Lipson: I show Government's Exhibit marked——

Mr. Pomeroy: (Interposing) Excuse me just a minute.

Mr. Lipson: I am sorry.

Mr. Pomeroy: I might say, for the record, that Mr. Lipson furnished me a new copy of this exhibit, which seems to be the same as the original that has been offered.

Mr. Lipson: Thank you. It was an inadvertent error. In sending it to the photo shop, some material was covered, it was corrected the second time around.

I show Government Exhibit No. 28 to defense counsel for examination and possible objection.

The Court: I think we better take a break here.

Mr. Lipson: Yes, sir.

The Court: Ten minutes.

(Whereupon, at 10:50 o'clock A.M., a recess was had.)

[fol. 340] The Court: Are you ready?

Mr. Lipson: The defendants are examining GX28.

The Court: You know, when you get with the Government you find out all kinds of short abbreviations, and we now have a new abbreviation I hadn't run across or heard of before, GX, Government exhibit, that is pretty good.

Mr. Haggerty: Eventually they will exhaust that alphabet.

Objection for the record, may it please the Court, that the tendered Exhibit No. 28 is beyond the period, beyond the Statute of Limitations.

The Court: Mr. Pomeroy?

Mr. Pomeroy: If the Court please, this would come within the scope of my prior objection, and rather than repeat them in detail I will let it go at that, if that is agreeable with your Honor.

The Court: As long as you reserve your objection.

It may be admitted for the same reasoning heretofore given. I will adopt the same procedure.

Q. (By Mr. Lipson, continuing): Mr. Looker, I show you Government's Exhibit No. 28. I ask you, Mr. Looker, to read that entire one-page document, starting at the [fol. 341] very top, including the printed material.

A. "Huch Manufacturing Company
"Departmental Correspondence
"Date, May 5, 1954.
"Subject, Discussion on Lockbolt Patent License
"To, A. W. Armour, Copies A. E. Benkert, F. A. Dobbe, H. Brilmyer, J. Orloff, A. Stern, J. Sterritt, P. Reynolds, File
"The following is a quick resume of points relating to future discussion for a lockbolt license."

Q. Mr. Looker, I believe you omitted something from the very top portion after the word "from".

A. Correction, "From R. Looker".

Q. One other point, Mr. Looker, is there anything other than Mr. Armour's name appearing where you read it?

A. Yes, Mr. Armour's name has been encircled in blue ink.

Q. What does that signify?

A. It signifies that Mr. Armour was sent this copy.
Q. Would you continue reading the document?
A. Yes.

"I. We should proceed with issuing a lockbolt license.
"II. We should offer a lockbolt license to Townsend under the following general conditions:
"A. That Townsend agrees to manufacture and make available to industry lockbolts 5/16" in diameter through at least 5/8"."

[fol. 342] The 5/8" has been crossed out and the "1/2" written in to the right, followed by an arrow pointing to the words, "Research on 5/8 to be done later".

Q. Do you recognize the handwriting?
A. I do, yes.
Q. Whose is it?
A. Mr. Armour's handwriting.
Would you continue?

A. Paragraph "B. That lockbolts be manufactured and distributed by Townsend—not Cherry.

"C. That lockbolts and collars be suitably identified to prevent field mixing.
"D. That the license be cancellable if Townsend inferior quality hurts Huck."

Adjacent to that sentence, to the right, is a mark, a question mark encircled and the letters "CK", written thereafter.

"E. That Huck give Townsend manufacturing drawings and specifications for lockbolts and collars.
"F. License to be non-exclusive.
"G. Royalties. Commercial business—7½%. Aircraft—5%.
"H. That we should determine Townsend's machinery and equipment now available for lockbolt manufacture on through 5/8" in diameter."

The "5/8" has been underlined.

[fol. 343] "III. Points not fully discussed.
"A. Should Townsend sell lockbolts or Huckbolts."

The word "lockbolts" has been crossed out, and the word "Huckbolts" has been underlined in red pencil.

"B. Price maintenance provisions.
"C. Minimum royalties.
"D. Improvements."

The word, handwritten word paren clause paren has been put in.

"E. Termination. (Life of patent)
"F. Favored license clause."

Under that the letter "G" has been written in red pencil.

"Very best regards, "R. Looker."

The memorandum has been initialled in the lower left-hand corner of the document with the letters RL:rm.

Q. Are there any handwritten notations on the right hand corner, lower right hand corner?

A. Yes.

Q. What are they?

A. The words, "Meeting John Sterritt 5-6-54".

Q. Do you recognize that handwriting?

A. I do, yes.

[fol. 344] Q. Whose is it?

A. Mr. Armour's.

Mr. Lipson: Thank you.

The Court: How about the handwriting under Paragraph 3, do you recognize that handwriting?

A. I do, yes.

The Court: And whose is that?

A. That is Mr. Armour's as well.

The Court: All right.

Mr. Lipson: Thank you, Mr. Looker.

Mr. Dickey: Mr. Lipson, may I have the witness look at the signature above the 5-6-54 in that Exhibit 28?

Mr. Lipson: Let me get a copy.

I am afraid I don't understand your point, Mr. Dickey.

Mr. Dickey: Well, there is some signature or initials under the legend 5-6-54.

Mr. Lipson: I am willing to bring that out, your Honor, but in that condition I'd like to move into evidence Government Exhibits 21, 22, and 23, earlier identified.

The Court: Well, maybe we can agree. Go ahead, let's see, he has asked for it, so can you identify the signature or the initials?

[fol. 345] A. May I see the document?

Mr. Lipson: Your Honor——

The Court: Let's see if he can do it.

A. You are referring to the initials on the lower right hand corner of the document?

Mr. Dickey: Yes, I am.

A. Those are the initials of Alfred E. Benkert.

Mr. Lipson: Your Honor, at this time I would like to show how those initials ever came there, that is the purpose for moving in 21, 22 and 23.

The Court: You mean you would compare signatures?

Mr. Lipson: No, your Honor, the contents of these affidavits, that is 21, 22, 23 explain how Mr. Benkert's initials were placed, and determines the time that Mr. Benkert's initials were placed on that document.

The Court: I think I understand it. Do you understand how they happen to be placed there?

Mr. Dickey: Merely as an identification of the document at the time it was furnshed the Government under subpoena.

Mr. Lipson: Right, and it has nothing to do at all with the handwriting notations by Mr. Looker, that is why I moved these three affidavits into evidence in order to establish that conclusively.

[fol. 346] The Court: I don't think there is any dispute about that.

Mr. Haggerty: There is no dispute about it, no controversy about it.

Mr. Lipson: As long as it is understood how those initials came there, and it has no relationship to the document itself.

The Court: All right.

Mr. Lipson: I now show Goverhment Exhibit No. 29 to defense counsel for examination and possible objection.

The Court: Has it been examined?

Mr. Haggerty: How was that, your Honor?

The Court: Has it been examined, have you examined it?

Mr. Haggerty: Yes, your Honor. Is that a duplicate of 27?

Mr. Lipson: It is: The contents of the document is a substantial duplicate of the earlier Exhibit No. 27. The first three pages of 27, and this is merely being introduced for the additional marginal notations that appear in the upper margin of the first page, and on the right hand—strike that—the left hand margin of the first page.

Mr. Haggerty: The left hand margin of the first page?

[fol. 347] Mr. Lipson: The left.

The Court: I see nothing on my left hand margin.

Mr. Lipson: The right hand margin, I am sorry, the distribution list I meant, your Honor.

The Court: Merely introduced to show that. The exhibit is identical with, what is the other number?

Mr. Lipson: I believe it was 27, your Honor.

The Court: 27.

Mr. Haggerty: For the purposes of the record we object, may it please the Court, it is not within the period of the Statute of Limitations.

The Court: The same as before. Mr. Pomeroy?

Mr. Pomeroy: Same objection, your Honor.

The Court: Same thing. All right, it may be admitted.

Q. (By Mr. Lipson, continuing): Mr. Looker, I show you Government's Exhibit No. 29, is that the same exhibit you just finished reading previously to the jury?

A. Yes, it appears to be a ribbon copy of the Exhibit 27, yes.

Q. What was the title of that so it might refresh the recollection of the jury, and I won't have to read the entire thing?

A. "Factors relating to the establishment of a second [fol. 348] source for Huckbolt manufacture by license agreement."

Q. Are there any written notations that appear on the right hand margin, the right hand margin?

A. Yes, there are.

Q. Do you recognize the handwriting?

A. I do.

Q. Whose handwriting?

A. It is my own.

Q. What are the notations?

A. The notation was the word "Armour," it is written and encircled.

Q. What does that signify?

A. It indicates that the copy, that this copy was intended for distribution to Mr. Armour.

Q. And what are the others?

A. Below that the word, "Benkert, Dobbe, Reynolds, Looker, and Stern".

Q. Is there any writing on the upper margin of this document, the first page?

A. Yes.

Q. Do you recognize the handwriting?

A. I do.

Q. Whose handwriting?

A. Mr. Armour's.

Q. Would you read the notation itself?

[fol. 349] A. Yes, "Meeting held 5-5-54, Orloff-FAD-Bril-RL-AEB & AWA".

Q. Do you know who "FAD" is?

A. Yes.

Q. Would you tell that to the Jury?

A. Frank A. Dobbe.

Q. And Bril?

A. Is a man by the name of Harold Brilmeyer.

Q. RL?

A. Myself.

Q. AEB?

A. Mr. Benkert.

Q. And AWA?

A. Mr. Armour.

Mr. Lipson: Thank you, Mr. Looker.

I show Government Exhibit No. 30 to the defense counsel for examination and possible objection.

Mr. Haggerty: For the purpose of the record an objection is noted because it is not within the period of the Statute of Limitations.

The Court: Mr. Pomeroy?

Mr. Pomeroy: Same objection as previously, your Honor.

The Court: It may be received.

Q. (By Mr. Lipson, continuing): Mr. Looker, I show you Government's Exhibit No. 30. Would you read that one-

[fol. 350] page document from the very top including the printed material?

A. Yes. "Huck Manufacturing Company
"Departmental Correspondence
"Date, June 23, 1954
"Subject, Townsend Company
"To, A. W. Armour and A. E. Benkert Copies Sterritt",

encircled, and the word "File

"From, R. Looker
"As you know, I met with John Sterritt Tuesday last to discuss the Townsend and Illinois Tool Agreements. John's final draft of June 22 on the Townsend agreement appears to be the final draft and he will be ready to send same along to Johnson just as soon as he gets concurrence from us.
"I have read the agreement over and it appears to be very good and most favorable for both Townsend and Huck. If we may have your concurrence, we would like to proceed.

"Very best regards, "R. Looker."

Q. Is there any stamp appearing on this document?
A. There is, yes.
Q. Do you remember the stamps?
A. I do.
Q. What are they?
A. It is the stamp of—at the lower right hand corner of the document is the stamp used by the firm, Harness, [fol. 351] Dickey and Pierce to indicate receipt of mail.
Q. Do you mean the left hand corner?
A. Correction, left hand corner.
Q. Are you familiar with the stamp on the right hand corner?
A. Yes, the stamp on the right hand corner is the stamp used by Harness, Dickey and Pierce to indicate distribution of mail.
Q. Is there any notations, any particular initials that you can recognize?
A. Yes, on the stamp on the right hand corner of the document the letters J. C. S. have been checked both on the left and on the right.

Q. What does that signify and who is J. C. S.?

A. J. C. S. is John C. Sterritt.

Q. And what do the checks indicate? Do you know what the check marks indicate?

A. I can testify that it appears to me they indicate that he had received this document.

Q. Well, I won't ask you that.

Mr. Haggerty: I ask that it be stricken then.

The Court: It may be stricken.

Mr. Lipson: Your Honor, I show defense counsel Government Exhibit No. 33 for examination and possible objection.

[fol. 352] The Court: Thirty-three?

Mr. Lipson: We are skipping some because I think they would merely be repetitive.

The Court: For the Court Reporter, so we don't have to change numbers again, we will skip Exhibit 31 and 32.

Mr. Haggerty: For the purpose of the record may it please the Court, we object to it as not being within the period of the Statute of Limitations.

Mr. Pomeroy: I would have my original objection to this document, your Honor.

The Court: All right, it may be received.

Mr. Lipson: With your permission, your Honor, may I read the relevant portions of this document?

The Court: All right.

Mr. Lipson: Title, "United States District Court for the Ninth Circuit, Townsend Company, Appellant, versus Huck Manufacturing Company, Appellee. Stipulation to dismiss.

"Appellant and Appellee in the above-entitled appeal, by their respective attorneys, hereby agree and stipulate that the above appeal be dismissed without costs to either party, both with respect to appeal costs and District Court costs," the date that appears is September the 17th, 1954.

[fol. 353] The Court: All right.

Mr. Lipson: I show counsel for the defendants, Government Exhibit No. 34 for examination and possible objection.

Mr. Haggerty: For the purpose of the record, object to the offer of Exhibit 34 because it is not within the period

of the Statute of Limitations, and I think further that it is irrelevant and immaterial.

Mr. Pomeroy: Same objection as previously, your Honor.

The Court: It may be received.

Q. (By Mr. Lipson, continuing): Mr. Looker, I show you Government's Exhibit No. 34. Mr. Looker, I ask you to read the entire contents of that one-page document.

A. "CC: Armour
Benkert
C. Armour
Braund
Westrick
File."

Q. Before we proceed any further, I'd like to identify the persons that we haven't already identified on that list.

Who is C. Armour?

A. C. Armour is Charles Armour.

Q. Does he bear any relationship to the defendant in [fol. 354] this action?

A. Yes, he is Mr. A. Watson Armour's brother.

Q. Has the name Braund come up previously in connection with this proceed?

A. No.

Q. Who is Mr. Braund?

A. I don't remember.

Q. Will you continue reading the letter?

A. Yes.

"April 20, 1956.

"Mr. Paul Horst
"Assistant to the President
"The Townsend Company
"New Brighton, Pennsylvania

"Dear Paul:

"I wish to thank you for the many courtesies extended during our very pleasant visit to New Brighton earlier this week. Your hospitality was certainly appreciated and we certainly appreciate the opportunity also of working with your organization more socially in some of our common problems.

"There is one point just brought to my attention con-

cerning the pricing of our aircraft Huckbolts which I think you might wish to look into. When we offer the Aircraft Huckbolt for sale to the Navy Department, Bureau of Aeronautics, central purchasing in Philadelphia, we have a packaging charge to package the parts in accordance [fol. 355] with Government specifications. This is overseas type packing and is fairly detailed. You may have been or may be asked to do the same and our prices are 60¢ per box for the 3/16, 80¢ per box for the 1/4, $1.00 per box for the 5/16", and $1.20 per box for the 3/8". For example, if they want the 1/4" aircraft Huckbolt, 100 pieces per box, we charge $8.00 per thousand extra; and if they want 25 pieces per box, we charge $32.00 per thousand extra.

"Again many thanks for your hospitality.

"Very sincerely yours, "Huck Manufacturing Company.
"Robert Looker, "Vice President in Charge of Sales."

Mr. Lipson: Thank you, Mr. Looker.

Your Honor, in marking the exhibits yesterday after the Court session, I inadvertently omitted a document which I ask the clerk to mark now as 34A. I believe copies have already been distributed to defense counsel.

I believe your Honor has a copy.

The Court: Yes.

(Whereupon a document was marked as Government Exhibit 34A by the reporter.)

Mr. Lipson: I show Government Exhibit marked 34 to defense counsel for examination and possible objection.

The Court: This is the same as 33?

[fol. 356] Mr. Lipson: I believe it is 34A, your Honor.

The Court: This is the same as Government Exhibit 34 except for——

Mr. Lipson (Interposing): Except for certain notations that appear on it.

The Court: All right. I assume defense counsel have the same objection?

Mr. Haggerty: Note the same objection.

The Court: All right, it may be received.

Q. (By Mr. Lipson, continuing): Mr. Looker, I will show you Government Exhibit 34A, directing your attention to

the distribution list at the very top of the page, are any names encircled?

A. Yes.

Q. Whose name?

A. Mr. Armour's name is encircled in red pencil.

Q. What does that indicate?

A. It indicates that that copy was intended for distribution to Mr. Armour.

Q. Are there any date stamps appearing on this document?

A. Yes.

Q. What is the date stamp?

A. In the upper left hand corner of the document is the date stamp, showing April 24, 1956, with initials I can't read above it.

[fol. 357] Q. This is a copy of the letter you just read, is it not?

A. It appears to be.

Mr. Lipson: I show Government Exhibit marked No. 35, which consists of two pages to counsel for the defendants for examination and possible objection.

Mr. Haggerty: Object to it, may it please the Court, the — reason not being with the Statute of Limitations.

Mr. Pomeroy: Same objection, your Honor.

The Court: All right, it may be received.

Mr. Lipson: Your Honor, the document appears to be coming apart, may I staple the two sections together before I give it to the witness?

Q. (By Mr. Lipson, continuing): Mr. Looker, I show you Government's Exhibit No. 35, would you read the first page, the letter of Government Exhibit 35?

A. Yes.

"May 9, 1956
"Mr. Paul Horst
"Assistant to the President
"Townsend Company
"New Brighton, Pennsylvania

"Dear Paul:

"We have a temporary condition where certain of our aircraft companies are using an electrofilm with collars

[fol. 358] and have no need for color anodizing with collar so treated."

Q. May I stop you there, Mr. Looker?

A. Yes.

Q. And ask you what electrofilm is?

A. Yes. Electrofilm is a compound, it is a dry lubricant which serves to—correction, which is applied to materials for the purpose of providing a permanent lubricating surface to the objects so coated.

Q. And the phrase that you just quoted, "color anodizing", what does that mean?

A. Anodizing is a means of protecting aluminum against corrosion, and color anodizing is a color process which is sometimes applied with the anodizing process.

Q. Would you continue reading the letter, please?

A. "We hope to be able to kill this with our new lubricant which we are working on but for the interim period have established collar prices for the 2024 aluminum alloy both the present color anodized and nonanodized and both with and without electrofilm. A copy of this tabulation showing all of the possible variations is attached hereto, and we would like to ask that the prices be adherred to in accordance with our existing agreement.

"The summary made is to prevent any misunderstanding which may exist.

"Very best regards,

[fol. 359] "Huck Manufacturing Company.

"Robert Looker, "Vice President in Charge of Sales.

"RL:mb
"Encl.

cc: Mr. Fred Dickenson"—correction, the word has been misspelled, it is "Fred Dickerson," it is spelled Dickerson.
"Mr. H. E. Chilcoat
"Mr. Armour
"Mr. Benkert
"File", and the word file is encircled in red.

Q. What does the phrase "Encl." refer to?

A. That there were enclosures sent with this document.

Q. Will you turn to the second page of this document? What is the title of the tabulation that appears on that second page?

A. "Huckbolt 2024 Collar Prices".

Q. And the next line?

A. "Effective April 9, 1956".

Q. Would you describe the nature of the tabulation that follows?

A. Yes, the tabulation following is a color price listing showing all 2024 aluminum alloy lockbolt collars various sizes, quantities, point of sale and coating or finish, and the prices per thousand pieces for the parts under each of those circumstances.

[fol. 360] Mr. Lipson: Thank you, Mr. Looker.

I show Government Exhibit No. 36 to counsel for the defendants for examination and possible objection.

Mr. Haggerty: For the purpose of the record, may it please the Court, an objection will be noted that the proposed exhibit is not within the Statute of Limitations.

Mr. Pomeroy: If the Court please, I would like also to object for the reasons previously stated and because for the further reason that it appears from the face of the document that this is an activity or an action taken pursuant to the agreement of September 14, 1956—'54, excuse me.

The Court: It may be received.

Mr. Lipson: Thank you, your Honor.

Q. (By Mr. Lipson, continuing): Mr. Looker, I will show you Government Exhibit No. 36. Would you just read to yourself, examine to yourself, not out loud, the first page of that document?

Are you familiar with the circumstances that caused you to write that document, the background circumstances?

A. I am, yes.

Q. Would you first relate the background circumstances to the Jury?

A. I received a report from the company salesman in [fol. 361] Atlanta, Georgia, by the name of Frank De Loach to the effect that the Lockheed Aircraft Company located in Marietta, Georgia, had objections to our packaging of lockbolts, and that the Townsend Company had offered the

Lockheed Company lockbolts for sale in a more favorable packaging plan to the Lockheed Company.

Q. Would you now read the first page of Government Exhibit No. 36, the entire document?

A. Just the first page?

Q. Just the first page.

A. "Huck Manufacturing Company
"Departmental Correspondence
"May 10, 1956
"Subject, Lockheed Aircraft Corporation, Marietta, Georgia
"To, R. Looker
"Copies, Mr. A. W. Armour, Mr. A. E. Benkert Representative, Mr. Albritton, Mr. Pelletier, Mr. Braund."

Q. I am sorry, Mr. Looker, I think we are looking at different pages. May I have yours? I think you are reading from the second page, are you?

A. Did you ask me to read from the second page?

Q. No, the first page.

[fol. 362] A. I am sorry.

Q. I think we can eliminate the necessity of reading the second and third pages from what you previously said.

Would you read the first page?

A. Yes.

"Huck Manufacturing Company
"Departmental Correspondence
"Date, May 11, 1956
"Subject, Lockheed, Marietta—Your Memo of May 10, 1956
"To, Mr. Westrick

Copies Armour, Benkert, DeLoach, Albritten, Pellettier, Braund and File"

the word file has been encircled.

"From R. Looker"—correction, "Robert Looker".

"In reply to the subject memo, I contacted Paul Horst on the matter of packaging and he has indicated to me that he will make it clearly understood to the Cherry Rivet Division immediately that they are to offer packaging to aircraft companies just exactly the way we offer packaging

as expressed in the copy of your teletype to Mr. Luke on the first page of the subject memorandum."

Q. Before you continue, would you identify who Mr. Luke is?

A. Mr. Luke was the buyer at the Lockheed Company in Georgia.

Q. Would you continue, please?

A. "He indicated that it could be possible that some deviation from this expressed policy might have been made by the Cherry Rivet Division of Townsend in lieu of any [fol. 363] better information but that the latest up-to-date information on packaging has been sent to Townsend and that we should hear no further from difficulties of this type.

"I also brought up the deal mentioned on the second page for inter-company grouping, and he definitely agreed that this is something that would be completely out of the picture and that they would not allow and that he will make certain that the Cherry Rivet Division understands.

"Many thanks for your very complete report. I do think that the situation is now in hand."

Q. What was that last paragraph?

A. "I do think that the situation is now in hand.

"Very best regards, Robert Looker.

"RL:mb".

Mr. Lipson: Thank you.

I now show counsel for defense Government Exhibit No. 37 for examination and possible objection.

Mr. Haggerty: For the purpose of the record, may it please the Court, objection that it is not within the Statute of Limitations.

The Court: Mr. Pomeroy, your same objection?

Mr. Pomeroy: Same, your Honor.

The Court: It may be received.

[fol. 364] Q. (By Mr. Lipson, continuing): Mr. Looker, I show you Government Exhibit No. 37, and I ask you to look at the first three paragraph- of that piece of correspondence and just examine it silently to yourself.

Mr. Looker, is the subject matter contained in that first three paragraph section the same thing you just spoke of

before with respect to the packaging of lockbolts for Lockheed?

A. Yes.

Q. Would you read the heading of the document, the printed portion down through the part "from"?

"A. Huck Manufacturing Company
"Departmental Correspondence
"Date May 21, 1956
"Subject, Lockheed, Marietta—Your May 9, 1956 Contact Report
"To, DeLoach
Copies Listed Below
"From, Robert Looker."

Q. Will you now read the paragraph, the fourth paragraph off that page?

A. Just between us two, Cherry will go along with our identical policy so it might be necessary to hold Luke's hand for a week or so until he gets the full story out of Cherry."

Q. Would you now turn to the second page of that memorandum and would you read the third paragraph from the [fol. 365) bottom starting with "I have already"?

A. "I have already taken the matter of split quantities up with Townsend and they will not go along with the deal, neither will we, of splitting quantities with two vendors and asking for the lowest price from each."

Q. Would you read the signature portion of this document?

A. "Very best regards,
"Robert Looker".

Q. And to whom were copies distributed?

A. Copies were distributed to "Armour, C. Armour, Denkert, Brilmyer, Albritton, Murphy, Pelletier, Westrick," and to "File", file is encircled on this copy.

Q. For the purposes of the record will you identify, please, Albritton and Murphy, whom I don't believe have been previously identified?

A. Yes, Mr. Albritton was the company's production

manager, and Mr. Murphy was in charge of production schedules.

Mr. Lipson: I now show to defense counsel Government Exhibit No. 38 for examination and possible objection.

Mr. Haggerty: For the record, not within the Statute of Limitations, I so object.

Mr. Pomeroy: If the Court please, I was just looking over some of these other exhibits including this one, and up to Exhibit No. 69, I believe it is, and they are all out-[fol. 366] side the statutory period, and if it is agreeable with your Honor I would like to make a blanket objection to them that we don't have to burden the record, at least with my objection along the same lines as I made with reference to Exhibits 24 and 26, unless there is some special item which I might wish to object to especially.

I don't wish to bind Mr. Haggerty to this.

The Court: The Court will recognize these objections as being made by both of you. However, if there is any special additional objection I wish you would call it to our attention for the record.

Mr. Pomeroy: Thank you.

The Court: So the objections from both of you will be standing objections to all these exhibits as we go along.

Mr. Pomeroy: Thank you, sir.

Q. (By Mr. Lipson, continuing): I show you Government's Exhibit No. 38. I ask you to read Government Exhibit 38, Mr. Looker.

A. "cc: Armour, C. Armour, Benkert, F. DeLoach, File."

Q. Who is F. DeLoach?

A. F. DeLoach is a man by the name of Frank DeLoach, who is the company sales representative in Atlanta, Georgia.

Q. Would you continue, please?

[fol. 367] A. Yes.

"July 3, 1956

"Mr. Paul Horst, President

"Townsend Company

"New Brighton, Pennsylvania

"Dear Paul:

"I understand from our Atlanta representative that your Cherry Division offers prepaid premium shipments

when they are behind schedule which is a little stiff competition and gives them a competitive edge which we do not enjoy.

"I wondered if you would look into this in view of our price equalization agreement.

"Very sincerely yours, Huck Manufacturing Company, Robert Looker."

Q. Mr. Looker, what is meant by the phrase "prepaid premium shipments", what does that mean?

A. It means that the producer ships by fast premium means at his expense.

Q. What is meant by the phrase "premium means"?

A. An example of that would be by air express or by air cargo.

Q. As opposed to how normal shipment was made?

A. As opposed to possibly truck shipment or rail shipment.

Q. And who would pay the air cargo freight?

A. On prepaid premium shipment the producer or shipper would pay the air cargo bill.

[fol. 368]

Q. Thank you. Mr. Looker, with respect to the premium shipments on air cargo shipments, do you recall whether or not any satisfaction was received from Mr. Horst of the Townsend Company with respect to this letter that you just read?

A. I don't recall.

Mr. Lipson: Do I understand defense counsel, that you do not wish to see the copies of the documents?

Mr. Haggerty: No, we would like to see them.

Mr. Lipson: I will show you Government Exhibit 39 for examination and possible objection.

Mr. Haggerty: Same objection.

The Court: Mr. Pomeroy has the same objection.

Mr. Pomeroy: That's right.

The Court: It may be received.

Q. (By Mr. Lipson, continuing): Mr. Looker, I will show you Government Exhibit No. 39 and ask you to read Government Exhibit 39 starting with the letterhead.

A. "Huck Manufacturing Company
"Departmental Correspondence

"Date, July 3, 1956

"Subject, Lockheed, Marietta—Your Memo of June 16, 1956

"To, Frank DeLoach

Copies, Armour, C. Armour, Benkert and File"

the word file has been encircled.

"From Robert Looker

[fol. 369] "In reply to your subject memorandum, I first want to thank you for the very complete comprehensive report on the request of Hardy Luke and your analysis.

"We have gone back to the Townsend Company asking them to stop their premium shipments for behind schedule orders and this should be cleared up very shortly.

"The last sentence of your memorandum read 'If I might be of further service to you please notify me.'

"I think the thing to do here is to try to keep on the best side of Hardy Luke by any and all means that are possible and ethical.

"I am sure you can do it and that we will hold the business you have gained so painfully.

"Very best regards, Robert Looker.

"RL:mb".

Mr. Lipson: Thank you.

I now show Government Exhibit No. 40 to defense counsel for examination and possible objection.

Mr. Haggerty: Same objection, may it please the Court.

The Court: It may be received.

Q. (By Mr. Lipson, continuing): Mr. Looker, I now show you Government Exhibit No. 40, would you read that letter starting with the distribution list?

[fol. 370] A. "cc: Armour, C. Armour, Benkert, Mathews, Egnot File".

Q. Would you identify Mr. Mathews?

A. Mr. Mathews was the sales manager of the company.

Q. Would you identify Mr. Egnot?

A. Egnot was a salesman.

The Court: When you say sales manager, you mean of Huck?

A. Yes, of Huck Company.

Q. (By Mr. Lipson, continuing): Would you read the remainder of the letter, please?

A. Yes.

"July 3, 1956
"Mr. Paul Horst
"Assistant to the President
"Townsend Company
"New Brighton, Pennsylvania

"Dear Paul:

"Our Buffalo representative reports that you have permitted grouping of non-standard commercial Huckbolts (about grip 23 or 24) with short standard grips."

Q. Would you explain what is meant by the term grouping in this context?

A. Yes. Grouping is a term used to describe a pricing [fol. 371] practice where one size of a part—correction, where the quantity required for one size of a part is added to the quantity required for a second part, and the total quantity is the quantity on which the price for both are based.

Q. Is it a price advantage to a consumer to group or to the producer to allow to group?

A. It is to the consumer.

Q. Would you continue reading the remainder of that letter?

A. Yes.

"This report comes from a Mr. Stutz, Shop Superintendent of Niagra Blower Company.

"We only permit grouping of the part numbers shown in the price list and we would like to ask that you do likewise.

"Could we hear from you in this regard.

"Very sincerely yours, "Huck Manufacturing Company,
"Robert Looker

"RL:mb".

Mr. Lipson: Thank you.

I now show Government Exhibit marked 41 to defense counsel for examination and possible objection.

Mr. Haggerty: Note for the record the same objection.

Q. (By Mr. Lipson, continuing): Mr. Looker, I will now show you——

[fols. 372-373] The Court: It may be received.

Mr. Lipson: I am sorry, your Honor.

The Court: All right, it may be received.

* * * * * * *

[fols. 374-377] Mr. Lipson: Thank you. I show Government's exhibit marked 42 to defense counsel for examination and possible objection.

Mr. Pomeroy: Is 41 in?

The Court: Yes.

Mr. Haggerty: 41 is in, yes. Letter of December 12, '55.

Mr. Pomeroy: Thank you.

Mr. Haggerty: For the purpose of the record, the same objection, your Honor.

The Court: Mr. Pomeroy, I assume the same objection?

Mr. Pomeroy: Yes, I made a blanket objection, yes, your Honor.

The Court: All right. Fine.

Mr. Lipson: Thank you.

The Court: It may be received.

* * * * * * *

[fols. 378-380] Mr. Lipson: I am showing Exhibit No. 43 to defense counsel for examination and possible objection.

Mr. Haggerty: For the purpose of the record, the same objection.

The Court: All right. Mr. Pomeroy, the same thing?

Mr. Pomeroy: Yes, your Honor.

The Court: All right. It may be received.

* * * * * * *

[fol 381] Mr. Lipson: I show Government Exhibit marked No. 44 to defense counsel for examination and possible objection.

Mr. Haggerty: For the purpose of the record, the same objection.

The Court: Mr. Pomeroy's is noted as well. It may be received.

Mr. Lipson: Thank you, your Honor.

Q. (By Mr. Lipson) I show you Government Exhibit No. 44, Mr. Looker. I will ask you to read that one page document, from the letterhead through the signature.

A. (Reading):

"Huck Manufacturing Company, "Departmental Correspondence, "Dated December 27, 1955."

Q. Is there any kind of stamp impression near the date?

A. Yes, adjacent to the date, to the right, the rubber stamp "A.W.A. III, December 28, 1955."

(Reading): "Subject: Freight Equalization with the Townsend Company.

[fol. 382] "To: Mr. Armour."

There is a checkmark by his name.

"Copies: Messrs. Benkert, Mathews, Pelletier, Reynolds and File.

"From: Robert Looker.

"Paul Horst called me yesterday, December 21, to advise that Dickinson is still holding out for prepaid freight, and that he does not feel that freight equalization is a basis for a satisfactory solution to the freight problem."

Q. Would you stop at that point, Mr. Looker, and explain the difference between prepaid freight and freight equalization?

A. Yes. I believe I have explained what freight equalization is.

Q. I believe you have.

A. Prepaid freight is the process where the producer or the shipper pays the entire freight bill to the consumer.

Q. Would you continue, then, from the second sentence of that document?

A. Yes.

(Reading):

"I believe that this subject has become now important enough to us to necessitate a meeting with Mr.

Dickinson, himself, so that we can arrive at some suit-
[fol. 383] able arrangement.

"He will, of course, go along ith the freight equalization for the balance of the two year period, for we are in a position, of course, to dictate his actions during that time.

"I suggest that we make this a topic of discussion during one of your early trips to Detroit.

"Very sincerely yours, "Robert Looker. "RL:mb."

And my initials just above my name.

Q. Thank you.

Mr. Lipson: I show Government Exhibit marked No. 45 to defense counsel for examination and possible objection.

Mr. Haggerty: For the purposes of the record, I object to it. It is not within the period of the statute of limitations.

The Court: Mr. Pomeroy's objection continues. It may be received.

Q. (By Mr. Lipson) Mr. Looker, I show you Government Exhibit marked No. 45. Mr. Looker, I ask you to read that document, starting with the letterhead.

A. (Reading): "Huck Manufacturing Company, "De-
[fol. 384] partmental Correspondence."

Q. Is there any written notations at that point in the margin of the document?

A. At the top—the top righthand part of the page there appears to be the letters "A.E.B" written, followed by the numbers "5-1-56" and just below that a red rubber stamp impression with the letters "A.W.A. III, March 9, 1956."

The date of the memorandum date: March 1, 1956.

(Reading):

"Subject: Visit From the Townsend Company—Mr. Paul Horst and Mr. George Bentley.

"To: Mr. Armour——"

Q. (Interposing) Mr. Looker, have we—I don't believe we previously identified Mr. George Bentley. Who is he?

A. Mr. Bentley was the Sales Manager of the Townsend Company.

* * * * * * *

[fol. 385] Q. Are there any handwritten notations on that document?

A. Yes, there are.

Q. Do you recognize the handwriting?

A. I do.

[fol. 386] Q. Whose handwriting is it?

A. Mr. Armour's.

Q. What do the notations say?

A. (Reading): "It was agreed to go along as we are at present."

Q. Thank you, Mr. Looker.

Mr. Lipson: Your Honor, the Government will not offer the exhibit previously marked as No. 46, it is only a carbon copy of the other one.

I show Government Exhibit No. 47 to defense counsel for examination and possible objection.

Mr. Haggerty: Same objection to Government's proposed Exhibit 47.

The Court: All right. Mr. Pomeroy's is the same. It may be received.

* * * * * * *

[fol. 387] Mr. Lipson: I now show Government Exhibit 48 to defense counsel for examination and possible objection.

[fol. 388] Mr. Haggerty: Same objection, not within the period of the statute of limitations.

The Court: Mr. Pomeroy, same reason.

Mr. Lipson: Thank you.

The Court: And it may be received.

* * * * * * *

[fol. 389] Is there any marginal notation?

A. There is.

Q. Do you recognize the handwriting of that marginal notation?

A. Yes.

Q. Whose is it?

[fol. 390] A. Mr. Armour's.

Q. The word "stump" referred to in this memorandum, what does that refer to?

A. Refers to the Lockbolt fastening device similar to the Lockbolt which has no extending pin tail.

Q. Is that the Lockbolt stump that you have previously testified to?

A. Yes.

Q. I direct your attention to the very last part of the last sentence that you read to us. What is meant by the phrase "our complete cooperation for the entire line"?

A. I don't remember what I meant at that time.

Q. Thank you, Mr. Looker.

Mr. Lipson: Your Honor, we will not introduce—or offer Exhibit No. 49 which has previously been marked, it is merely a carbon reproduction.

I show Government Exhibit No. 50 to defense counsel for examination and possible objection.

Mr. Haggerty: May I inquire does Government counsel intend that the attachment to the exhibit be included as part of the exhibit?

Mr. Lipson: Yes. The specimen letter?

Mr. Haggerty: Yes.

Mr. Lipson: Yes.

Mr. Haggerty: Same objection, may it please the [fols. 391-392] Court.

The Court: It may be received.

Mr. Lipson: Thank you, your Honor.

Q. (By Mr. Lipson) Mr. Looker, I show you Government Exhibit marked No. 50. I ask you to read the head note—the heading section of that first page of that document.

A. The heading of the first page?

Q. That's right.

A. (Reading): "Huck Manufacturing Company, Departmental Correspondence. Date: February 15, 1955. Subject: AL-ALS Price Increase."

Q. Would you stop for a moment and define what "AL and ALS" means?

A. AL is a designation referring to the aircraft lockbolt, while ALS refers to the aircraft lockbolt stump.

* * * * * * *

[fols. 393-395] Mr. Lipson: I now show Government Exhibit marked 51 to defense counsel for examination and possible objection.

Mr. Haggerty: Note the same objection, may it please the Court, for the purpose of the record.

The Court: All right, Mr. Pomeroy's is noted, too. It may be received.

• • • • • • •

[fol. 396] Mr. Lipson: I now show Government Exhibit marked 52 to defense counsel for examination and possible objection.

Mr. Haggerty: Note the same objection for the purpose of the record.

The Court: Mr. Pomeroy's is noted as well. It may be received.

Mr. Lipson: Thank you, your Honor.

• • • • • • •

[fol. 397] Q. Mr. Looker, in the tabulation following that portion of the document, would you just read those items which are Lockbolt items?

A. Yes. CL Pins plus 8-; CL Collars (LC-F, LC-I and 2 LC-R) plus 10-; AL Steel 3/16 & 1/4" dias. plus 5-; 5/16 and 3/8" dias. plus 20-; Aluminum-5/32", 3/16" & 1/4" dias., plus [fol. 398] 10-; 5/16 and 3/8" dias., plus 20-; ALS plus 20-; SAL 3/16" and 1/4" dias., plus 5-; 5/16" and 3/8" dias., plus 20-; SLS, plus 20-".

Q. Thank you, Mr. Looker.

Mr. Lipson: I will show Government Exhibit marked 53 to defense counsel for examination and possible objection.

Mr. Haggerty: Same objection for the purpose of the record.

The Court: Mr. Pomeroy's is also noted. It may be received.

• • • • • • •

[fol. 399] Mr. Lipson: Your Honor, the Government will not offer the exhibit previously identified as 54, for reasons previously noted.

I now show Government Exhibit No. 55 to defense counsel for examination and possible objection.

Mr. Haggerty: Same objection.

The Court: Mr. Pomeroy's is noted as well: It may be received.

• • • • • • •

[fols. 400-401] Q. That is all, Mr. Looker. Are the "Pull Through (PT) and Self Plugging (9SP) blind rivets" lockbolts or are they some other device?

A. They are other devices.

Mr. Lipson: At this time I would like to show Government Exhibit No. 56 to defense counsel for examination and possible objection.

Mr. Haggerty: Same objection, for the purpose of the record.

The Court: It may be received.

Mr. Lipson: Thank you, your Honor.

• • • • • • •

[fols. 402-403] Q. Will you continue, please?

A. (Reading): "As soon as time permits, we will have West Coast price lists established covering the sale of our AL-ALS-CL-SAL-SLS-OS and BL with the 3- included. The West Coast——"

Q. Are those lockbolts devices, Mr. Looker?

A. All except the last two, the OS and BL are not lockbolt devices.

• • • • • • •

[fol. 404] Mr. Lipson: The documents that have been previously marked and identified as Government exhibits Nos. 57 and 58 will not be offered in lieu inasmuch as they are merely carbon reproductions of the one already admitted.

I now show Government Exhibit marked 59 to defense [fol. 405] counsel for examination and possible objection.

Mr. Haggerty: Note the same objection as to the Exhibit 59.

The Court: Mr. Pomeroy's is noted as well. It may be received.

• • • • • • • •

[fol. 406] Mr. Lipson: I now show Government Exhibit marked 60 to defense counsel for examination and possible objection.

Mr. Haggerty: Note the same objection.

The Court: Mr. Pomeroy's is noted as well. It may be received.

Mr. Lipson: Thank you. Thank you, your Honor.

Q. (By Mr. Lipson) Mr. Looker, I show you Government Exhibit No. 60. What date does that exhibit bear?

A. The typed date is July 13, 1956.

Q. What is the letterhead?

A. The Brown-Line Corporation.

[fols. 407-408] Q. What was your relationship with Brown-Line Corporation at that time?

A. I was soon to take over the position of its president.

Q. Is there a rubber stamp impression on this document?

A. There is, yes.

Q. What does it say?

A. It says July 18, 1956, A.E.B.

Q. Who is A.E.B.?

A. Alfred E. Benkert.

Q. Is there another rubber stamp impression on the lower margin of this document?

A. There is, yes.

Q. What is that?

A. It says "Huck—Confidential".

Q. Will you explain to the members of the jury how a Huck Confidential stamp got on a piece of Brown-Line Corporation piece of correspondence?

A. I think it was sort of an error. I intended at the time I wrote this yetter to Mr. Armour to indicate that the letter was not for general publication. We used a—we used this particular rubber stamp in my office for that purpose on other matters and the Huck shouldn't have been on it.

• • • • • • • •

[fol. 409] The Court: Apparently at this time you are still at Huck but using this new stationery, is that it?

A. That's correct. Yes, the letterhead was typed on.

Mr. Lipson: I now show Government Exhibit marked 61 to defense counsel for examination and possible objection.

Your Honor, in order to obviate any possible objections to this document, I would like to make it clear that we are not offering it for the statements of the first three paragraphs of the letter.

Mr. Pomeroy: If the Court please, it is a little hard to separate three paragraphs from the other three that are in it. On behalf of the defendants Townsend and Mr. Dickenson, I object to the offer of this letter as being incompetent, irrelevant and immaterial, and as hearsay and inadmissible.

The Court: Rather than admit it, I assume you will follow along——

Mr. Haggerty: (Interposing) I have no objection to it, your Honor.

The Court: I was suggesting that—you say the fourth paragraph or third paragraph?

Mr. Lipson: I am interested in introducing it primarily for the information contained in the paragraph that begins with the three words "As you will recall."

[fol. 410] The Court: That is four.

Mr. Lipson: Or the third from the bottom, I said originally, your Honor.

The Court: Why not hand the letter to the witness and ask him if he recalls this situation, and he can testify to it from—by having refreshed his recollection.

Q. (By Mr. Lipson) Mr. Looker, I show you Government Exhibit marked for identification No. 61. Mr. Looker, do you recall whether in the year 1959 you ever requested a lockbolt license from the Huck Manufacturing Company, based on your recollection?

The Court: And using this letter to refresh your recollection.

A. Yes, I do recall it.

Q. (By Mr. Lipson) Whom do you recall communicating with?

A. Mr. John C. Sterritt.

Q. Had you ever before received a reply to an earlier request?

A. I am at liberty to read this, am I not?

Q. Yes, you may read from that, but you may only testify from your recollection.

A. From my memory. Yes.

[fols. 411-413] Yes, I recall having received a reply to an earlier request.

Q. Do you recall the nature of that reply?

A. It was——

Mr. Haggerty: (Interposing): I object to it. If it is in writing, it is the best evidence.

The Court: All right, I will admit it.

Mr. Haggerty: Oh, I have no objection to this, but I am objecting to his testifying. If it is in writing, that is the best evidence, and I ask the Government to produce it. I have no objection whatsoever to that letter, your Honor.

The Court: Well, I am going to admit the entire letter as having some probative value and it should be admitted. Go ahead.

. . . . . .

[fol. 414] Mr. Lipson: I'd like to show Government Exhibit marked for identification No. 63 to defense counsel for examination and possible objection.

For the purposes of the record, the document previously marked as 62 will not be offered as it is merely repetitive.

The Court: Pardon?

Mr. Lipson: There was a document previously identified.

The Court: Oh, I see.

Mr. Lipson: As 62, which is a copy of the letter just admitted, and it will not be offered of itself.

The Court: All right.

It is about time we take a recess. We will take ten minutes, please.

(Whereupon a short recess was taken and then the Court was called to order.)

The Court: Now that the parties are here, you may proceed, counsel.

Mr. Lipson: Thank you, your Honor. I believe that defense counsel has been examining Government Exhibit [fol. 415] No. 63.

Mr. Haggerty: I have no objection to Exhibit No. 63, your Honor. It will be noted I have reformed.

The Court: I notice the date on the letter might have something to do with it.

Mr. Pomeroy?

Mr. Pomeroy: I have no objection to that either, your Honor.

The Court: All right. Proceed.

• • • • • • •

[fol. 416] Mr. Lipson: Thank you.

I now show Government Exhibit marked No. 64 to defense counsel for examination and possible objection.

Mr. Haggerty: No objection, your Honor.

[fols. 417-418] The Court: Mr. Pomeroy?

Mr. Pomeroy: If your Honor please, I do object to this letter. It is another letter from this witness on behalf of Brown-Line Corporation to Mr. Sterritt, as counsel for Huck. I object to it as immaterial, irrelevant and incompetent, as far as the Defendants Townsend-Dickenson are concerned, and not binding on them.

The Court: Well, the objection heretofore was that it was without period. This is within the period.

Mr. Pomeroy: This is within the period. I do not object on that ground.

The Court: It may be received.

• • • • • • •

[fols. 419-420] Mr. Lipson:

I now show Government Exhibit marked No. 65 to defense counsel for examination and possible objection.

Mr. Pomeroy: I have the same objection as I had to the two preceding exhibits, if the Court please.

The Court: All right. Mr. Haggerty?

Mr. Haggerty: No objection.

The Court: It may be received.

• • • • • • •

[fols. 421-423] Mr. Lipson: Thank you.

I now show Government Exhibit marked 66 to defense counsel for examination and possible objection.

Mr. Haggerty: As much as I dislike, I must object to this exhibit for the reason that it is not within the period of the statute of limitations.

Mr. Pomeroy: I so object also, your Honor.

The Court: I notice that we are going back to 1954 now, so that the Jury doesn't get confused, and the ruling that has applied earlier heretofore will still be the same, so it may be admitted.

* * * * * * *

[fols. 424-425] Mr. Lipson: Thank you, Mr. Looker.

The document that has previously been identified as Government Exhibit No. 67 will not be offered.

I now show defense counsel Government Exhibit marked No. 68 for possible objection.

Mr. Haggerty: Object to it. It is without the period of the statute.

The Court: For the same reason. Mr. Pomeroy, your objection is noted as well.

Mr. Pomeroy: Thank you.

The Court: It may be received.

* * * * * * *

[fol. 426] Mr. Lipson: Thank you.

I now show Government Exhibit marked No. 69 to defense counsel for examination and possible objection.

Mr. Haggerty: I object to it, as it is without the period of the statute of limitations.

The Court: Mr. Pomeroy, the same?

Mr. Pomeroy: Yes, your Honor.

The Court: It may be received.

[fols. 427-428] Mr. Lipson: Thank you, your Honor.

Q. (By Mr. Lipson, continuing): Mr. Looker, I will show you Exhibit No. 69. What date does that document bear?

A. May 11, 1953.

Q. Would you read the letterhead on that document?

A. (Reading):

"Huck Manufacturing Company, Departmental Correspondence".

Q. Does a stamp impression appear on the top of the document?

A. There are two such impressions, one to the left with the letters "E.B.S. May 15, 1953" and one to the right "A.W.A." "Roman Numeral "III". "May 15, 1953".

Q. What is the subject as written in?

A. (Continuing reading):

"Meeting May 11, 1953 License—Lockbolts ITW".

Q. What does "ITW" mean?

A. It means "Illinois Tool Works".

Q. Would you read the remainder of that document?

A. Yes. (Continuing reading):

* * * * * * *

[fol. 429] Have defense counsel had the opportunity of examining No. 70?

Mr. Haggerty: 70? No.

The Court: I have no 70.

Mr. Lipson: No, your Honor, you haven't. For some reason, we were short of copies on that particular document, and I will give you my copy.

The Court: Is this the so-called cross license agreement?

Mr. Lipson: I believe it is, your Honor.

Mr. Dickey: No objection to Exhibit 70, except to the interlineations and red pencil underscoring and marginal notes.

The Court: The ones that are on the exhibit, I notice they have been erased.

I think that is the one you gave me; is it not?

Mr. Lipson: No, your Honor, I think this red doesn't come out very well on the photocopying process. They appear to be erased. I am not offering the exhibit for the marginal notations and I will delete them. I don't know where the marginal notations came from or where the interlineations came from. We received the document in the same condition in which we find it now.

The Court: If there is any objection to any particular marking there, we can so arrange to have them blocked [fols. 430-437] out.

Mr. Dickey: No, I don't see any particular ones. I don't know what significance they have.

The Court: If you want them blocked out, in the event the jury does desire to examine it, we can have that done at that time. You don't need to do it now.

Mr. Pomeroy: My position is the same as Mr. Dickey's on this, your Honor.

The Court: All right, it may be received subject to those exceptions.

* * * * * * *

[fol. 438] Mr. Lipson: Thank you. I now show Government Exhibit marked 71 to defense counsel and possible objection.

Mr. Pomeroy: If your Honor please, with reference to Exhibit 70, just read into evidence, and Exhibit 71, just offered, these are agreements made on the same date, October 22nd 1958.

The Court: I noted that, too.

Mr. Pomeroy: They do not relate specifically to lockbolts, which is the product involved in this suit, and therefore, for the sake of the record, I would like to object to [fol. 439] the present offer and move that the prior Exhibit 70 be received—to be stricken from evidence on the grounds they are incompetent, irrelevant and immaterial, dealing with subject matter beyond the scope of the indictment in this case.

The same argument would pertain to Exhibit 72, which has not yet been offered, which is another 1958 agreement dealing with a product called blind lockbolts. Perhaps I am anticipating too much here.

The Court: No, that is all right. I am glad you are talking about it now. These are items that are not set forth in the indictment as——

Mr. Pomeroy (Interposing): As we read the indictment, your Honor, that is true.

The Court: And they are matters outside, you allege or argue, the scope of the indictment; is that right?

Mr. Pomeroy: That's right.

The Court: Because they are of other matters, and they are actually, with respect to 70, are the tools for setting and removal of the lockbolt devices, as I see it, and 72 has to do with Huck blind lockbolts, which are not subject to this indictment; is that correct?

Mr. Pomeroy: That would be our construction of it, your Honor.

[fol. 440] The Court: All right. Now, what is the purpose of these?

Mr. Lipson: Your Honor, the indictment, I will use the words of the indictment itself, Paragraph 15(c), in setting forth the manner by which the conspiracy was formulated and effectuated. That paragraph states (reading):

> "That the defendants entered into a series of license agreements by which each corporate defendant agreed to cross license the other for all improvements made in the manufacture of lockbolts and substitutes for lockbolts and related products."

Now, I draw the Court's attention to the language in Government Exhibit No. 70, the agreement formulated by both these corporations.

On the first page (reading):

> "Whereas, Huck and Townsend are both engaged in the development, design, construction, use and sale of tools and equipment and parts thereof which are employed in the installation or setting and removal of lockbolt devices, . . ."

Then, it goes on and in detail——

Mr. Pomeroy (Interposing): What paragraph is that, please?

[fol. 441] Mr. Lipson: The first "Whereas" paragraph on the first page of the document.

The Court: Of which, 70 or 71?

Mr. Lipson: 70. I will deal with them in numerical order.

I think this clearly establishes that these are related, closely related items; therefore, clearly fall within the scope of the indictment.

The Court: However, they are not subject to any patents; are they?

Mr. Pomeroy: They are not subject at least to the patents——

Mr. Lipson (Interposing): So far as I know there is no patent involved in this particular——

The Court: This goes beyond, then, the charge goes beyond the patented articles?

Mr. Lipson: Oh, yes, sir. We haven't phrased the indictment, the Grand Jury didn't phrase it in terms of the patents.

The Court: Alone?

Mr. Lipson: It was phrased in terms of the product.

The Court: All right.

Mr. Pomeroy: Well, if your Honor please, looking at the indictment, 15(c), which Mr. Lipson has referred to as [fol. 442] the appropriate portion of it, the language there speaks of the manufacture of lockbolts and substitutes for lockbolts, and related products.

I would assume that the proper construction of that language, which would mean related in the sense of being other fasteners and not the gun, or tools or equipment by which the fasteners are installed or applied. That was the way, at least, that we have read the indictment.

This, of course, is a matter for your Honor's determination, but for that reason, I would feel that the tools manufactured by each of the companies, and which are part, which are the subject matter of Exhibit 70, are not properly involved in this case, and hence, I move to withdraw the exhibit.

Mr. Lipson: Your Honor, there has already been testimony on the record of this case that the lockbolts cannot be installed without the lockbolt installation tool. You need the tool to make the lockbolt, to install the lockbolt. A closer relationship could hardly be imaginable.

The Court: There was that reference, I noticed, in some of the correspondence, when there was some problem somewhere in the Cherry Hill plant.

Mr. Lipson: Yes, sir. They are intimately connected. One is completely worthless without the other.

The Court: All right. On that explanation, and for [fols. 443-447] that purpose, I will admit them. That goes for 71 and 72, while we have discussed it.

. . . . . .

[fols. 448-455] Mr. Lipson: May I assume, then, that 72 has been admitted, your Honor?

The Court: With the same objection that has heretofore been made.

. . . . . .

[fol. 456] Mr. Lipson: For the purposes of the record, the Government exhibit that has previously been marked and identified as 73 will not be offered.

The Court: I believe it was received, was it not?

Mr. Lipson: That was 72, I believe. The last one.

Mr. Haggerty: 72 was the last one, according to my records, your Honor.

Mr. Lipson: 73, I think, is the carbon copy again.

Mr. Dickey: 72 and 73 are the same thing, are they not?

Mr. Lipson: That is right. We are not offering 73 in-
[fols. 457-458] cidentally, since 72 came in.

The Court: All right, we start on 74 then?

Mr. Lipson: Yes, sir.

I show Government Exhibit marked No. 74 to defense counsel for examination and possible objection.

Mr. Haggerty: Object to the Government's offered exhibit 74 for the reason that it is not within the period of the statute of limitations.

The Court: Mr. Pomeroy, the same objection?

Mr. Pomeroy. Same objection as Mr. Haggerty.

The Court: All right, it may be received.

Robert Looker, a witness called on behalf of the Government, having been previously duly sworn, resumed the witness stand and testified further upon his oath, as follows:

Direct examination. (Continued)

By Mr. Lipson:

Q. Mr. Looker, I show you Government Exhibit marked 74. I would like to ask you to read certain selected portions from that exhibit.

• • • • • • •

[fol. 459] (By Mr. Lipson) Is there any initials appearing on the remainder of that letter?

A. There are the initials A.W.A.: the letter "s".

Q. What does the initials "A.W.A." signify?

A. A. Watson Armour.

[fol. 460] Mr. Lipson: The document that we have previously marked and identified as No. 75 will not be offered.

Mr. Haggerty: May we have the date for the record on that last letter?

Mr. Lipson: Yes, sir. The date appears to be July—date of the letter, on the first page, is July 9, 1954.

Mr. Haggerty: Thank you.

Mr. Lipson: The date of the date stamp, I believe, is July 12 of the same year.

I now show Government Exhibit marked 76 to defense counsel for examination and possible objection.

Mr. Haggerty: May it please the Court, we object to the Government's proffered Exhibit 76 for the reason that it is not within the period of statute of limitations, and with the understanding, of course, that those portions that are underlined and notations made in red pencil are not part of the agreement.

Mr. Lipson: The agreement is offered apart from the red pencilled notations, your Honor.

[fols. 461-463] Mr. Haggerty: And we also note that it has attached to it——

Mr. Lipson: (Interposing) With the Court's permission, we can remove that attachment at this time.

The Court: You mean the top sheet?

Mr. Lipson: Yes, sir, your Honor.

Mr. Haggerty: The top sheet.

The Court: All right, take it off.

Mr. Pomeroy: If the Court please, I also object to it being beyond the period of limitations and because this is an agreement between Huck and another company which should have no probative effect as far as Townsend and Mr. Dickenson are concerned.

The Court: Well, I think it is material as set forth in the opening statement and in the indictment itself and it may be received.

* * * * * * *

[fol. 464] Mr. Lipson: I now show Government Exhibit marked 77 to defense counsel for examination and possible objection.

Mr. Haggerty: Object to the offered exhibit by the Government, namely, Government's Exhibit No. 77, for the

reason it is not within the period of the statute of limitations.

Mr. Pomeroy: I make the same objection as I did to 76, if the Court please.

The Court: It may be received.

Mr. Lipson: Thank you, your Honor. Your Honor, before reading or explaining anything from this agreement, I would like to ask Mr. Looker a question.

Q. (By Mr. Lipson) Mr. Looker, are you familiar with a firm known as Standard Pressed Steel Company?

A. I am, yes.

Q. Would you tell us the nature of the business conducted by this firm?

A. Standard Pressed Steel manufactures, among other things, a line of aircraft bolts and high strength aircraft fastening devices.

Q. Thank you.

• • • • • • •

[fols. 465-466] Mr. Lipson: I now show Government Exhibit marked 78 to counsel for examination and possible objection.

Mr. Haggerty: No objection, may it please the Court.

Mr. Pomeroy: If the Court please, I object only on the ground as to relevancy as to Defendants Townsend and Dickenson.

The Court: It may be received.

• • • • • • •

[fol. 467] Q. (By Mr. Lipson) Mr. Looker, are you familiar with a firm known as Illinois Tool Work, Fastex Division?

A. Yes, I am.

Q. What kind of business are they engaged in?

A. They manufacture commercial fastening devices such as sheet metal screws and the like.

Q. Thank you.

Mr. Lipson: I show Government Exhibit marked 79 to defense counsel for examination and possible objection.

Mr. Haggerty: I have no objection to Government's offered Exhibit No. 79.

The Court: Mr. Pomeroy?
Mr. Pomeroy: No objection, your Honor.
The Court: It may be received.

Q. (By Mr. Lipson) Mr. Looker, I show you Government Exhibit No. 79, do you recognize any of the handwritten notations appearing in the lefthand margin as recognizing the source of the handwriting?
[fols. 468-474] A. I do not.

. . . . . .

[fols. 475-476] Mr. Lipson: Thank you, your Honor. We have no further questions of Mr. Looker at this time.

. . . . . .

[fol. 477] Cross-examination.

By Mr. Haggerty:

Q. Mr. Looker, in reference to statements that you have made to the United States Government, you did furnish the United States Government, did you not, with a memoranda, a statement of activities of Huck Manufacturing Company, which are submitted for consideration by the anti-trust division of the United States Department of Justice, under the name of the Brown-Line Corporation, signed by yourself, on October 27, 1958, isn't that true?
A. Yes.
Q. Prior to October the 27th, 1958, did you make any statements to any representative or agent of the Federal Government?
A. That is in connection with this matter?
Q. Yes, sir.

The Court: By "statement" you mean oral or written?
Mr. Haggerty: I am first speaking of written statements.
The Court: All right.

A. No.
[fol. 478] Q. (By Mr. Haggerty) Did you, prior to October 27th, 1958, make any oral statement to any representative or agent of the United States Government?
A. No, but I must explain my answer.

Q. Well, you will have a chance to explain on redirect examination.

A. I don't know that that question can be answered directly. My I explain it now?

Q. No, this is cross examination.

A. I see.

Q. We have a very able Assistant United States Attorney here that will help you out, Mr. Looker.

Now, Mr. Looker, did you on the 27th day of October, 1958, confer with an assistant U.S. Attorney General of the United States?

A. I am not certain of the date, I did confer with an attorney.

Q. To your recollection, was it at the same time that you conferred with him that you handed to him, or your lawyer handed to him this memoranda which you made and is dated October 27, 1958?

A. May I see the memoranda?

Q. Yes, sir.

Mr. Haggerty: May we—as this is a pretty good copy—have it marked for identification?

Mr. Lipson: I have no objection to that at all.

[fol. 479] (Whereupon, a document was marked Defendant's Exhibit No. A, for identification, by the reporter.)

Q. (By Mr. Haggerty) I hand you the memoranda you requested, in the form of a statement, marked for identification, the Defendant's Exhibit A.

[fol. 480] A. The answer is yes.

Q. (By Mr. Haggerty): Have you had an opportunity to refresh your recollection?

A. Yes.

Q. All right. Now, sir, did you, on the 27th day of October, 1958, have an oral conversation with an Assistant United States Attorney General?

A. Again, I am not certain of the date.

Q. Did you, on or about that date, have a conversation with an Assistant United States Attorney General?

A. Yes.

Q. And where was that conversation held?

A. In Washington, D. C.

Q. And by whom were you accompanied, if anyone?
A. A patent attorney by the name of William Pavitt.
Q. And Mr. Pavitt was your attorney?
A. Yes.
Q. And prior, then, to the date of the memorandum, which is October 27th, 1958, had you had any correspondence by letter or telegram with the Assistant United States Attorneys?
A. Not to my knowledge.
Q. Had you authorized your attorney, and his name is Pavitt?
A. Pavitt, yes.
Q. And how do you spell Pavitt?
A. P-a-v-i-t-t.
[fol. 481] Q. Had you authorized Mr. Pavitt prior to October 27th, 1958, to act on and in your behalf and in behalf of Brown-Line to contact Assistant United States Attorneys?
A. I don't recall.
Q. You have no recollection?
A. I have no recollection, no.
Q. Have you any knowledge as to whether or not Mr. Pavitt, on your order and authorization, had carried on any correspondence or oral conversations with either Assistant United States Attorney Generals, or with any Investigating Officers of the United States Government, prior to October 27, '58?
A. I don't recall.
Q. Now, were you in Washington in the month of — '58, conferring with representatives of the Government on more than one occasion?

The Court: During the year '58?
Mr. Haggerty: 1958.

A. No.
Q. (By Mr. Haggerty, continuing): Did the representatives of the Government confer with you in California in the year 1958?
A. No.
Q. How many conferences or meetings in all, starting in October, 1958, up until the indictment was returned in this case, which was October the 24th, 1961, how many

conferences did you have with Assistant United States Attorney Generals?

[fol. 482] A. (Short pause.)

The Court: Your best recollection will be sufficient.

A. Yes. I clearly recall two, excluding the brief meetings I had with Government Attorneys during the Grand Jury proceedings here in the city.

Q. (By Mr. Haggerty, continuing): We will exclude them. You have a recollection, then, a distinct recollection of two meetings?

A. Yes.

Q. One was held in Washington?

A. Yes.

Q. Was—one was held where, the second.

A. In Los Angeles.

Q. And with whom did you have that conversation?

A. A Mr. Hollander.

Q. Now, did you ever have a conversation prior to the Grand Jury proceedings with either of these gentlemen here, representing the Government?

A. No.

Q. You are positive of that?

A. My present recollection is no.

Q. Your best recollection of that is no?

A. Yes.

Q. Now, you furnished an affidavit to the Department [fol. 483] on the 17th of April, 1959; did you not?

A. Yes.

Mr. Haggerty: And will you mark this for identification, please, as a Defendants' Exhibit?

Mr. Lipson: Mr. Haggerty, with your permission, may we stipulate a copy, a photographic copy of—may be made of that and the original returned to the Department file?

Mr. Haggerty: Yes, yes. I will so stipulate.

(Thereupon a document was marked for identification as Defendants' Exhibit B by the Reporter.)

Q. (By Mr. Haggerty, continuing): I will hand you what has been marked for identification as Defendants' Exhibit B, which purports to be an affidavit signed by you on the

17th day of April, 1959, and ask you: Does that bear your signature?

A. Yes, it does.

Q. Would you like to refresh your recollection from that affidavit?

A. I would, yes. Thank you. (Short pause.) My memory is so refreshed.

Q. Have you refreshed your recollection?

A. Yes.

[fol. 484] Q. Having refreshed your recollection from the affidavit, bearing date of the 17th of April, 1959, does it further refresh your recollection whether you made this affidavit voluntarily or you were requested to do so by the Government?

A. I made the affidavit voluntarily.

Q. And attached as part of the exhibit is a letter by William N. Pavitt, Jr., addressed to an Assistant Attorney General in the Anti-Trust Division. You authorized Mr. Pavitt to send that to the Anti-Trust Division; did you?

A. Yes.

Q. Now, again, a second affidavit is dated the 26th day of March, 1960. Would you like to refresh your recollection as to that affidavit?

A. Yes.

Mr. Haggerty: Will you mark that for identification, please?

(Thereupon a document was marked for identification as Defendant's Exhibit C by the Reporter.)

Q. (By Mr. Haggerty, continuing): I hand you, marked for identification, Defendant's Exhibit C, and ask you to examine it for the purpose of refreshing your recollection.

A. (Witness complies.)

Q. Have you refreshed your recollection, sir?

A. I have, yes, um-hmm.

[fol. 485] Q. Now, in reference to that affidavit, were you asked to furnish it by any representative of the Government, or did you voluntarily send it to the Government?

A. It was voluntary.

Q. You made a further affidavit on the 9th day of August, 1960; did you not?

A. I am not certain.

Mr. Haggerty: Will you mark this for identification as a Defendants' Exhibit, please?

(Thereupon a document was marked for identification as Defendants' Exhibit D by the Reporter.)

The Court: August the 9th, 1960?
Mr. Haggerty: Yes, your Honor.

Q. (By Mr. Haggerty, continuing): I hand you, marked for identification, the Defendants' Exhibit D, and ask you to examine it to refresh your recollection.
A. (Witness complies.) Yes.
Q. You have refreshed your recollection?
A. Yes.
Q. Can you state now whether you voluntarily sent this to the Government or they requested it?
A. It was sent voluntarily.
Q. Would it be a fair statement to make that the time that you sent these three affidavits voluntarily, you had an in-
[fol. 486] terest in the original complaint that you had made to the Department of Justice, Anti-Trust Division?
A. Yes.
Q. It was your purpose to have them investigated; right?
A. Yes.
Q. If there was any possible action they could pursue, you were interested to see that they did that?
A. Yes.
Q. Further, if there would be a presentation to a Grand Jury, you were interested in that?
A. Yes.
Q. And if an indictment was returned against these two corporations and these two individual defendants, you were also interested in seeing that that was done?
A. Yes.
Q. Yes. Do you say—I will strike that.
At the present time, then, would it be a further fair statement to say that you are a witness with an interest in the outcome of this present case?
A. Yes.
Q. And your interest is, if possible, to see all of these defendants convicted; isn't that true?
A. No.

Q. No. Isn't it within your line of interest that they should be convicted?

[fol. 487] A. Yes.

Q. Now, you have cooperated in every way that you have known how with the Government?

A. Yes.

Q. You have not only complied with their requests, but you have voluntarily given information?

A. Yes.

Q. And you have not only appeared as a witness, Mr. Looker; you have done considerable reading to take the load off of the vocal cords of my brother; isn't that true?

A. Apparently.

Q. Yes. Now, Mr. Looker, did I understand you correctly as to when you started your connection with the Huck Manufacturing Company?

A. I don't know what you understood.

Q. I understood it was in 1947. Am I right?

A. That is correct.

Q. All right. Now, you worked up to a position of a Sales Manager; did you not?

A. Yes.

Q. And what year did you become Sales Manager?

A. 1954.

Q. And you remained Sales Manager; did you have a title in addition to Sales Manager in '54?

A. May I correct my last answer?

[fol. 488] Q. You may correct it.

A. The year was 1952 when I became Sales Manager.

Q. You became Sales Manager, but you were under an immediate superior, the Vice President in Charge of Sales?

A. Correct.

Q. And that was whom?

A. A Mr. Frank A. Dobbe.

Q. And you worked under Mr. Dobbe until his retirement?

A. Correct.

Q. And you became a Vice President in Charge of Sales in 1956?

A. Correct.

Q. And when in 1956?

A. Excuse me. May I correct my answer? In 1954.

Q. In 1954. Now, as Vice President in Charge of Sales, were you on the Board of Directors of the corporation?

A. No.

Q. And you were in complete charge of sales; were you not?

A. Yes.

Q. You had the supervision of the men out in the field actually doing the selling work?

A. Yes.

Q. You had supervision of your own staff, clerical, in your department?

A. Yes.

Q. And to whom were you responsible for results?

[fol. 489] A. Directly to Mr. Alfred E. Benkert.

Q. Who was the Executive Vice President?

A. Correct.

Q. Now, going back to 1951, what was your status in employment with Huck?

A. As far as I can recall, I had the title of Manager of Technical Publications.

Q. And it was in 1951 as Manager of Technical Publications, that you flew with Mr. Huck to Pennsylvania to visit the factory of Townsend; is that true?

A. Yes.

Q. Now, you have stated the persons that you recall were there in 1951 and on the Huck side of the picture, you have placed yourself and Mr. Huck, who was then alive, and who else?

A. That is all I recall of having been on that trip.

Q. I will ask you: Does it refresh your recollection if I stated that Mr. Sterritt was there, and that Mr. Armour was there?

A. It doesn't reflesh—refresh my recollection. I believe you, but is doesn't refresh my own recollection.

Q. You wouldn't deny that they were there?

A. No.

Q. Now, as representing Townsend, Mr. Dickenson was there?

A. Yes.

Q. And who else? Mr. Horst?

[fol. 490] A. Well, I don't recall who else was there.

Q. Was there a lawyer representing Mr. Dickenson there? A. I don't recall.

Q. Do you recall anyone representing Townsend other than Mr. Dickenson?

A. I recall a meeting where there were several people present, but I don't recall who they were other than those previously testified to.

Q. I see. Now, was there any discussion in your presence and hearing in reference to a license to be granted for the manfacture, use and sale of the lockbolt from Huck to Townsend at that time?

A. Yes.

Q. Now, will you indicate who raised the subject of a license at Pennsylvania?

A. I don't recall.

Q. And there was a request from Townsend to the representative of Huck for a license; is that correct?

A. I don't recall who made the request.

Q. You don't recall.

The Court: This would be a good time to take a recess.

Mr. Haggerty: Very well, your Honor.

(Thereupon a recess was taken.)

[fol. 491] (By Mr. Haggerty, continuing): Mr. Looker, if I stated that Mr. Dobbe was at the meeting at New Brighton, Pennsylvania in 1951, would you deny it?

A. No.

Q. You have no recollection, however, of his being there; is that correct?

A. Yes.

The Court: Yes, you have no recollection; is that it?

A. That is correct, yes.

Mr. Haggerty: Sounds like a quiz program.

(Laughter.)

Q. (By Mr. Haggerty, continuing): Now, Mr. Looker, as a result of that meeting, Mr. Huck made the decision that no license was to be granted to Townsend to manufacture, use and sell lockbolts; is that correct?

A. Yes.

Q. And Mr. Huck made that decision, himself?

A. Yes.

Q. Now, continuing on, Huck and Townsend became involved in a lawsuit; right?

A. Yes.

Q. It was Huck's contention that Townsend had infringed their patents by Townsend manufacturing a lockbolt?

A. Yes.

[fol. 492] Q. And as a result of that, the suit was instituted by Huck against Townsend in the United States District Court at Pittsburgh, Pennsylvania?

A. Yes.

Q. And the cause was transferred by that District Court to the United States District Court at Los Angeles, California?

A. Yes.

Q. And a trial was had?

A. Yes.

Q. It was a full dress trial; was it not?

A. Took a long time.

Q. Yes. And Huck was represented by its counsel?

A. Yes.

Q. And as a matter of fact, it was Mr. Dickey that represented Huck; isn't that true?

A. He was one that tried the case.

Q. Yes. Well, that is usually the fellow that represents them.

A. I believe that the representation was made by Lyon & Lyon, a California attorney. Mr. Dickey was the one that was introduced to the Court and tried the case. however.

Q. Yes. And Townsend was represented by counsel?

A. Yes.

Q. And you were present during the course of that trial?

A. Yes.

Q. And you appeared as a witness in behalf of Huck; did you?

[fol. 493] A. Yes.

Q. And as you say, the case took considerable time?

A. Yes.

Q. And based upon your observation, it was thoroughly tried; was it not?

A. Yes.

Q. And as a result of that trial, the United States District Judge found that Townsend, in the manufacture of its lockbolt, had infringed the patents of Huck; isn't that true?

A. Yes.

Q. Then, following that, an appeal was taken through the Court of Appeals from the decision and judgment of the Trial Court, the District Court; isn't that true?

A. Yes.

Q. And that appeal was awaiting argument and decision in the year 1954?

A. Yes.

Q. And it was in 1954 that you became a Vice President in Charge of Sales?

A. Yes.

Q. Now, in the month of May, 1954, specifically, I believe on the 4th day of May, there was a meeting of the committee of the Huck Manufacturing Company, considering—to consider whether or not to license Townsend; isn't that true?

A. I don't have independent recollection of the date. [fol. 494] The documents in evidence by the Government indicate that meeting was held on the 5th, I believe.

Q. May the 5th, all right, sir. Now, prior to that meeting, did you make any notes of recommendation, anything in writing as to recommendations as to whether or not to issue a license by Huck to Townsend?

A. No.

Q. Following the meeting, however, you made a resume, did you not, for the pros and cons and made a statement to that effect; did you not?

A. I believe not.

Q. You believe not. Would you state positively you did not?

A. I do not speak from independent recollection, but I believe that the Government's Exhibits do indicate that the memorandum made by myself discussing the pros and cons of issuing a patent license and the pros and cons of issuing a patent license to the Townsend Company were made prior to the meeting of May 5.

Q. Well, then, at the time that the meeting of May 5 was held, did the company or the committee have the

advantage of your pros and cons that you had drawn up in reference to a license?

A. Yes.

Q. And in reference to a license of Townsend?

A. Yes.

[fol. 495] Q. So, your recollection is, then, that prior to the meeting you had reduced to writing, at least, your opinion and your recommendation as to whether or not to issue a license from Huck to Townsend?

A. No.

Q. What were these papers that you drew up, if they were not recommendations?

A. They were—I believe the papers speak for themselves——

Q. (Interposing): I am asking you——

A. (Continuing: —but I can give you my opinion.

Q. (Continuing: —what your intent was?

A. The intent was to show those concerned with making such a decision what some of the factors involved were, both for issuing a license and against issuing a license, and for issuing a license to the Townsend Company and against issuing such a license.

Q. That was your analysis of the problem that you submitted?

A. Yes.

Q. And the company had the bene- —the committee had the privilege of having that before them when they discussed on this meeting of May 5th the possibility of licensing Townsend; isn't that true?

A. Yes.

Q. Now, following that meeting on May the 5th, 1954, when did you next attend a meeting with the Huck people [fol. 496] in reference to issuing a license to Townsend?

A. I don't have independent recollection.

Q. I will ask you: Have you a recollection of whether or not subsequent, or after May the 5th, 1954, there was a meeting which you attended of the Huck officers or committee in reference to licensing Townsend?

A. I am certain that there must have been such a meeting or many meetings. I don't recall just exactly when they were.

Q. Do you recall any specific meeting, as to the date of any specific meeting?

A. You are speaking of a meeting between myself and other Huck officers?

Q. Yes, sir.

A. Not including negotiation with the Townsend Company.

Q. No, sir.

A. I don't have independent recollection of such a meeting.

Q. Now, did you, subsequent to May the 5th, 1954, have contacts with Mr. John Sterritt, the patent lawyer, in reference to licensing to Townsend from Huck?

A. Although I don't recall specifically seeing Mr. Sterritt, I can testify that I did have such meetings. I don't recall any of them, but I am sure that I did.

Q. And was——

A. (Interrupting): Nor can I so testify.

Q. And was the purpose of those meetings to discuss the [fol. 496a] license to Townsend?

A. Yes.

[fol. 497] Q. Could you say how many meetings you had with Mr. Sterritt?

A. I cannot. I'm certain that there must have been many.

Q. Now, you have testified on direct examination that in the month of August, 1954, at the office of Harness, Dickey and Pierce, in the General Motors Building, there was a meeting between representatives of Huck and representatives of Townsend; is that correct?

A. The month of August was something I don't believe I did testify to.

Q. You don't believe you testified to it?

A. It—I—I don't believe I did, no.

Q. If you did testify, were you in error?

A. I don't say that I am in error. The month of August brings to mind no independent recollection.

Q. It brings your independent recollection?

A. It brings to mind no independent recollection.

Q. I see. Well, then, I don't quite understand your answer. It brings to your mind no independent recollection. How many kinds of independent recollections have you?

A. Just one.

Q. Just one. And it is of no recollection?

A. I don't understand your question. Would you rephrase the question?

Q. I'll ask you, you have said that your independent recollection is to the effect that there was no meeting in [fol. 498] August? Do I understand you correctly?

A. No, you do not.

Q. Was there a meeting in August?

A. I don't know if there was a meeting in August or not.

Q. What other month could it have been in—or months?

A. The meeting referred to could have been in the month of June, month of July, the month of August, or, even possibly, the month of September.

Q. Within those four months that you have enumerated.

Now, do you recall that on the 2nd day of June, 1954, there was a meeting by and between representatives of Townsend and representatives of Huck?

A. No, I do not.

Q. To refresh your recollection, do you recall that, representing Huck was Mr. Armour, Mr. Benkert, yourself, Mr. Sterritt, and Mr. Ketchum. I strike Mr. Ketchum. Mr. Dobbe?

A. I don't recall the month of June as—the point that I'm making, I recall a meeting held between the month of May and the month of September. I don't recall that it was in the month of June or on the 2nd of June.

Q. Well, now, you have added another month.

So we have May, June, July, August and September, a five-month span. I'll ask you specifically, isn't it true that on June the 2nd, 1954, there was a meeting in the office [fol. 499] of Harness, Dickey and Pierce, at which you were present, Mr. Armour, Mr. Dobbe, Mr. Benkert, and Mr. Sterritt, representing Huck, and Mr. Dickenson, Mr. Ketchum, and Mr. Johnson represented Townsend?

A. I don't know.

Q. Is it that you deny it or that you have no recollection of it?

A. I have no recollection of a meeting on the 2nd of June.

Q. Just a recollection of a meeting in the month of May, such as I have described between those persons?

A. No.

Q. It is your recollection that you only attended one meeting between the representatives of Townsend or of Huck, including yourself, with the representatives of Townsend in the office of Harness, Dickey and Pierce, within that five-month span, from May to September?

A. Yes.

Q. Would you state positively that no meeting did take place in June of 1954, such as I have described?

A. No.

Q. Now, a meeting was held, one meeting was held that you have recollection of; right?

A. Yes.

Q. A meeting was held, according to records on the 5th day of August, 1954. Have you any recollection of that [fol. 500] meeting, at which you were present?

A. I've no recollection of a meeting having been held on the 5th day of August, 1954.

Q. Now, after the meeting of August the 5th, 1954, which will be established by other witnesses as the date, and possibly documentary proof, you returned to your duties—or whenever this meeting was held in your mind, you returned to your duties as vice president in charge of sales for the Huck Manufacturing Company?

A. Are you referring to the meeting that I previously testified to in Mr. Harness' office?

Q. Yes, the one you testified to in some detail on direct examination at Harness, Dickey and Pierce's office?

A. Yes.

Q. Now, is it within your knowledge that, as the result of that meeting and as the result of subsequent negotiations between the parties, a contract was reduced to writing?

A. Yes.

Q. And you are familiar, are you not, with the terms of that contract?

A. Superficially.

Mr. Haggerty: May we have the contract, please?

Mr. Lipson: It's on the table.

Mr. Haggerty: It's on the table?

Mr. Lipson: Exhibit 17.

[fol. 501] Mr. Haggerty: That's the contract of September 14, 1954.

The Court: Exhibit 17.

Mr. Lipson: May I offer my assistance?

Mr. Haggerty: I would be happy to receive it.

Mr. Lipson: Here it is (indicating).

Q. (By Mr. Haggerty) I hand you the Government's Exhibit 17, and I ask you to refer to a clause in the agreement as to whether or not—after you have read it, will you tell us whether or not there is a clause that established that this contract is exclusive for a period of two years?

A. Yes.

Q. Now, will you read that clause, please, indicating what clause it is, and will you read it—what paragraph?

A. Page five, Paragraph 12, subparagraph (a).

(Reading):

> "Huck agrees that for the first two years of the present license, the license herein granted to Townsend shall be exclusive to Huck and Townsend for the lockbolt devices offered for sale by Huck, unless during that period of two years a national emergency shall require the production of lockbolt devices for United States Governmental use which cannot be satisfied by the combined facilities of Huck and Townsend; then [fol. 502] Huck may grant a license to another source in the event that it is requested so to do by a United States Government agency."

Q. Now, sir, you have stated that you have a practical knowledge of patents but you are not a patent lawyer, not formally trained; isn't that true?

A. I don't know that I made such a statement; no.

Q. Well, didn't you, after the death of Mr. Huck, represent the Huck Manufacturing Company in its dealings with its patent lawyers?

A. Yes.

Q. Yes. So, you have some knowledge of patents?

A. I have never claimed to be competent in that field.

Q. Have you sufficient knowledge, having read that clause, to state that for a period of two years after the date of the agreement that the license that was granted by Huck to Townsend was exclusive?

A. It was exclusive to both Huck and Townsend, with the stipulation of the Government that——

Q. (Interposing) As a practical matter, doesn't it convey to you that Huck during that period of two years could not license any other company or individual to manufacture, use and sell lockbolts that were covered by this agreement?

A. Except for the stipulation of the emergency..

[fol. 503] Q. Yes, the emergency, National emergency; isn't that true?

A. Yes.

Q. So, when you have talked about various companies, and the Government has used various exhibits where there have been requests for lockbolt licenses within that two year period, it was then beyond the power of Huck legally to license these applicants within the two year period; isn't that true?

A. Yes.

Q. Now, will you turn to that portion of the exhibit that you have in your hand and find out if there is a provision as to the maintenance of price for a period of two years?

A. Yes, there is such a provision.

Q. Will you read it, please, after indicating the paragraph number?

A. Paragraph—correction—page five, paragraph 12, subparagraph (b).

(Reading):

> "Townsend agrees during said two-year period to maintain at least Huck's prices on lockbolt devices manufactured and sold by Huck according to Huck's published current price schedules as changed from time to time and computed according to Huck's published Standard Pricing Policy, which will be furnished Townsend by Huck, except that Townsend's prices shall be computed F.O.B. Townsend, New Brighton, [fol. 504] Pennsylvania."

Q. Now, doesn't that paragraph convey to you for a period of two years that Townsend was bound legally not to sell lockbolts manufactured by them for a lesser price than Townsend set on those lockbolts?

Mr. Lipson: Your Honor, I object to the question. It's asking for a legal conclusion from a lay witness.

Mr. Haggerty: I don't think so. It's a practical question.

The Court: He may answer.

A. May I hear the question back?

(Whereupon, the last question was repeated by the Reporter.)

Q. (By Mr. Haggerty, continuing) What does it convey to you, then, as to this price?

You were the Sales Manager, were you not?

A. Yes.

Q. Vice president in charge of sales?

A. Yes, sir.

Q. That's a higher title, a higher echelon than sales manager.

Now, you have related to us that you received complaints from time to time from your sales force to the effect that Townsend was selling lockbolts cheaper than Huck; isn't that true?

A. Yes.

[fol. 505] Q. And when you received those complaints, you attempted to do something about it, didn't you?

A. Yes.

Q. Now, why did you attempt to do something about it?

A. Because of the agreement that I hold in my hand (indicating).

Q. Because you had a legal right to do something about it created by that agreement, did you not?

A. Yes.

Q. Yes. And what legal right did you have that you investigated and enforced?

A. We had the right to terminate the patent license here if the Townsend Company sold lockbolt devices for prices less than that charged by Huck during this stipulated two-year period.

Q. Yes. No disagreement about that?

A. No.

Q. No. And that right was created by the agreement itself; isn't that true?

A. Yes, it is.

Q. And I'm referring, when I say "disagreement", to the Government's Exhibit 17.

May I have from the Government the following exhibits? Government's Exhibits 24, 26, 27, 28 and 30?

Mr. Lipson: I believe all those exhibits are on the Clerk's table, Mr. Haggerty.

[fol. 506] Q. (By Mr Haggerty, continuing) Now, prior to the institution of the suit by Huck against Townsend for infringement of their patents on the lockbolt, there have been certain difficulty with Cherry over selling or attempting to sell their lockbolt to Huck customers; isn't that true?

A. We have considered them difficulties, yes.

Q. Yes. And isn't it a fact way back in September, '51, the Cherry Division of Townsend had sold or taken an order for certain lockbolts of their manufacture to Convair, a customer of Huck?

A. Well, I can't independently recall the date.

Q. Well, you remember the incident, do you not?

A. I do.

Q. Yes. I hand you the Government's Exhibit 24, and ask you if that refreshes your recollection as to the date?

A. The date shown is September 4th, through September 7th.

Q. All right, sir.

A. '51.

The Court: What year?

A. 1951.

Q. (By Mr. Haggerty, continuing) Yes. As a matter of fact, you were one of the persons that went to Convair to notify Convair that they were purchasing from Cherry Rivet Division of Townsend an article which Huck claimed was an infringement of their patent; isn't that right?

[fol. 507] A. Again there's a legal matter here. I'm not certain that there was infringement at that time claimed by Huck.

Q. Well, didn't you make some representation to Convair?

A. As best I recall, the representation made to Convair by Mr. Huck was that patents would issue which would cover these constructions.

Q. All right.

A. But they—I don't believe—I don't recall that they had issued at that time.

Q. All right, that patents would issue; the patent had been applied for and would issue——

A. (Interposing) I believe so.

Q. (Continuing)—is that right?

A. I believe so, yes.

Q. Yes. And, as the result of the representation that was made to the agent of Convair, they cancelled the Cherry Rivet contract; isn't that right?

A. I don't know all the reasons that they had when they did cancel such a contract. I'm aware of the fact that that contract was cancelled.

Q. Yes. And your visit to Convair was part of your duties, was it not, at Huck?

A. I think at the time it was a supernumerary duty.

Q. Now, you know, do you not, having knowledge of the manufacturing business, particularly manufacturing of [fol. 508] and article or articles under Letters Patent, there must be constant vigilance practiced by the holder of the patent who manufactures the article to see that there is no infringement of their patent by others who hold no license from them; isn't that true?

A. Yes.

Q. And what was practiced here was the vigilance that is required—in this instance with Convair and Cherry Rivet was the vigilance that is necessary to protect the patent once it's issued to you?

A. I assume that to be correct.

Q. Yes. Now, as of February, 1953, consideration was given by Huck to possibly licensing Townsend; isn't that true?

A. As of what date?

Q. In February of 1953?

A. (No response.)

Q. Well, to assist your recollection, I hand you the Government's Exhibit 26 (handing exhibit to witness).

A. The answer to the question is yes.

Q. Yes. And that's a copy of a letter that was written by you or an interdepartmental correspondence written by you?

A. Yes.

Q. And in that correspondence you state, in part, on February 3rd, 1953, (reading):

> "It is requested that the recipients of this memo-
> [fol. 509] randum give their thorough consideration to the latest proposal of the Townsend Company as expressed in Dickenson's letter of January 20. Although we have successfully weathered the threat of infringement and patent invalidity for the Lockbolt Townsend still holds over our head the threat of appeal."

Now, that was something that was discussed and was weighed by Huck, isn't that true, the threat of an appeal?

A. Yes.

Q. (Reading):

> "Probably more—" Huck had won in the lower court, hadn't he?

A. They had won, the patent infringement suit, yes.

Q. (Reading):

> "Probably more important than the threat of appeal is the threat of redevelopment so as to avoid our valid lockbolt patents."

Now, by that you meant there was the possibility that Townsend or some other manufacturer could develop a device that would serve the same purpose as the lockbolt but it would not invalidate the lockbolt patents; isn't that true?

A. I think the concern here was the probability, rather then the possibility.

Q. All right, the probability.

A. And the——

Q. (Interposing) As you will have it.

[fol. 510] A. And that the "invalidate" perhaps should be changed to infringe lockbolt patents. I'm not certain that I have this question correct.

May I hear it back, please?

Q. Would you like me to rephrase it? I shall.
A. I don't care.
Q. You state in your letter (reading):

"Probably more important than the threat of appeal is the threat of redevelopment so as to avoid our valid lockbolt patents."

Now, I'm inquiring of you, did you mean by that that there was, as you prefer it, a probability that some other manufacturer would come out on the market with a device that would serve the same purpose as lockbolts but not infringe the lockbolt patents?
A. The intent at the time of writing that memorandum was that the Townsend Company would do such.
Q. Specifically that the Townsend Company would do such?
A. Yes.
Q. And you have stated (reading, continuing):

"Stubbornness and refusal to accept the defeat have already shown themselves quite clearly as characteristics of the Townsend Company, and in the event that they lose they appeal to the Ninth Circuit Court——" [fol. 511] The word is "they appeal". It should be "their appeal".

It's probably in the transcription.
A. Perhaps in dictation, too.
Q. I'm giving you the benefit.
A. Thank you.

The Court: Always blame it on your secretary.
Mr. Haggerty: How, your Honor?
The Court: Always blame it on your secretary.

Q. (By Mr. Haggerty, continuing reading):

"——their next course of action would logically be development of a Lockbolt type fastener which would avoid our patents and perhaps obsolete the lockbolts which we have developed."

You seem to have had an opinion that Townsend, that the Townsend outfit was stubborn, refused to accept defeat and were tenacious; is that true?

A. Yes.

Q. Now, I hand you the Government's Exhibit 27 (handing exhibit to witness). I think all that was received in evidence. Correct me if I am wrong.

Mr. Lipson: I shall.

Mr. Haggerty: It was the first three pages and fourth page, am I right?

Mr. Lipson: And the signature page to the letter, of [fol. 512] which the fourth page——

Mr. Haggerty: (Interposing) All right, and the signature page.

Q. (By Mr. Haggerty, continuing) I'm referring to Government's Exhibit 27, and I will ask you if this is what you prepared to be given the committee that met on May 5th, 1954, to consider a patent license to Townsend?

A. Yes, it is.

Q. Yes. Now, for the first time there appears in writing, which was prepared by you (reading):

> "Should a Huckbolt license and second source for Huckbolts be established at this time?"

And you put down in your analysis (reading):

> "*Factors For:*
>
> "1. With a second source, labor negotiations would be facilitated."

What did you mean by that?

A. As best I can recall, the intent of that sentence was based on my understanding that the company had from time to time a great deal of difficulty negotiating their labor union contracts; further based on the understanding that the union and the local union—whom we dealt with, was very tough and that they were difficult to negotiate with and that they constantly held during these times over the head of the company the threat of strike.

[fol. 513] The existence of a second source for fabrication of lockbolts at the time appeared to me to be a deterrent to the strong position which the unions held in that did such a strike occur, the customers of the company would have someplace else to go and therefore the company might

stand the chance of losing those customers, while with a single source, the customers had no other place to go, and the union's position, therefore, under those circumstances was very strong.

In a highly competitive market, my opinion at that time, as I recall, was that unions do not have such a strong position in negotiating because of the threat of loss of business of the company and employment in their ranks.

Q. Well, you wouldn't deprive the union of the one weapon it had—namely, to strike, would you?

A. No.

Q. Now, as reason number two (reading):

> "It is felt that more than one source is required in order to develop a greater over-all market for the Huckbolt fastener i.e."

—id est—

> "two sources can sell more than twice as much as one source."

Was that your opinion?

[fol. 514] A. Yes, it was.

Q. (Reading):

> "3. Royalty income should be of appreciable benefit without capital expenditure of this company."

I don't think anyone could argue with you on your logic in that.

(Reading):

> "4. Secondary sources may hasten the development and expansion of driving tool production and help lessen our greatest sales drawback, that is, rivet driving tools."

Now, as the fourth one, I take it that driving tools had not kept abreast of the development and use of the lockbolt; is that true?

A. Yes.

Q. So there will be no question, while you use the word

"Huckbolt," you are referring—lockbolt and Huckbolt are interchangeable terms?

A. Yes.

Q. Now, you say as factors against (reading):

"With patent infringement appeal not yet heard, there is a chance that any know-how information which we might transmit at this time could be used [fol. 515] against us if the lower Court's decision on patent validity and/or infringement were reversed.

"2. The licensee's first customers would probably be our customers and we would suffer a dip in business until such time as the licensee could establish customers of their own which we could draw upon.

"3. Unless there was some price restrictions keeping the licensee from selling appreciably below our published prices, we could suffer badly in competition because of our high labor rates, etcetera."

In other words, if you would issue a license, it's a possibility that the licensee could manufacture cheaper than Huck, first of all, because of a lower labor rate in some parts of the United States than in Detroit; is that right?

A. Yes.

Q. (Reading):

"Poor Huckbolt manufacture could cause some trouble in the field and hurt the Huckbolt's reputation from an over-all standpoint."

In other words, Huck was concerned with them adhering to the quality of its product; isn't that true?

A. Yes.

[fol. 516] Q. And if a licensee should poorly manufacture Huckbolts or lockbolts and that became known in the field, it could hurt the general reputation of the product?

A. Yes.

Q. And inure to the detriment of Huck?

A. Yes.

Q. Now, as a matter of fact, on the quality of lockbolts, airplanes or—used for airframe lockbolts have to be carefully made, isn't that true, the close tolerances?

A. They all do.

Q. Yes, but particularly airframe?

A. Your—is your question relating to the difference in tolerances between air—airplane and non airplane lockbolts or the difficulty in manufacture? I don't understand the question.

Q. I'll answer your question by asking you one.

Aren't there minimum requirements demanded of a manufacturer of such a device as lockbolts before it can be accepted by the United States Government, for instance? Isn't there a national association of standards that sets standards?

A. There's such an association that sets standards, yes. That is not a Government agency.

Q. No, that's created by the manufacturers themselves?

A. Airframe manufacturers, generally, yes.

[fol. 517] Q. Yes. And they have set minimum standards; isn't that true?

A. Are you asking about lockbolts?

Q. Yes.

A. They have, yes.

Q. Yes. And if they do not meet those standards, they're rejected; the lockbolts do not meet the minimum standards, they are rejected?

A. If they're sold under those standards, yes.

Q. If they're sold under those standards?

A. Yes.

Q. Yes.

A. They're rejectable.

Q. Now, lockbolts that are made for airframes are rather expensive to make?

A. Is your question related to comparison of——

Q. (Interposing) My question would be by comparison with lockbolts that are made for commercial purposes.

A. Rather expensive—rather—more expensive?

Q. Yes.

A. To some extent, yes.

Q. The alloy of the steel that is used is far more expensive than the steel that is used in commercial lockbolts; isn't that true?

A. There's a difference in price. I don't know the exact difference in price.

[fol. 518] Q. Now, going on, you say (reading):

"What should be the requirements of our potential Huckbolt licensee?

"1. A manufacturer equipped to produce Huckbolt pins and collars complete in diameters through ½" at least.

"2. A fastener manufacturer who has the reputation and skill in producing fasteners in volume production to close tolerances."

In other words, this work, the manufacture of lockbolts required close tolerances, did it not?

A. Yes, it does.

Q. (Reading):

"A fastener manufacturer—" What do you mean by close tolerances? I'm a layman, not an engineer or a patent lawyer and most of the members of the Jury are in the same position. Some may have scientific knowledge. What do you mean by close tolerances?

A. An engineering drawing specifies a certain dimension and it also specifies the acceptable deviations from that dimension. The deviations from the established dimensions are called tolerances. If the deviations permit only slight variance, they're considered to be close.

Q. Thank you for the definition.

(Reading):

"A fastener manufacturer having a sales organization operating preferably in industries and locations [fol. 519] where our coverage is not great."

Now, what did you mean by that?

A. Our sales organization at the time of this memoranda was written covered certain industries rather completely. It did not cover other industries well at all.

Q. (Reading):

"A fastener manufacturer who utilizes ethical sales and business practices by practice and reputation."

Now, I presume an explanation of that would be that you wanted a fastener manufacturer of good, ethical business standard reputation?

A. Yes.

Q. In the manufacture, in the sale of the product; is that correct?

A. Yes, it is.

Q. Yes. Now, you cover (reading):

"Should the Townsend Company be considered for a Huckbolt license at this time?

"Factors For:

"1. Townsend already has considerable capital invested in the Huckbolt and it is possible that they will try, through redevelopment, to avoid patents which have been issued. We have been a thorn in their side [fol. 520] and will continue to be so until they have the Huckbolt on the market.

"2. Townsend has the threat of appeal held over our head and the possibility that our patents will, in the future, be declared invalid and/or not infringed by the present Townsend construction.

"Factors Against:

"1. If Townsend is licensed, the Huckbolt will probably be a product of the Cherry Rivet Division and their sales strength is in exactly the same area where our sales strength lies. Consequently, they will tend to merely take part of our business rather than establish their own.

"We tend to quarrel with the Townsend Company and our old wounds and their old wounds have not healed. Such an atmosphere would not be healthy in these negotiations or practical considerations after the negotiations:

"3. We have doubt as to Townsend's ability to manufacture the Huckbolt properly."

What did you mean by that?

A. We still—perhaps I still considered the Townsend

Company a manufacturer of barnyard fastener devices, so to speak.

Q. What do you mean by "barnyard fastener devices"?

[fol. 521] A. This is a term that Mr. Huck used to use before his death to describe——

Q. (Interposing) How do you interpret barnyard? Does it have to do with latches on barndoors and pig sties and—or what?

A. It was a term that he used to describe the conventional rivets manufacturer's operation.

Q. And that it what you meant?

A. That is correct.

Q. You don't mean that Townsend was confined to making locks to keep a bull in a pen or chickens from flying around or anything of that kind; you meant that their work was not as fine a tolerance and quality as was required to manufacture lockbolts? It that what you meant?

A. Yes.

Q. I see. (Reading):

> "We have doubt as to Townsend's ability to effectively sell a specialized fastener like the Huckbolt as Townsend's sales are geared to conventional barnyard fasteners while the Cherry Sales organization is almost totally integrated within Townsend with the exception of their West Coast aircraft sales which make up a very great portion of our Huckbolt business, as you know."

[fol. 522] Now, that is the analysis that you gave to the committee prior to the May 5th meeting, right?

A. Yes.

Q. And I presume that those points, factors for and factors against, were considered and discussed by the committee?

A. I also so assume that. I don't recall it independently each of those factors having been discussed.

Q. Didn't you naturally advocate what you had thought and put in writing? Didn't you do considerable talking at that meeting of May 5th?

A. I don't specifically recall. I would have, probably.

[fol. 523] Cross-examination. (Continued)

By Mr. Haggerty:

Q. I hand you Government's Exhibit 30, and ask you to read it to refresh your recollection.

You have read it?

A. Yes, I have.

Q. Now, in this letter or departmental correspondence from yourself to Mr. Armour, Mr. Benkert, Mr. Sterritt and File, File is not a person, you mean by that a file of the Huck Company, isn't that true?

[fol. 524] A. Yes.

Q. (Reading):

"As you know, I met with John Sterritt Tuesday last——"

This is dated June 23, 1954——

"To discuss the Townsend and Illinois Tool agreements. John's final draft of June 22nd on the Townsend agreement appears to be the final draft and he will be ready to send same along to Johnson just as soon as he gets concurrence from us.

"I have read the agreement over and it appears to be very good and most favorable for both Townsend and Huck. If we may have your concurrence, we would like to proceed."

Now, does that refresh your recollection that inasmuch as you recite that John Sterritt had made a final draft on June 22nd, that there had been a meeting between the representatives of Townsend and the representatives of Huck prior to June 22nd in order to enable John Sterritt to draft a proposed agreement?

A. It does not serve to give my memory that degree of reflection, no.

The Court: You mean as to date, or what do you mean?

A. The data.

[fol. 525] The Court: The exact dates, is that what you are referring to?

A. Yes. Yes, I am.

The Court: Do you remember that there were meetings?

A. There were meetings, yes, with Mr. Sterritt and myself.

The Court: All right.

Q. (By Mr. Haggerty) There were meetings between the representatives of Huck at which you were present, prior to June 22nd, in the year 1954?

A. I don't know.

Q. You have no recollection?

A. I don't know. I don't have the recollection of the date.

Q. Isn't it a fact that John Sterritt could not have drawn a final draft without obtaining the opinions of both sides, that is, Townsend and of Huck?

A. Well, that which might have been considered a final draft at that date may not have been the final draft. I don't know.

Q. I appreciate that. But, what you call a final draft, the complete agreement, doesn't it occur to you that there must have been a meeting between the representatives of Huck and the representatives of Townsend before June 22nd, 1954?

A. That would be a conclusion of mine, yes.

Q. But you have no recollection, sir, of that meeting?

[fol. 526] A. I have no recollection of the date of the meeting I previously testified to.

Q. Now, we have gone over some length what you entitle factors relating to the establishment of a second source of Huckbolt manufacture by license agreement before the noon hour.

Now I hand you the Government Exhibit's 28 and ask you to refresh your recollection.

You have refreshed your recollection, sir?

A. I have, yes.

Q. All right. Now, the Government's Exhibit 28 is dated May the 5th, 1954. That is the date that you dictated this agreement, or that you dictated this notation as contained on Government's Exhibits 28?

A. That would be my normal practice, yes.

Q. Yes. Then you dictated it the same day that the committee of Huck had the discussion on whether or not to grant a lockbolt license?

A. Yes.

Q. Now, as a result of that, you addressed to Mr. Armour, Mr. Benkert, Mr. Dobbe, Mr. Brilmyer, Mr. Orloff, Mr. Stern, Mr. Sterritt, Mr. Reynolds and a file copy.

This departmental correspondence, as evidenced in the Government's Exhibit 28?

A. Yes.

Q. And this is what you have to say:

[fol. 527] (Reading):

"The following is a quick resume of points relating to future discussion for a lockbolt license.

"We should offer——

"We should proceed——

"1. We should proceed with issuing a lockbolt license.

"2. We should offer a lockbolt license to Townsend under the following general conditions:

"A. That Townsend agree to manufacture and make available to industry lockbolts 5/16" in diameter through at least 5/8.

Then there is in red pencil—was that red pencil—did you make that correction?

A. No.

Q. You did not. You don't know who did make it?

A. Yes.

Q. Who did make it?

A. Mr. Armour.

Q. Mr. Armour. All right, sir.

And on the notation it says:

"½——

The next word I can't make out——

"½ research on 5/8 to be done later.

"That lockbolts be manufactured and distributed by [fol. 528] Townsend—not Cherry."

In other words, they would be distributed under the Townsend name, not the Cherry Rivet name, is that true?

A. Yes.

Q. (Reading):

"That lockbolts and collars be suitably identified to prevent field mixing."

And what do you mean by that?

A. So that if there was any difficulty with the installation of lockbolts in the field, or difficulty with the installed product after it had been installed, that the manufacturer could be suitably identified so that we wouldn't get the blame for any difficulties that may have originated by virtue of the Townsend manufacturer.

Q. Well, then on each and every lockbolt, then, there would be placed some identifying inscription?

A. That was the intent, yes.

Q. One of Huck and one for Townsend?

A. As long as the two could be kept apart, it could only be on one.

Q. Only on one?

A. It could be. I don't know how it was worked out.

Q. But, at least, the manufacturer or the eventual consumer in the use of them, should be able to tell whose lockbolt they were handling, is that the idea?

A. Yes.

[fol. 529] Q. (Reading):

"That the license be cancellable if Townsend inferior quality hurts Huck."

In other words, according to this notation, there was still doubt lingering in the mind of the Huck people and of yourself, or at least some of the Huck people, as to the ability of Townsend to provide the proper quality of lockbolts, is that true?

A. Yes.

Q. (Reading):

"That Huck give Townsend manufacturing drawings and specifications for lockbolts and collars.

"The license to be non-exclusive."

In other words, any license granted by Huck to Townsend would be a non-exclusive license?

A. Yes.

Q. As to royalties, (Reading):

"Commercial business—7½%. Aircraft—5%.

"That we should determine Townsend's machinery and equipment not available for lockbolt manufacture on through ⅝" in diameter.

"Points not fully discussed.

"Should Townsend sell lockbolts or Huckbolts."

As you originally wrote it.

[fol. 530] (Reading):

"Price maintenance provisions."

Now what did you mean by price maintenance provisions?

A. I believe the intent there was to put some provision in the subsequent license agreement such that the Townsend Company would not be permitted to sell lockbolts at prices lower than prices established for comparable parts by Huck.

Q. I see. (Reading):

"Minimum royalties."

That is, that they were to pay a royalty in dollars—a certain amount of dollars, they would have to pay that X amount of dollars in minimum royalties if they sell that many lockbolts or not, is that true?

A. Yes.

Q. (Reading):

"Improvements.

"Termination.

"Favored license clause."

What do you mean by a favored license clause?

A. I think I meant rather than favored license clause, favored nations clause.

Q. Well, I presume they can be used interchangeably,

but what do you mean by either favored license clause or favored nations clause?

A. Such that—my intent there, I believe at the time, was that in the favored nations clause, that if we licensed another company at a more favorable royalty rate, we would also give that privilege to the Townsend Company. [fol. 531] Mr. Haggerty: I have to sort through this pile of stuff occasionally, your Honor.

My brother was so meticulous in having its arranged properly, that I don't want to disturb the sequence.

Q. (By Mr. Haggerty) I hand you Government's Exhibits 34 and 34-A. They have both been introduced into evidence and they are identical, with the exception that one has the stationery of the Huck Manufacturing and has the fact that Mr. Armour's name is encircled in red, and it has a stamp date on it, April 24, '56. They are duplicates, perhaps you better read, for convenience, Exhibit 34-A.

Refresh your recollection?

A. Yes.

Q. Now, as to the contents of this letter, which is dated April 20th, 1956, which would be in the period—the two-year period as to price maintenance from the agreement of September 14, 1956—or 1954, the two years would expire in September, September 14, 1956.

Now, this letter is dated April 20th, '56, and it is a letter to Mr. Paul Horst, (spelling) H-o-r-s-t, Assistant to the President, the Townsend Company, New Brighton, Pennsylvania.

(Reading):

> "I wish to thank you for the many courtesies extended during our very pleasant visit to New Brighton [fol. 532] earlier this week. Your hospitality was certainly appreciated and we certainly appreciate the opportunity also of working with your organization more socially in some of our common problems.
>
> "There is one point just brought to my attention concerning the pricing of our aircraft Huckbolts which I think you might wish to look into. When we offer the aircraft Huckbolt for sale to the Navy Department, Bureau of Aeronautics, central purchas-

ing in Philadelphia, we have a packaging charge to package the parts in accordance with Government specifications. This is overseas type packing and is fairly detailed. You may have been or may be asked to do the same and our prices are 60¢ per box for the 3/16", 80¢ per box for the 1/4", $1.00 per box for the 5/16", and $1.20 per box for the 3/8".

"For example, if they want the 1/4" aircraft Huckbolt, 100 pieces per box, we charge $8.00 per thousand extra; and if they want 25 pieces per box, we charge $32.00 per thousand extra.

"Again many thanks for your hospitality.

[fol. 533] And it is signed, "Huck Manufacturing Company.

By yourself, Vice President in charge of Sales.

Now, this letter was written for the purpose of having Townsend comply with the provisions of the written contract of September 14th, 1954, isn't that true?

A. That is correct.

Q. Yes. And you had a perfect legal right predicated on the contract so to do, did you not?

A. As far as I know, yes.

Q. Yes. Now again the Government has introduced into evidence Plaintiff's Exhibit 35, and attached thereto is a price list, but just referring to the yellow sheet of that exhibit, would you refresh your recollection?

This letter is dated May the 9th, 1956. It is within the two year period as to price maintenance, is it not?

A. Yes.

Q. And without going through, reading this letter, it refers to prices,

> "We would like to ask that the prices be adhered to in accordance with our existing agreement."

The agreement that you were referring to was the written agreement of September 14th, 1954, isn't that true?

A. Yes.

[fol. 534] Q. I hand you the Government's Exhibit 36, which has to do with one Mr. Hardy Luke, purchasing agent at Marietta, Georgia, for Lockheed, and ask you to refresh your recollection.

It does refresh your recollection?

A. Yes, it does.

Q. Now, I will ask you is this reference to the occasion or occasions when Townsend shipped the Lockheed Marietta by air express, or air cargo, lockbolts in order to make the delivery?

A. I believe that that memoranda refers to packaging.

Q. Packaging of lockbolts.

And this letter, the Exhibit 36, is dated May 11, '56, it is from yourself—it is departmental correspondence—to Armour, Benkert, DeLoach, Albritton, Pelletier, Braund and file.

And you stated that you

(Reading):

> "contacted Paul Horst on the matter of packaging and he has indicated to me that he will make it clearly understood to the Cherry Rivet Division immediately that they are to offer packaging to aircraft companies just exactly the way we offer packaging as expressed in the copy of your teletype to Mr. Luke on the first page of the subject memorandum. He indicated that [fol. 535] it could be possible that some deviation from this expressed policy might have been made by the Cherry Rivet Division of Townsend in lieu of any better information but that the latest up-to-date information on packaging has been sent to Townsend and that we should hear no further from difficulties of this type."

Now, there was something to do with packaging, is that it, that Townsend was grouping or splitting, or what was the difficulty on the packaging that prompted you writing this correspondence?

A. I believe that Townsend was offering packaging more favorable condition to the Lockheed company than the Huck Company was doing.

Q. And would that effect the price, too, to the Lockheed people?

A. No.

Q. Well, what would be the advantage of it to Townsend?

A. The advantage of the matter to Townsend would be it would put them in a more favorable position as a supplier.

Q. And you took the matter up with Mr. Horst so to remove that advantage, is that right?

A. Yes.

Q. In other words, that Huck would be on a par with Townsend?

[fol. 536] A. Yes.

Q. And that was the purpose of your letter?

A. Yes.

Q. And you think you were acting within your legal rights in the scope of the agreement of September 14, 1954, in writing this?

A. I would have to refer to that agreement before I could answer that question.

Q. Yes?

A. May I refer to the agreement?

Q. You want to read the agreement?

A. One clause.

The Court: 17.

Mr. Haggerty: 17, your Honor.

You will appreciate, we haven't much room to maneuver here. Did I happen to return it to you?

Mr. Lipson: No, you didn't, but Mr. Haggerty may use our copy of 17 if he would like to.

Mr. Haggerty: All right. Let the record show I am using a photostatic copy of 17. I think you can read this, witness.

A. Thank you.

Q. (By Mr. Haggerty) Do you find any authority within the contract for you calling this matter to Townsend's attention?

A. No.

[fol. 537] Q. Would you say, then, that in that instance probably inadvertently you exceeded your authority?

A. I don't know if it were inadvertently or intentionally.

Q. Or did you just take a chance to put Townsend in its place?

A. The only motivation that I recall in that matter had to do with preserving our company's competitive position insofar as possible.

Q. I see. And you made the effort to see that Townsend observed the rule that you laid down and they complied with it, didn't they?

A. Yes.

Q. Now, the Government's Exhibit 38, a copy of a letter that you wrote, dated July 3, 1956, to

(Reading):

"Mr. Paul Horst, President
"Townsend Company
"New Brighton, Pennsylvania

"I understand from our Atlanta representative that your Cherry Division offers prepaid premium shipments when they are behind schedule which is a little stiff competition and gives them a competitive edge which we do not enjoy.

"I wondered if you would look into this in view of our price equalization agreement."

[fol. 538] Now this is July 3, 1956, within the two year period following September the 14th, 1954.

Now, I think you have explained that by a prepaid premium shipment you meant where the sender, in this case Townsend, would use the facilities of an airplane, a premium shipment, to ship their lockbolts when they were behind in schedule on delivery, is that right?

A. Yes.

Q. Huck did not do that?

A. Apparently not. I don't recall that specifically.

Q. Yes. And you were writing to Mr. Horst, calling this to his attention, and asked him if he would look into this in view "of our price equalization agreement," isn't that true?

A. Yes.

Q. In other words, by using a prepaid shipment, the purchaser was actually getting the lockbolts at a cheaper price than they could get from Huck?

A. Yes.

Q. Again July 3, 1956, seems to have been a busy day for you to correspond with Mr. Horst as evidenced by Government's Exhibit 40.

You wrote a letter to Mr. Horst and mentioned a Buffalo transaction where

(Reading):

"Our Buffalo representative reports that you have [fol. 539] permitted grouping of non-standard commercial Huckbolts (about grip 23 or 24) with short standard grips. This report comes from a Mr. Stutz, Shop Superintendent of Niagara Blower Company.

"We only permit grouping of the part numbers shown in the price list and we would like to ask that you do likewise."

Now this was in the two year period and you simply asked Mr. Horst—you told him that you would like him to follow the policy of Townsend, isn't that right?

A. No.

Q. You say, (reading):

"We only permit grouping of the part numbers shown in the price list and we would like to ask that you do likewise."

A. Yes.

Q. So, didn't you ask Mr. Horst to carry on this particular phase of the business the same as Huck did?

A. Yes. I believe your question referred to Townsend rather than Huck.

Q. I beg your pardon.

A. I was encouraging Mr. Horst to follow the policies of Huck at that time.

Mr. Haggerty: I am afraid, Mr. Lipson, after you [fol. 540] so carefully stacked these, that I am going to mess them up for you, but I think they can be reshuffled.

Mr. Lipson: That is part of the Government's burden in this case, I am afraid.

Mr. Haggerty: Well, let's not burden the Government too much.

Q. (By Mr. Haggerty) Now, as evidenced by Government's Exhibit 42, you wrote a letter to Mr. H. E. Chilcoat, Vice President and General Sales Manager of the Cherry Rivet Division, The Townsend Company in Santa Ana,

California, dated December 27, 1955, and this was in reference to the Standard Parts and Equipment Company stocking a supply of lockbolts and holding out an initially lower price to the customer than could be met by Huck, but upon delivery, the customer paid the same price because they had to pay the freight, isn't that the situation?

A. Yes, as I recall it.

Q. Yes. Now, you wrote this letter to Chilcoat following your visit to investigate this problem at the seat of the trouble which was Fort Worth, Texas, and then you visited Mr. Chilcoat in Santa Ana, did you?

A. I don't recall traveling to Fort Worth on the matter, was that your question?

Q. Yes. You did not go to Fort Worth?

A. I don't recall doing so.

[fol. 541] Q. You went directly to Santa Ana and conferred with Mr. Chilcoat directly?

A. I don't know that I traveled to Santa Ana for that purpose; when I was there, I did see Mr. Chilcoat, yes.

Q. All right. We will say that you were on the West Coast——

A. (Interposing) I think so, yes.

Q. (Continuing)—or visiting the West Coast and that was one of the things you did?

A. That is.

Q. That is, conferred with Mr. Chilcoat over the Standard Parts and Equipment Company situation?

A. Most accurate, yes.

Q. And you in this letter said Mr. Unfried's memorandum to me—and who is Mr. Unfried, is he a representative?

A. Yes.

Q. Is it pronounced Unfried or Unfreed?

A. It's pronounced "freed". We used to pronounce it "fried" however, common usage.

Q. Well, that's a hot place, Fort Worth.

(Reading):

> "Cherry is quoting a lower price for the lockbolts than Huck on all quotation. However, the freight point listed on both are F.O.B. each plant. The freight is more from California than it is from

Detroit, which makes the delivered price about the same, but the buyers can justify giving the orders to [fol. 542] Cherry, at a lower cost, accordingly to the quotation. This one point is being pressed by SP & E to all buyers, as a reason to give them the orders along with the local stock deliveries."

You asked him to look—for an early opportunity to look into the above mentioned situation,

(Reading):

"—as it appears to be serious to us, and one which should be corrected, if need be."

And again he extended courtesies and you thanked him.

Now, this letter is dated December 26, 1955, which is within the two year period from September 14, 1954, as to the price arrangement, isn't that true?

A. Yes.

Q. The maintenance of prices?

A. Yes.

Q. Now, let me ask you: There have been introduced in evidence exhibits and there has been some testimony from you as reference to a dispute that arose between Townsend and Huck in reference to the manner in which freight charges were to be made, isn't that true?

A. I don't classify that as a dispute, sir, I classify it as a negotiation.

Q. Well, I will ask you this: You resigned from Huck [fol. 543] on what date?

A. I don't recall the date.

Q. Was it in the month of July of the year 1956?

A. Yes.

Q. And following your resignation, you told us you stayed on for a period of four or six weeks to complete some work that you were engaged in?

A. Yes.

Q. Subsequent to your resignation?

A. Yes.

Q. Now, during the time that you were at Huck, do you know if this disagreement—we won't call it an argument—but this disagreement over how freight charges were to be

made was settled during your tenure as vice president in charge of sales.

Was that question ever settled?

A. The question isn't even clear to me. May I hear it back?

Q. All right. During your tenure as vice president in charge of sales, was the disagreement between Huck and Townsend ever settled in reference to how freight charges were to be made?

A. No.

Q. I hand you Government's Exhibit 48, to refresh your recollection.

The Court: What is this number?

[fol. 544] Mr. Haggerty: 48, your Honor.

Q. (By Mr. Haggerty) Having read it, does it refresh your recollection?

A. Yes.

Q. Now, this letter is dated October 15, 1954, one month and one day after the written agreement was excuted by and between Huck and Townsend, and this is departmental correspondence from you to A. W. Armour, copies to Benkert, Pelletier, Sterritt, and file.

(Reading):

"One major point was brought up during our marketing conference with Townsend October 14."

Now, you did have—subsequent to September 14, 1954, you did have a conference with Townsend which you participated in on October 14th, did you not?

A. Apparently.

Q. Yes. Have you forgotten that?

A. Yes.

Q. And who was present, does it refresh your recollection, having established the fact that there was a conference a month and a day after the agreement was executed as to who was present?

A. I recall specifically now one marketing meeting that was held at the Homestead in Virginia, is that the one that you are referring to?

[fol. 545] Q. All right. At the Homestead. I don't know, I wasn't there.

A. I don't either.

Q. I am asking you.

A. The meeting you are referring to is—I recall one marketing meeting, and that marketing meeting was held at the Homestead in Virginia.

Would you like me to tell about that meeting, who was there.

Q. I will ask—I will proceed from there. We have established there was a meeting. And you represented, did you not, Huck?

A. At the meeting that I am referring to?

Q. Yes.

A. Yes.

Q. And did anyone accompany you?

A. Yes.

Q. From Huck? Who?

A. Mr. George Q. Mathews.

Q. And what was his capacity with Huck at that time?

A. Sales manager.

Q. And was that all that represented Huck?

A. Yes.

Q. And, as a matter of fact, this meeting was actually a sales meeting, a sales promotion meeting of Townsend, wasn't it?

A. The meeting at the Homestead, yes, was.

[fol. 546] Q. And you were invited to that meeting?

A. Yes.

Q. And you spoke at that meeting?

A. Yes.

Q. You gave an oration?

A. Yes.

Q. Now, you stated in this letter, then, of October 15, 1954, (Reading):

> "During our discussion, the point was made that our license did not include the stump."

Now, what do you mean by "stump?" Lockbolt stump?

A. Yes.

Q. (Reading):

> "—and that if the stump were to be included, a separate license would have to be written based upon know-how."

Now, as a matter of fact, was there a patent on the lock-bolt stump?

A. No.

Q. No. In other words, as far as a patented article, Huck had nothing to license to Townsend or anyone else, did they?

A. No.

Q. All they did have——

A. (Interposing) Excuse me. Excuse me. Yes, they did not have anything to license.

Q. They did have, however,—they did have, however, [fol. 547] the know-how as to the ability to make them?

A. That is, Huck did.

Q. Yes.

A. Yes.

Q. And all they could do as far as that was concerned was to license Townsend and give Townsend their know-how?

A. Yes.

Q. Now, you say:

(Reading):

> "I would like to suggest that we proceed immediately with this license and I do believe that Townsend would be willing to have the second license included so that they could have a rounded line such as ours, making the same parts and insuring our complete cooperation for the entire line."

That is what you mentioned in this letter and that is what you desired, isn't it?

A. Yes.

Q. That Townsend would have a well rounded line such as Huck?

A. Yes.

Q. A complete line. Now, is it within your knowledge that this license was ever granted by Huck to Townsend, the know-how?

A. Yes.

Q. And is it within your knowledge that there was a [fol. 548] royalty or was not a royalty arrangement?

A. I would have to refresh my memory before I could answer that.

Q. But, you do know that there was a license?

A. Yes.

Q. As a matter of fact, to refresh your recollection, do you recall when you were acting as a "reader" for my friend, that you read part of that agreement yesterday?

A. I do, yes.

Q. Yes. But you don't remember whether or not there was a royalty?

A. I would have to read it over again.

Q. All right. Now, referring to the Government Exhibit 50, which is dated February the 15th, 1955, and this is from Mr. M. E. Welch (spelling) W-e-l-c-h, Jr., on departmental correspondence, and it is addressed to Armour, Benkert, Bernard, Looker, Mathews, Pelletier, Cianfarani, Serra, (spelling) S-e-r-r-a, Welch, Westrick, Higgins, Smoot, Van Hecke, Rowse, Vercellone, Dobbe, and file.

Now, this has to do with a price increase and the first sheet is from Mr. Welch to those persons whom I have just named.

And the second, I believe, is a specimen letter that you have drawn up to send to customers to announce a price increase, am I correct?

A. Yes, you are.

[fol. 549] Q. Now, in reference to price increases, did you have anything to do with price increases?

A. Yes.

Q. Was there a committee on price increases?

A. You are speaking of this two year period?

Q. I am speaking of the two year period, yes, sir.

A. Yes, there was.

Q. And who was on that committee?

A. Mr. Armour, Mr. Benkert, and Mr. Pelletier.

Q. Yes.

A. And I would assume that I was also a member of that, although I am not real certain.

Q. And will you kindly give Mr. Pelletier's capacity with the Huck?

A. He was in charge of cost accounting.

Q. And was it usually Mr. Pelletier's recommendations that were followed by the committee?

A. I am not certain.

Q. Well, if Mr. Pelletier demonstrated that certain articles—lockbolts were being manufactured by Huck at a loss and he made a recommendation to raise the price sufficiently so there would be no loss and a nominal profit, would the committee follow that recommendation?

A. As I recall it, the more usual practice was, having received a recommendation from Mr. Pelletier, that a great [fol. 550] deal of discussion usually ensued about how much the prices were going to be raised. My usual position was to keep the prices down to preserve our company's competitive position, and Mr. Pelletier's usual position was to increase them to show a more adequate profit.

The result was often somewhere in between. The result was sometimes according to Mr. Pelletier's requests, and the result was sometimes according to my own position.

Q. Well, you were the man in charge of sales, and it was your desire and wish to sell as many lockbolts as possible?

A. Yes.

Q. And you were cognizant of the fact that price had a lot to do with sales?

A. Yes.

Q. Where Mr. Pelletier was looking from a different angle than you were approaching it, is that true?

A. Yes.

Q. So somewhere between your two opinions the price was arrived at?

A. Yes.

Q. Now, in this letter that you—specimen letter that you got together, it went to all customers, did it not?

A. I would assume so.

Q. And it is re: AL—ALS price increase. Now, it seems to me that Huck is as bad as the Federal Government with [fol. 551] these letters of the alphabet.

What is "AL"?

A. Aircraft Lockbolt.

Q. What is "ALS"?

A. Aircraft Lockbolt Stump.

Q. Now, you wrote a very sweet letter announcing the raising in prices:

(Reading):

"Because of your patronage and generous use of our Huckbolt and Huckbolt Stumps during the past four years, we have been able to offset increased labor, material and operating expenses by increased production of the parts and consequent production efficiencies and economies."

Now, that is true, isn't it?

A. Yes.

Q. (Reading):

"We do find it necessary, however, at this time to increase the price of our Aircraft Huckbolt Pins and Aircraft Huckbolt Stumps nine per cent to cover cost increases not otherwise amortized during the past years."

Now, what were your cost increases; were labor costs increased?

A. Generally, yes.

Q. Was the cost of materials increased?

A. Yes.

[fol. 552] Q. And, in your opinion, was his a bona fide justified raise of nine per cent?

A. This is the Aircraft Lockbolt?

Q. Yes, sir.

A. And Lockbolt Stump?

Q. Yes, sir.

A. Yes.

Q. So what you have stated here was the truth?

A. As far as I know, or knew then, yes.

Q. Yes. And then you go on to say that price change will be placed.

(Reading):

"—into effect February 15, 1955, and a new printed price list will be sent to you under separate cover in the near future. Please note that the price for the Huckbolt Collars is unchanged.

"Thanking you for your many courtesies we remain,
"Huck Manufacturing Company, "Robert Looker,
"Vice President in Charge of Sales."

Now, this increase in price, according to your specimen letter, as of February 10th, and the notice, the Exhibit 50, is February 15, 1955; this price increase was made within two years subsequent to September 14th, 1954, isn't that [fol. 553] true?

A. Yes.

Q. Now, again Exhibit 51 is dated March 25, '55, and refers to different specimens or different types of articles made by Huck, and it is from Mr. Welch, to Armour, Benkert, and so forth, in reference to a price increase of other articles, and attached to it, dated March 30 of 55, is another specimen of a letter to be sent to customers, announcing an increase.

You may look at the entire thing, if you desire. Have you refreshed your recollection?

A. It does, yes.

Q. All right, sir. Now, this was a price increase, and you drafted a specimen letter, March 30 of '55 on other products of Huck; is that true? That is, the Lockbolt Raises of nine per cent and the increase referred to in Exhibit 50 had to do with steel lockbolts; isn't that true?

A. I believe that that had to do with aircraft lockbolts.

Q. Aircraft lockbolts?

A. Yes.

Q. Now, you're referring now in your specimen letter to commercial lockbolts; is that true?

A. Yes.

Q. And you say in this letter, this specimen letter, (Reading):

[fol. 554] "—in the past four years our costs have increased 26½% for labor——"

That was true?

A. I assume so.

Q. You were informed that was true by someone?

A. Evidently.

Q. Possibly Mr. Pelletier?

A. Possibly.
Q. He being in charge of—cost accountant?
A. Yes.
Q. (Reading):

"31% for aluminum, and 30% for steel, so that we now find it necessary to establish a new price structure for the Commercial Huckbolt."

Now, of course, you knew that was true?
A. Yes.
Q. And as far as you knew, this raise in the price of the Commercial Huckbolt was justified in order for the company to stay in business and make a nominal profit?
A. Yes, that's correct.
Q. I hand you Government's Exhibit 59, and ask you to read it and refresh your recollection.
You have read it, sir?
A. Yes.
Q. Now, in Government's Exhibit 59, dated May 25, 1956, and it is from Robert Looker to Armour, Benkert, Sterritt, Brilmyer and file.
[fol. 555] And the subject is Pheoll Lockbolt Type Fasteners, and your letter is to the effect:
(Reading):

"This memoranda will confirm some of the points discussed between John Sterritt and myself during our meeting today on the subject of the Pheoll Lockbolts."

Had Pheoll come out into the market with a lockbolt?
A. They had offered a lockbolt for sale to the Boeing Airplane Company in Seattle, Washington.
Q. All right. (Reading):

"Based on the information received that Pheoll presented a lockbolt to Boeing for evaluation Wednesday, May 23, we believe that the following should be considered at this time.

"It is extremely doubtful that Pheoll is aware of the methods claims allowances by the Board of Patent Examiners——"

Now, what was this methods claims on, the method of manufacturing a lockbolt or something else?

A. Something else.
Q. And what was that something else?
A. A method of installing the lockbolt fastener.
Q. All right. Is that confined to lockbolts or are lockbolt stumps included in it or just lockbolts themselves?
[fol. 556] A. Just lockbolts.
Q. Yes. (Reading):

> "—and that it is recommended that these claims be called to their attention at an early meeting (which I understand will be set up on or about June 11).
> "Both John and I believe that we should give strong consideration to licensing Pheoll under the claims of our Methods Patent."

Well, now, let me ask you had Townsend on May 25, 1956, an exclusive license or any license to this Methods Patent?

A. No.
Q. Was it part and parcel of the license agreement between Huck and Townsend?
A. The application may have been.
Q. Then you say that (reading):

> "Both John and I believe that we should give strong consideration to licensing Pheoll under the claims of our Methods Patent."

Was Huck free having a two year exclusive with Townsend?
Was Huck free to license Pheoll on May 25, 1956?

A. No.
Q. Then why did you express it that strong consideration should be given to doing something that Huck couldn't do?
A. Presumably they would be free a few months later [fol. 557] to issue such a patent license.
Q. That is, at the expiration of the two year period?
A. That is correct.

Q. You were speaking in the future, then, and not as of the present?

A. Yes.

Q. Now, I hand you the Government's Exhibit 60, and probably you don't need any refreshment on this one.

A. No, I do not.

Q. Yes. Now, the Government's Exhibit 60 is dated April 13, 1956, and it is addressed:

(Reading):

"Dear Mr. Armour:

"As you will recall during our meeting of June 26 in Mr. Stern's office, we discussed certain phases of the manufacturing company I am starting. The plans for the business are now being formulated, and accordingly I ask to be given a license to manufacture and sell lockbolt devices other than those lockbolt devices manufactured and sold by Huck as standard parts under Patents 2,114,493, 2,527,307—1,531,048 and 2,531,049 and under pending patents relating to shear lockbolt devices, to be made effective as soon as other commitments allow.

"We will not be in a position to start manufacture [fol. 558] for some months, but your early consideration and decision will allow proper planning to be made at these early stages, and will be greatly appreciated. May I discuss these matters with you during your next trip to Detroit?

"Very sincerely, Robert Looker."

Is that the first request that you made of Huck to Mr. Armour, that Huck grant you a license to manufacture some of his articles under some of its patents?

A. Yes.

Q. Now, what do you mean (reading):

"— I ask to be given a license to manufacture and sell lockbolt devices other than those lockbolt devices manufactured and sold by Huck as standard parts under——"

the patent numbers?

Do you mean by that that these would be non-standard lockbolts that you desired to manufacture?

A. Yes.

Q. Did you also desire to manufacture lockbolt collars?

A. Yes.

Q. Now, let me ask you, this company that you have purchased with others was a company that manufactured some [fol. 559] airplane hardware; isn't that right?

A. That is correct.

Q. And the airplane hardware that they manufactured was of the type that was used to hold down cargoes in carrier planes, commercial planes, freight planes; isn't that it?

A. Yes.

Q. Yes. They had never manufactured a lockbolt to your knowledge, the Brown Line Company?

A. Yes, they had never manufactured a lockbolt.

Q. They also had never manufactured any of the products that were manufactured by Huck?

A. Yes.

Q. You mean, I'm correct in that statement?

A. Yes.

Q. Now, what as to their physical equipment? What did they have in the way of machinery at the time of your request to manufacture lockbolts?

A. They had no such machinery.

Q. Well, you stated:

(Reading):

> "We will not be in a position to start manufacture for some months, but your early consideration and decision will allow proper planning to be made at these early stages, and will be greatly appreciated."

So at that time the Brown-Line Company, who had been [fol. 560] engaged in the manufacture of hardware for airplanes that was far divorced from the products manufactured by Huck, you wanted Huck to give you a license to manufacture lockbolts?

A. That is correct.

Q. That is of the—all lockbolts or just non-standard lockbolts?

A. Non-standard lockbolts.

Q. Yes. And to manufacture collars; is that true?

A. Non-standard.

Q. Non-standard collars?

A. Yes.

Q. Now, then, as a matter of fact, one collar—one collar of a lockbolt will serve to fit quite a number—quite a number of different size lockbolts, will it not?

A. Yes, different lengths, different length lockbolts.

Q. Different length lockbolts. Now, as an example, to begin with, as to pins, there are two qualities, aircraft and commercial?

A. Yes.

Q. The aircraft had two head styles; isn't that right?

A. Yes.

Q. The commercial have three head styles?

A. Yes.

Q. The grips, as to aircraft approximately are 32?

A. Yes.

[fol. 561] Q. In commercial, they're about 50?

A. (No response.)

Q. You're not so familiar with commercial?

A. I don't think there are that many.

Q. You don't think there are?

A. No.

Q. Well, if that would be true, there were two head styles and there are 32 grips, the same collar will fit 64 different lockbolts, won't it?

A. Yes.

The Court: Let's break here.

(Whereupon, a short recess was taken.)

[fol. 562] AFTER RECESS

ROBERT LOOKER, a witness called on behalf of the Government, having been previously duly sworn, resumed the witness stand, and testified further upon his oath, as follows:

Cross-examination. (Continued)

By Mr. Haggerty:

Q. We were just discussing, sir, in reference to collars, that there are 64 possible numbers, 60-4 sizes, and assortments that can be served by a collar.

Now, as to materials, there is one in steel, and three in aluminum, so that would be four times 64, or one collar would fit 256 different lockbolts; is that true?

A. No.

Q. No? Why not?

A. There are two aluminum collars, one used with the steel lockbolt and one used with the aluminum lockbolt.

Therefore, it's a separate division.

Q. Well, aren't there three different—you mean, that's different—steel is used with steel and aluminum is used with aluminum?

A. Sometimes.

Q. Sometimes? But it can be used interchangeably, can't it?

[fol. 563] A. No.

Q. No? You say positively no?

A. Yes.

Q. Now, as far as commercial lockbolts are concerned, if they have 50 different length grips and three head styles, if you multiply the 3 by 50, there's a hundred and fifty, and as material, the commercial are made in aluminum as well as steel; isn't that true?

A. Yes.

Q. And there's two different—two different types of aluminum; isn't that true?

A. For commercial?

Q. Yes.

A. Yes.

Q. And only one of steel?

A. Yes.

Q. So that would be three times 150, or a collar would fit, as far as commercial are concerned, 450 different sizes and shapes of lockbolts?

A. That's accurate, yes.

Q. Yes. Pretty good mathematicians, aren't we?

The Court: I think you stole that stuff.

Mr. Haggerty: Well, if you want a confession, your Honor, I'll confess that I am not a scientist and I am not a mathematician.

[fol. 564] The Court: That's all right.

Q. (By Mr. Haggerty, continuing) Now, prior to resigning from Huck Manufacturing Company as a vice president in charge of sales, prior to your resigning did you have any conferences or discussions with Mr. Armour or Mr. Benkert in reference to procuring a license to manufacture Huckbolts, prior to your resignation?

A. No.

Q. Now, referring——

A. (Interposing) Exeuse me, sir. May I qualify my last answer, please?

Q. Yes.

A. The sequence of events relating to my resignation were that Mr. Miner and I indicated the plans of my resignation with Mr. Benkert the evening prior to my having submitted my letter of resignation to the company.

During that meeting in Mr. Benkert's office, I believe we did mention the fact of our intentions or establishment of a separate business and very probably the fact that that separate business would request a patent license from the Huck Company.

Thank you.

Q. Now, in reference to the Exhibit 60, Government's Exhibit 61, rather, you wrote a letter from Brown-Line Corporation on October the 23rd, 1959, and you say:

[fol. 565] (Reading):

"Dear John:"

This is a Dear John Letter.

(Reading)

"With reference to our letter of October 13, 1959, it has come to our attention that the Department of Justice is conducting an investigation to determine the extent of monopoly Huck may have over the lockbolt industry.

"If this contention is shown to exist, we would prefer not to be a party to what might later be shown to be the augmentation of an illegal monopoly.

"We therefore feel only licensed to offer our invention on a non-exclusive basis, and it is requested that paragraph two be changed accordingly.

"As you will recall, on July 13, 1956, I wrote a letter to Mr. A. W. Armour requesting a lockbolt patent license, which request was denied 'because of certain complications which we have not been able to surmount.'

"We again request that we be granted a patent license under Patents——"

and they are numbered (reading):

"—to manufacture and sell lockbolts, being well equipped for their design, manufacture, and sale. [fol. 566] "Looking forward to hearing from you, I remain."

So you, on October 23, 1959, in your Dear John letter sent to Mr. Sterritt, (reading):

"—it has come to our attention that the Department of Justice is conducting an investigation to determine the extent of monopoly Huck may have over the lockbolt industry."

Where, as a matter of fact, sir, you were already, were you not, and had been in touch with the Government a year prior and had given to the Government a complaint

which instituted the investigation, the Grand Jury and the indictment that is before this Court and Jury, had you not?

A. I gave such a complaint to the Government, yes.

Q. Yes. Then why did you say that it had come to your attention, when you knew well that you were the person that initiated the complaint and had investigated—initiated the investigation by the Department?

A. Prior to the letter of October 23, 1959, it was not within my knowledge that the Department of Justice had acted upon the complaint which we had made, nor had they started an investigation.

The knowledge that we had that an investigation was being conducted by the Department of Justice, possibly [fol. 567] as a result of the complaint which we submitted to the Government, was just shortly prior or just prior to this letter, so it was a new bit of information for us.

Q. Yes. Now, as a matter of fact, on October 23rd, 1959, by that time, and on the 17th of April, 1959, you had mailed an affidavit to the Department of Justice or, rather, your attorney, William H. Pavitt, Jr., had mailed a letter to the Department of Justice, enclosing your affidavit, and it was addressed to Charles L. Beckler, Anti-Trust Division, U.S. Department of Justice, Washington 25, D.C.; isn't that true?

A. Yes, it is.

Q. That was all prior to the Dear John letter?

A. Apparently, yes.

Q. So you didn't have to have anything called to your attention?

There was information actually furnished by you that was in the Department of Justice?

A. I didn't so indicate, either.

Q. Well, aren't we splitting hairs, when you say "—it has come to our attention that the Department of Justice is conducting an investigation," when you knew full well from the time you made the complaint, had the first conversation with an Assistant Attorney General of that Department and had filed your complaint and filed an affidavit that that information was before the Department? [fol. 568] A. I knew that, yes.

Q. Now, supplementing your letter of October 23, 1959,

on December 3rd, '59, you wrote a letter to John Sterritt, another Dear John letter, and you asked him to correct numbers of patents that you had referred to in your letter of October 23rd, '59, and you say, among other things:

(Reading):

"That's what I get for using my faulty memory in not looking up the numbers."

A. Yes.

Q. Then do you consider that you have a faulty memory as of this time?

A. It sometimes is, yes.

Q. Yes. And do you consider that you had a faulty memory when you gave information to the Department of Justice?

A. No.

Q. Then you draw the line that there are times when your memory is infallible, isn't that correct?

A. I do not.

Q. I see. Now, despite the Dear John letter of October 23rd, 1959, and your apprehension of being dirtied up by a Government investigation and your desire not to be involved in it in any way, on November the 9th, 1959, you write another Dear John letter, addressed to John Sterritt, and in that letter you give him (Reading):

"Many thanks for your letter of November 4, 1959. [fol. 569] "The matter of requested patent license should perhaps be given a greater definition of intent on our part for the consideration of the Huck Company. If such a license is granted, we would only manufacture lockbolt collars at this time on screw machines we now own——"

Now, stop there. At the time that you wrote that letter, November the 4th, '59, isn't it true that the only machine equipment that you had in Brown-Line that would permit you to make on screw machines collars, lockbolt collars?

A. If I understand your question, which I'm not certain I do——

Q. (Interposing) So you well understand it, as of November the 9th, 1959, isn't it a fact that the machinery in the

Brown-Line Corporation plant as of that date, was only equipped to make collars?

A. That is correct.

Q. And, further, you say (Reading):

"—we would only manufacture lockbolt collars at this time on screw machines we now own, and enter lockbolt pin manufacture as machinery is procured for that purpose. The license we request is not by us an admission of validity of the patents——"

[fol. 570] In other words, you're asking for a license but you will not admit the validity of the patents that were issued to Huck; is that correct?

A. That is correct.

Q. Yes. Under which the license would be issued, you didn't sincerely believe that you had much of a chance to get a license unless you would admit the validity of the Huck patents, did you?

A. That was my hope, yes.

Q. You knew John Sterritt pretty well, didn't you?

A. Yes.

Q. You know he's a very careful patent lawyer?

A. Yes.

Q. You knew Watson Armour, did you not?

A. Yes.

Q. Knew him quite well?

A. Yes.

Q. And you knew that he would never consent to issue a license unless the recipient of the license, the licensee, would admit the validity of patents?

A. I didn't know that, no.

Q. Didn't you—didn't that impress you at all?

A. That perhaps was a concern of mine, but at the time not a primary concern.

Q. Yes. (Reading):

"—and to sell such parts in open non-restrictive com-[fol. 571] petition, for which right we will agree to pay the Huck Company a reasonable royalty. Our request for such a license has been pending with the Huck Company for about three and a half years, and a reply will be appreciated."

Now, why, if, on October the 23rd, 1959, you're apprehensive of doing business with Huck, because of investigation, would you, on November the 9th, 1959, make an offer to do business with Huck?

A. We were not apprehensive on doing business with Huck, as such. We were apprehensive on taking a patent license which had features in it which might be considered to be as contributing to the establishment of an illegal patent monopoly. The consideration that we had at that time was that we would like to be a patent licensee, but not under such terms where we would be considered party to the establishment or the augmentation of an illegal patent monopoly.

Q. Now, when you wrote your letter of October 23rd, '59, and your letter of November the 9th, 1959, requesting—first of all, in your first letter of October 23rd, you say "we would prefer not to be a party"—in other words, you're withdrawing a prior offer made to then do business, but on November the 9th, 1959, several days later, you [fol. 572] offered to do business with Huck.

Had you informed anyone at Huck at that time, either October 23rd or November the 9th, when you offered to do business with them, that you had on October the 27th, 1958, made a complaint about Huck to the Anti-Trust Division of the Department of Justice?

A. I indicated to Huck at a previous time that it was my intention to do so.

Q. But had you told them that you had done so?

A. I had not.

Q. Now, on March the 2nd, 1960, did you know whether or not the Department of Justice, Anti-Trust Division, was making an investigation of the complaint that you had filed October 27th, 1958?

A. On March the——

Q. (Interposing) 2nd, 1960?

A. Was that—may I ask a question, sir?

Q. Go ahead.

A. Was the October Dear John letter dated 1960 also?

Q. No, sir. I'll give you those letter dates again.

The first Dear John letter—it's like we're trying a divorce case—was October 23rd, 1959.

The second one was November the 9th, 1959. The letter

I'm referring to is the Government's Exhibit 65, and it is dated March the 2nd, 1960.

[fol. 573] Did you know, then, by March 2nd, 1960, that the Federal Government was investigating the original complaint that had been filed by you on October the 27th, 1958?

A. Yes.

Q. Despite that fact, you pursued your request of October 23rd and November 9th. And we have a third letter, the Government's Exhibit 65, a Dear John letter, and you say: (Reading):

> "I wonder if you would be so kind as to reply to my letters of October 23, 1959, and November 9, 1959, on the subject of our request for a lockbolt license.
>
> "If a license is to be granted, we would like to get started, and if it is not to be granted, we want to know that too so that we might proceed with other plans. As it is, we do not know the intent of the Huck Company and are therefore unable to proceed with the good development of our company's business in face of the Huck Company's domination over the lockbolt industry."

Now, as a matter fact isn't it true, Mr. Looker, that you wrote this letter of March 2nd, 1960, at the suggestion of your counsel?

A. No.

Q. Isn't it a fact that you wrote it at the suggestion of [fol. 574] attorneys in the Anti-Trust Division?

A. No.

Q. You're positive of that?

A. I am positive.

Mr. Lipson: I object strongly to the imputations in that question. I think it is grossly improper.

Mr. Haggerty: I don't think it is.

The Court: It may stand.

Mr. Haggerty: I think it is perfectly proper.

Q. (By Mr. Haggerty, continuing) We shall come back to that at a later time, witness.

Now, the Government has shown you and introduced into evidence, as Government's Exhibit 66, a letter from

the Olympic Screw and Rivet Company of Downey, California, from Mr. Maness, the President of that Corporation, addressed to you. And after congratulating you on being Vice-President in charge of sales he mentions in this letter:

(Reading):

"Speaking of licenses, I would also like you to give some thought in considering us for a license on your lockbolt. I am sure we could do a good job for you."

This is dated December 27, 1954. Quite properly, on September 29, 1954, you wrote to Mr. Maness, President of the Olympic Screw and Rivet Corporation, you thanked him for his letter of September 27th, and fine compli-
[fol. 575] ments, and you tell him you intend to attend the Titanium Symposium in Cleveland.

(Reading):

"We can also discuss matters of a lockbolt license at that time but I am afraid that there is very little we can discuss of real value for we have just signed a lockbolt license with the Townsend Company.

"Looking forward to see you then, I remain,".

Now, as a matter of fact, at the time that Mr. Maness of the Olympic Screw & Rivet Corporation applied for a lockbolt license, Huck was not in a position to give him one, because it had a two year exclusive from September 14, '54, with the Townsend people; isn't that true?

A. That is true.

Mr. Haggerty: Has the Government the original of a letter, October 10th, 1958, addressed to Huck Manufacturing Company, attention of Mr. A. Watson Armour, president, consisting of three, four pages, and an attachment from Brown-Line Corporation, signed by R. Looker?

Mr. Lipson: Does it bear any identifying number?

Mr. Haggerty: No, sir, that's all I have of it.

Mr. Lipson: May I ask if this was obtained from the deposition?

Mr. Haggerty: It was. It was—it was obtained from
[fol. 576] the deposition.

Now, that's my best information.

Mr. Lipson: May I examine this before I give you an answer?

Mr. Haggerty: Surely. May I sit down as an aged veteran of the Court, your Honor, while he looks over a three-page letter?

The Court: Yes.

Mr. Haggerty: Thank you, your Honor.

Mr. Lipson: Your Honor, I can't speak with assurance whether or not we have this letter, and what the original is. This is a photocopy of a copy, and if, by the original, Mr. Haggerty the original copy of which this photocopy was made, I think Mr. Looker has that, if he refers to the original from which the copy from which this photocopy was made.

I don't believe we have that, but I—as I say, I cannot answer it with—with absolute assurance at this time. I would have to look.

Mr. Haggerty: I'll give you what the Government number is. It's J-1042.

Mr. Lipson: The identifying number would ease things considerably.

Mr. Haggerty: I have to thank Mr. Dickey for that. He's the identifier.

[fol. 577] May we then mark this for identification as an exhibit, with the understanding that the copy in the Government's possession will be turned over as a substitute?

Mr. Lipson: Your Honor, may I merely say that there were approximately three or four thousand documents originally noted, of which quite a number, I would say more than half, were returned to the parties.

Now, I would have to check our records to see if that was among the ones we retained or among the ones we returned.

If obviously, it was the ones we returned, we don't have it. But if it was originally retained, we still do have it and we will produce it.

The Court: I think counsel is astute enough to present it and see what happens.

(Whereupon, a four-page photostatic copy of a letter, dated October 10, 1958, was marked as Defendant's Exhibit E, for identification by the Reporter.)

Q. (By Mr. Haggerty, continuing) I'll have to ask you to tax your eyes, Mr. Looker. This is the best we can do. I'll ask you to examine the Defendant's Exhibit, for identification, E.

The Court: What is it, a letter? Is that what it is?

Mr. Haggerty: It is a letter, yes, your Honor.

[fol. 578] The Court: Dated?

A. October 10, 1958.

The Court: Thank you.

Q. (By Mr. Haggerty, continuing) You have read it?

A. I have.

Q. Now, witness, on October the 10th, 1958, you wrote a letter to Mr. A. Watson Armour; isn't that true?

A. Yes, it is.

Q. And in that letter you make a lot of statements in reference to design and patent; isn't that true?

A. Yes, it is.

Q. And that was following—was not—this letter followed an occasion when you had presented to Boeing a collar; isn't that true?

A. That is correct.

Q. And Boeing, because when the collar was put on a Huckbolt or lockbolt, were fearful that it violated and infringed the Huck patents, and so Boeing would not purchase your collars; isn't that true?

A. I can't speak for the motivations or actions of the Boeing Company.

Mr. Lipson: Your Honor, I object to this line of questioning on the ground that it has no relation at all to the charges in the indictment.

Mr. Haggerty: I use it for the purpose that is men-

[fol. 579] tioned in this letter, which, I think, is highly proper.

The Court: Proceed.

Mr. Haggerty: Here's a letter sent by Mr. Looker——

The Court: Proceed.

Q. (By Mr. Haggerty, continuing) Well, in any event, Boeing would not purchase your collars?

A. They cancelled an order they had previously given our company.

Q. Yes. You say (reading):

> "Our purpose in writing you at this time is to ask your written assurance that the above reported impression created among the Boeing personnel by your Mr. Mathews, is not the official view of your company, but rather was merely 'salesmen's talk' in an effort to push your products with this customer, and that there will be no further harassment or claim to our customers that we are not free to manufacture and sell the above-described collars."

And you were talking there about the lockbolt collars, weren't you?

A. I was talking the lockbolt collar of a specific design, shown as an enclosure to that letter, yes.

Q. Yes. (Reading):

> "In the absence of such assurance, we would be faced with determining what steps should be taken [fol. 580] by us to clarify the situation thus created. The only steps apparent at present are:
>
> "1. To await your suit against us for patent infringement;
>
> "2. To institute suit against you for declaratory relief and/or for damage under the Anti-Trust Laws; and
>
> "3. To discuss the entire blind rivet and lockbolt situation with the Department of Justice Anti-Trust Division with a view to convincing the latter of need for public action under the Anti-Trust Laws."

In other words, in this letter of October the 10th, 1958, addressed from yourself to Mr. Armour, you give him three alternatives, do you not?

A. Yes. I believe there are four.

Q. Well, you have got them numbered, one, two, three.

A. The previous alternative was to cease harassment.
Q. Yes.
A. So, therefore, this would be four.
Q. What you considered harassment?
A. Yes.
Q. (Reading):

"In this latter connection, it appears to us that there is a serious question whether, if you are ac-
[fol. 581] tually asserting your unexpired patents to prevent our supplying simple unpatented collars to users such as Boeing, under the circumstances above indicated, you are attempting to monopolize this line of commerce beyond that which is permitted under the patent laws of the United States.

"It is also our thought that certain other actions taken by your company in the past to preserve to itself and to its licensees this important segment of the fastener business might merit public action by the Anti-Trust Division of the Department of Justice.

"Your early advice will relieve us of the necessity of prematurely selecting one of these alternatives."

Did you receive a reply to that letter?

A. No.
Q. And despite your ultimatum and your threat of taking the matter up with the Department of Justice, you did not receive any reply?
A. If—if there was a reply, it came sometime later and I am not certain whether there was a reply or not. I do know that we waited about four weeks and then we made our complaint, as stipulated.
[fol. 582] Q. Yes. As a matter of fact, and it is true that in both, prior to writing this letter, you had conferred with your patent counsel?
A. That is correct.
Q. And part of the language therein contained is his language, isn't that true?
A. Yes.
Q. And you were trying to smoke Mr. Armour out; isn't that true?

A. No.

Q. In other words, you were more than trying to smoke him out, you were telling him what you were going to do?

A. We were making a plea for the harassment to cease.

Q. Yes, and if what you called harrassment did not cease, then you were going to follow one of two alternatives; you were going to file a suit for the declaratory judgment and ask for money damages or else, under the Anti-Trust Laws —or you were going to report it to the Anti-Trust Division of the Department of Justice?

A. That is correct. There was a third.

[fol. 583] Q. Yes. And the third—the third one, he could institute suit against you?

A. Yes.

Q. Yes. And you had made up your mind, if you didn't have this matter resolved to your satisfaction, you were going to make a report to the Department of Justice?

A. At that time——

Q. (Interposing) Anti-Trust.

A. At that time we hadn't decided what we would do.

Q. But you had discussed that and had thought along that line, had you not?

A. That was a possibility, yes.

Q. Because it's expressed in your letter as a possibility?

A. Yes.

Q. Now, following that letter, you say you waited about four weeks and received no reply?

A. Yes. It may have been six weeks.

Mr. Lipson: Your Honor, while we are on the subject of the letter, perhaps Mr. Haggerty would like to have the original and then—we have it and can make it available, unless he is satisfied with the photocopy in evidence.

Mr. Haggerty: Well, we will work along with what we have. Thank you.

Mr. Lipson: You are quite welcome, Mr. Haggerty.

[fol. 584] Mr. Haggerty: We may want it later. It's hard reading, but this is a young man with good eyesight.

Q. (By Mr. Haggerty) So, you waited four or six weeks. As a matter of fact, witness, you waited exactly seventeen days, didn't you?

A. It seems to me it was longer than that.

Q. Well, you have put yourself on record that it was four or six weeks. Now, you made your complaint on October 27, 1958, seventeen days later?

A. Yes.

Q. So there will be no mistake about it, you even attached a copy of your letter of October the 10th, '58 to Mr. Armour, didn't you?

A. Yes.

Q. Now, isn't it a fact that, regardless of what answer Mr. Armour would make to your ultimatum, the matter had developed in your thought process, with the advice of your counsel, to such a posture that you intended in any event to make a complaint to the Anti-Trust Division of the Department of Justice?

A. No.

Q. In other words, then, you didn't make this complaint to the Department of Justice as a public-spirited citizen; you made this complaint to the Department of Justice because you could not procure from Huck Manufacturing [fol. 585] Company and Mr. Armour the satisfaction that you wanted and as you requested in your letter of October 10th, 1958; isn't that a fact?

A. That is not——

Mr. Lipson: (Interposing) Your Honor, I feel I must object here. The question in issue is not Mr. Looker's motives, but whether the facts he has testified to are true or not.

Mr. Haggerty: Motive and intent is just as important, more important in this witness as probably any witness.

The Court: It may stand.

Q. (By Mr. Haggerty) Now, following your original complaint, sir, of October 27, 1958, you continued to correspond, did you not, with Mr. Sterritt?

A. Yes.

Q. And you corresponded with Mr. Sterritt for the purpose of obtaining a statement of Huck's position from Mr. Sterritt?

A. Yes.

Mr. Haggerty: Will you mark this, please?

(Whereupon, a document was marked as Defendant's Exhibit No. F, for Identification, by the Reporter.)

Q. (By Mr. Haggerty) You had authorized, had you not, your attorney, Mr. Pavitt, to correspond with the Depart-
[fol. 586] ment of Justice on and in your behalf?

A. Yes.

Q. Yes. And on November the 7th, 1958, as exhibited by Defendants' Exhibit F, for purpose of Identification, we find that Mr. Pavitt wrote a letter to Charles L. Beckler (spelling): B-e-c-k-l-e-r, Esq., Anti-Trust Division, United States Department of Justice, Washington, D. C.?

Mr. Lipson: Your Honor, if we are going to have the document read from, I prefer it to be put in evidence.

The Court: Let's indicate the date.

Mr. Haggerty: The date is November the 7th, 1958.

The Court: All right.

Mr. Haggerty: I have no objection to doing that. I will now offer this in evidence, after furnishing my brother with an opportunity of seeing it.

Mr. Lipson: No objection.

Mr. Haggerty: I also tender in evidence, at this time Defendants' Exhibit E, which is the letter of October 10th, '58, from Mr. Looker of the Brown-Line Corporation—by Mr. Looker, it's President—to Mr. A. Watson Armour.

The Court: That is the copy that originally the Government had?

[fol. 587] Mr. Lipson: We have no objection to this, your Honor.

The Court: Exhibits E and F may be admitted.

Mr. Haggerty: Now, your Honor, I will read portions of this letter.

The Defendants' Exhibit F is on the stationery of Smyth (Spelling) S-m-y-t-h & Roston (spelling) R-o-s-t-o-n, Patent, Trademark and Copyright Causes, 4262 Wilshire Boulevard, Suite 320, Los Angeles 5, California, with a telephone number.

And it shows in the upper hand that there is Smyth, Roston, a Keith D. Beecher and Jess M. Roberts, a registered patent attorney. And this letter is from that firm and signed by William H. Pavitt (spelling) P-a-v-i-t-t, Jr. It is addressed to Charles L. Beckler, Esq., Anti-Trust Division, U. S. Department of Justice.

(Reading):

"Dear Mr. Beckler:

"The Huck Company finally replied through its counsel, John C. Sterritt, Esq. of Harness, Dickey & Pierce, to Brown-Line Corporation's letter of October 10th, copy of which Mr. Looker and I left with you when we conferred with you on October 28th. A copy of Mr. Sterritt's reply is enclosed.

[fols. 588-591] "Mr. Looker has simply acknowledged Mr. Sterritt's reply on behalf of Brown-Line Corporation rather than take issue by extensive correspondence with the points made in Mr. Sterritt's letter. For your information, however, Mr. Looker has provided us with the following comments respecting the points raised in Mr. Sterritt's letter."

We will not read the points. (Reading)

"We would appreciate being advised as soon as it is known whether any investigation of the Huck-Townsend situation will be authorized by the Division.

Smyth & Roston,
Pavitt, Jr."

And a copy to R. Looker of the Brown-Line Corporation.

* * * * * * *

[fol. 592] Cross-examination. (Continued)

By Mr. Haggerty:

Q. Do you recall, Mr. Looker, that on September the 3rd, 1954, you spent practically the whole day with Mr. Sterritt, in Mr. Sterritt's office, going over a draft of the agreement, the Exhibit 17—Government's Exhibit 17?

A. I don't recall.

Q. You don't recall that?

A. No.

The Court: You do not recall what?

A. I don't recall spending the day, or substantial part of the day of September 3, 1954, with Mr. Sterritt.

The Court: That is Exhibit No. 17, you said?

Mr. Haggerty: 17.

The Court: And the date again?

Mr. Haggerty: September—the date of the meeting was September 3rd, 1954. It is the agreement which was finally [fol. 593] finalized on September 14, 1954.

The Court: All right.

Q. (By Mr. Haggerty) Handing you the Government's Exhibit 17, which is a finalized version of the license contract between Huck Manufacturing Company and Townsend Corporation—or Townsend Company, I will ask you if you, by looking it over, it refreshes your recollection that you were with Mr. Sterritt the greater portion of the working day of September 3rd, '54?

A. I don't deny it. I don't recall it.

Q. You don't deny it.

It would be nothing unusual for you having been with Mr. Sterritt on September the 3rd, isn't that true, 1954?

A. That is true, yes.

Q. Part of your duties with Huck Manufacturing Company during that interim of time was to consult with a patent counsel?

A. Yes.

Q. Now, you have told us that you have—and I think it has been received as an exhibit—that you requested a license to manufacture specials, is that true?

A. Yes.

Q. And you received a reply to that letter, did you not?

A. Yes.

(Whereupon a letter was marked Defendant's Exhibit [fol. 594] No. G, for identification, by the reporter.)

Q. (By Mr. Haggerty) I hand you, marked for identification, the Defendant's Exhibit G and ask you to read it, if that refreshes your recollection?

A. It does, yes.

Q. Mr. Armour promptly replied to your request, did he not?

A. Yes.

Q. And he stated that he thanked you for your letter of July 13th.

Mr. Haggerty: At this time I hand for examination to brother counsel Defendant's Exhibit G, for the purpose if he has any objection thereto.

The Court: What is the date of that letter, Mr. Haggerty?

Mr. Haggerty: July the 13th, 1956.

Mr. Lipson: No objection.

Mr. Haggerty: Received in evidence, your Honor?

The Court: It may be received.

Q. (By Mr. Haggerty) Defendant's Exhibit G reads and is on the stationery of the Huck Manufacturing Company, and it is dated July 18, 1956. Addressed to Mr. Robert Looker, the Brown-Line Corporation:

"Dear Bob:

"Thank you for your letter of July 13th. Your request gives rise to certain complications which we have not [fol. 595] been able to surmount. We are giving the matter further consideration and will let you know the results at a later date.

"Sincerely yours, "Huck Manufacturing Company.
"A. Watson Armour, III, "President."

Now that was in reply to your first request for a license, isn't that true?

A. Yes.

Q. So there will be no misunderstanding, you didn't ask for a license to manufacture steel lockbolts, that is, of what would be called the ordinary lockbolts?

A. I believe the request was directed to special type of lockbolt devices.

Q. Special?

A. Yes.

Q. And what do you mean by "specials"?

A. Other than standard.

Q. In other words, your requests were for specials which are unusual size lockbolts, is that true?

A. Size, material or function.

Q. Yes. And they are a matter—they are lockbolts that are not kept in regular stock, is that true?

A. They weren't manufactured at that time.

[fol. 596] Q. They weren't manufactured at all at that time?

A. No.

Q. Now, you replied to Mr. Armour's letter, did you not?

A. I am not certain if I did or not.

(Whereupon, a letter was marked Defendant's Exhibit No. H, for identification, by the reporter.)

Q. (By Mr. Haggerty) I hand you marked for identification the Defendants' Exhibit H, and ask you if that refreshes your recollection?

A. It does, yes.

Q. And is that a photostatic copy of a letter that was written by you?

A. Yes.

Q. And the original was signed by you?

A. Yes.

Mr. Haggerty: I hand to counsel, for examination, Defendant's Exhibit, marked for identification, H.

Mr. Lipson: Your Honor, we have no objection to this document, except we would like to note that there apparently is no date on this letter, except there is a handwritten notation on the margin which has apparently been applied to the photostatic copy itself, and we would object to that being included along with the letter.

Mr. Haggerty: We are agreeable to exclude that.

The Court: All right.

[fol. 597] Mr. Lipson: Otherwise, we have no objection.

Q. (By Mr. Haggerty) Now, in reply to Mr. Armour's letter—it is on the stationery of Brown-Line Corporation and without date on the letter itself—it is addressed to Mr. A. Watson Armour, president, Huck Manufacturing Company, 141 West Jackson Boulevard, Room 4015, Chicago 4, Illinois.

"Dear Mr. Armour:

"I thank you for your letter of July 18th on the license requested. I appreciate the complexities of the question at hand and the time required to see them through. I do hope, however, that we will be able to

get the matter settled while I am still here to save extra travel and trouble of negotiating 3000 miles away and to permit the kind of planning a new business must have.

"Thank you again for your interim report.

"Yours sincerely, "The Brown-Line Corporation,
"Robert Looker."

Now, in the year 1957, Mr. Looker, did you apply for a patent on a lockbolt?

A. Yes. I believe that was the year, I am not certain of it, though.

Q. Your best recollection?

[fol. 598] A. Yes.

Q. And eventually that patent to manufacture that lockbolt, use and sell, was granted to you, is that right?

A. Yes.

(Whereupon, a letter was marked Defendants' Exhibit No. I, for identification, by the reporter.)

Q. (By Mr. Haggerty) Now, I hand you, marked for identification, the Defendant's Exhibit I, and ask you to read it.

Mr. Lipson: Your Honor, if I may, I would like to have a chance to examine the document prior to——

The Court: (Interposing) I think he meant read it to himself.

Mr. Haggerty: Read it to himself, not aloud, of course not. I am sorry.

A. I have read the document.

Q. (By Mr. Haggerty) You have read it. Now, does that refresh your recollection that you wrote to the Illinois Tool Works in reference to this lockbolt?

A. Yes.

Q. And your purpose in writing the Illinois Tool Works was to interest them in taking a license from Brown-Line Corporation?

A. Yes.

Q. Isn't that true?

A. Yes, it is.

Q. Now, you received a reply to your letter, did you not?
[fol. 599] A. I believe so, yes.
Q. Well, so that there will be no doubt in your mind——

(Whereupon, a letter was marked Defendants' Exhibit J, for identification, by the reporter.)

Q. (By Mr. Haggert) A rather poor copy, it is the best I can afford.

The Court: What is the date of this?

A. April 18, 1957.
Q. (By Mr. Haggerty) So, on April the 18th, 1957, you received a reply to your letter from the Illinois Tool Works to your letter of April the 8th, 1957, which is the date of the exhibit. I can't ask you to see at that distance—isn't that correct, referring (handing exhibit to witness)?
A. Yes, it is.
Q. And that refers to the Defendants' Exhibit I, so marked for identification.
Now, considerable correspondence passed between you —or the Brown-Line Corporation and the Illinois Tool Works, isn't that true?
A. I believe so.
Q. In reference to—in your effort to have them take a license from you on this particular lockbolt?
A. Yes.

(Whereupon, a letter was marked Defendants' Exhibit No. K, for identification, by the reporter.)

[fol. 600] Q. (By Mr. Haggerty) I hand you marked for identification the Defendants' Exhibit K and ask you to read it to yourself.
A. (Witness complies.)
Q. Have you read it?
A. Yes, I have.

Mr. Haggerty: I hand to counsel for examination Defendants' Exhibit K, so marked for identification.
Mr. Lipson: We have no objection to this document.
The Court: It may be received.
Mr. Haggerty: I offer it in evidence, may it please the Court.
The Court: It may be received. What is the date?

Mr. Haggerty: I shall read it, your Honor.

The Court: All right.

Mr. Haggerty: It is dated September the 10th, 1957. It is on the stationery of the Illinois Tool Works. At 2501 North Keeler Avenue, Chicago 39, or 30, I can't make it out, Illinois.

"Mr. Robert Looker, President "Brown-Line Corporation, "111 Main Street, "El Segundo, California.
"Subject: Looker Commercial Lock Bolt."

Then this was a commercial lockbolt?

A. Yes.

[fol. 601] Q. In distinction from a lockbolt that was to be used in airplanes?

A. Yes.

Q. (Reading):

"Dear Bob:

"I would like to apologize for not forwarding our legal department's comments pertaining to your lock bolt application sooner. I have been quite busy since returning from the West Coast as Milt Miner and his boys have somewhat snowed me under with projects."

Now, was Milt Miner a stockholder and an officer of the Brown-line Corporation?

A. Yes.

Q. He was at that time?

A. Yes.

Q. He still is?

A. Yes.

Q. (Reading):

"I am enclosing a copy of a confidential letter which originated in our patent department, for your inspection and comments. It seems in essence that our attorneys feel that you would be allowed some specific improvement protection on your device, but would still be dominated by Huck Patent 2754703."

And that is a Huck Patent, to your knowledge?

[fol. 602] A. Yes, it is.

Q. (Reading):

"I am sure that you are very familiar with the existing and expired art on fasteners of this nature and also are aware of the claims made in the above-mentioned patent. We would sincerely appreciate your comments to this letter before further work can be done on our part.

"I am sure you know that we are definitely interested in manufacturing a fastener of this type as this would be undoubtedly beneficial to Brown-Line Corporation, Miner and Associates, and Illinois Tool Works."

Now, as to identification of Miner and Associates, was that a sales organization under the name of Miner and Associates?

A. Yes, it is.

Q. Mr. Miner and some other persons were partners, or was it a corporation, if you know?

A. It was a corporation.

Q. Were you interested in that corporation?

A. No.

Q. That is, Mr. Miner and someone else were the stockholders in that corporation?

A. Yes.

Q. (Reading):

"I am also enclosing a sketch of a thread rolled pigtail."

[fol. 603] Now, that don't mean anything to me, and I don't believe it means much to the jurors. We don't think of pigtails as being thread rolled. Now, what is a thread rolled pigtail?

A. I am not sure it means much to me right now either.

Q. I see. (Reading):

"Which would be used as an installation means to drive the blind bolt which I have developed. It has been placed on file in our patent office and I thought that you may be interested in seeing that we have incorporated your suggestion and sincerely appreciate your assistance.

"Yours very truly, "Illinois Tool Works, "Thomas R. Boyd——"

(spelling) B-o-y-d,

"Executive Engineer."

(Whereupon, a letter was marked Defendants' Exhibit No. L, for identification, by the reporter.)

Q. (By Mr. Haggerty) I hand you, marked for identification, the Defendants' Exhibit L, and ask you to read it to yourself.

A. (Witness complies.)

Q. Have you read it, sir?

A. I have, yes.

Mr. Haggerty: I hand to counsel for examination de-
[fol. 604] fendants' Exhibit No. L, so marked for identification.

Mr. Lipson: We have no objection to this document.

Q. (By Mr. Haggerty) Does this bear your—this is a photostatic copy of a letter which you signed, is that true?

A. I assume so, yes.

Q. Yes.

A. I don't recall having dictated the letter.

Q. You don't have any distinct recollection, but this does refresh your recollection, and I say "this", I mean Defendants' Exhibit L, so marked for identification?

A. Yes, it does.

Mr. Haggerty: I offer it in evidence, may it please the Court.

The Court: It may be received.

Q. (By Mr. Haggerty) This is a letter dated November 27, 1957, and it is addressed to Mr. John S. Hawley, (spelling) H-a-w-l-e-y.

"Manager, Market Planning, "Illinois Tool Works, "2501 North Keeler Avenue, "Chicago 39, Illinois.

"Dear John:

"This letter is in reply to Tom Boyd's letter of September 10, and is addressed to you as I understand that

Tom is in process of moving his activities to Califor-
[fol. 605] nia. "I am enclosing a copy of a letter dated November 26 from our patent attorney, George Smyth."

George Smyth, (spelling) S-m-y-t-h, was the patent attorney who applied for the patent on this particular commercial lockbolt?

A. Yes.

Q. (Reading):

"—which gives the conclusions on a possible domination of Huck Patent 2,754,703 over our Application 639474.

"As you will note, Mr. Smyth's opinion is quite firm to the negative, and based upon which opinion, we would like to suggest patent license negotiation.

"Looking forward to the pleasure of hearing from you soon, we remain, "Brown-Line Corporation, "R. Looker, "President."

In other words, in the existing—in the exhibit—Defendants' Exhibit No. K, when they asked you for a reply under date of September the 10th, your reply was contained in the letter I have just read, November the 27th, 1957?

[fol. 606] A. Apparently, yes.

Q. Can you read your own handwriting?

A. Yes, generally.

Q. You can. All right.

(Whereupon, a letter was marked Defendants' Exhibit No. M, for identification, by the reporter.)

Q. (By Mr. Haggerty) I hand you a rather poor photostat marked Defendant's Exhibit M and a sheet of paper attached to it which seems to be a translation of your longhand writing.

Will you examine it.

A. (Witness complies.)

Q. You have read it?

A. Yes, I have.

Q. Now, did the negotiations that you conducted with Illinois Tool Works to license your commercial lockbolt to

them for manufacture, use and/or sale, did that ever develop——

A. (Interposing) No.

Q. (Continuing) —into a license agreement?

A. It did not.

Q. Did you, then attempt to interest others to license your commercial lockbolt?

A. Yes.

Q. And was amongst those that you attempted to interest the so-called Aviations Development, Inc.—Incorporated?

A. No.

[fol. 607] Q. How?

Did you attempt to interest Mr. John Bunney—(spelling B-u-n-n-e-y, Director of the Aviations Development, Inc.?

A. I believe it is Aviations Development Limited in England. There is an Aviations Development Incorporated, in Burbank, California. I did attempt to license the product to Aviations Development, Limited, in England, yes.

Q. Did your negotiations with them result in a license to the Aviations Development, Limited, in England?

A. No.

Q. Now, did you also attempt to interest Huck in licensing—Huck Manufacturing Company, in licensing this commercial lockbolt?

A. Yes.

Q. And did you succeed?

A. No.

Q. Did you attempt to interest any other source and did you, in your negotiations, with Huck, did you not proceed to the point where you sent four sheets of drawings of your commercial lockbolt to Huck?

A. Yes.

Q. And, as a result of that, you received some correspondence from Huck?

A. Yes.

[fol. 608] (Whereupon, a letter was marked Defendants' Exhibit No. N, for identification, by the reporter.)

Q. (By Mr. Haggerty) I hand you marked for identification the Defendants' Exhibit N, and ask you to read it to yourself.

A. (Witness complies.)

Q. You have read it?

A. Yes.

Mr. Haggerty: I hand to counsel for examination marked for identification Defendants' Exhibit N, a letter.

Mr. Lipson: No objection.

The Court: It may be received.

Q. (By Mr. Haggerty) The Defendants' Exhibit N is a letter on the stationery of Harness, Dickey and Pierce, attorneys and counselors, General Motors Building, Detroit.

Dated May 14, 1958.

"Mr. Robert Looker
"Brown-Line Corporation
"111 Main Street
"El Segundo, California.

"Dear Bob:

"Thank you for your letter of May 5. Attached hereto are the four sheets of drawings, figures one through sixteen, which you sent me.

"I am sure that you must realize that manufacture and sale of the fastener disclosed in these drawings [fol. 609] would be infringements of the Huck Lockbolt Patents with which you are familiar. They could only be manufactured and sold by Huck itself or someone licensed under the Huck Patents.

"We look forward to seeing you and Mary when you get back to Detroit.

"With best regards, sincerely, John Sterritt."

Now, was that the culmination of your negotiations with Huck, the letter of John Sterritt, in which he advised you that in his opinion the manufacture and sale of the fastener disclosed—that is the commercial lockbolt—by your drawings would be infringements of the Huck Lockbolt Patents?

A. I think there was another letter, too.

Q. A letter written by you or a letter written by Mr. Sterritt, if you have a recollection?

A. There was a letter written by someone at the Huck Company, I don't remember who.

Q. I see. But, in any event, you did not license this commercial lockbolt to Huck?

A. That is correct.

Q. As a matter of fact, have you ever licensed it to anyone?

[fol. 610] A. No.

Q. Have you attempted to license it other than to the companies which you have enumerated?

A. I don't believe so, no.

(Whereupon, a letter was marked Defendants' Exhibit O, for identification, by the reporter.)

Q. (By Mr. Haggerty) I hand you marked for identification Defendants' Exhibit No. O, and ask you to read it to yourself.

A. (Witness complies.)

Q. You have read it?

A. Yes.

Q. Now, prior to March 30th, 1960, you had made a request of John Sterritt to obtain a license from Huck for Brown-Line to manufacture and sell special lockbolts, isn't that true?

A. I believe there were two requests, one for special lockbolts, and one for general lockbolts.

Q. All right. And this letter, which is marked Defendants' Exhibit O, was the reply that you received?

A. This was a reply, yes.

Q. All right. It was a reply from John Sterritt?

A. That is correct, yes.

Mr. Haggerty: I hand to counsel for examination Exhibit marked for identification O—Defendants' Exhibit O.

Mr. Lipson: No objection.

The Court: It may be received.

[fol. 611] Q. (By Mr. Haggerty (Defendants' Exhibit O is a letter on the stationery of Harness, Dickey and Pierce, General Motors Building, Detroit, Michigan, dated March 30, 1960.

(Reading):

"Mr. Robert Looker
"Brown-Line Corporation
"111 Main Street
"El Segundo, California

"Dear Bob:

"This is in reply to your letter of March 2nd, 1960.

"I have been in Europe for five weeks, and I am just getting caught up in my correspondence.

"I am advised by Huck that business conditions at the present and within the foreseeable future do not justify the granting of any further licenses now."

Now, your request for this license, as evidenced by the reply, contained in the Defendants' Exhibit O, is a considerable period of time, namely, the reply came March 30th, 1960.

You had filed complaint with the Government on or about October the 27th, 1958, isn't that correct?

A. That is correct, yes.

Q. Now, this request that you made for a license and in which you received a reply in 1960 was simply for the pur-
[fol. 612] pose of obtaining additional information and possible additional evidence for—which to give to the Anti-Trust Division of the Department of Justice, isn't that right?

A. No, it is not.

Q. Well, let's examine it. You had filed a formal complaint?

A. Yes.

Q. You had on October the 28th, or thereabouts, conferred in Washington with a representative of the Department of Justice?

A. Yes.

Q. You had again filed an affidavit dated the 17th of April, '58—you had filed through your counsel, Mr. Pavitt, an affidavit with the Department of Justice?

A. Yes.

Q. You have before this—receiving this letter, the Defendants' Exhibit O, dated March 30th, 1960, filed a second

affidavit with the Department of Justice on the 26th day of March, 1960, had you not?

A. Yes, I had.

Q. So, you didn't have any sincere hope at that time that you would obtain a license of any kind from Huck, did you?

A. I did, yes.

Q. What was your hope predicated upon?

A. That the Huck Company would change its mind and issue a patent license to our company.

[fol. 613] Q. Did you think by that time that you had intimidated Huck to such a point where they would grant you a license?

A. I had intimidated no one.

Q. Do you recall the letter that you wrote to Mr. Armour giving him three, or possibly, four options?

A. I do, yes.

Q. And in that letter you mentioned the fact of a complaint being filed against Huck with the Department of Justice, Anti-Trust Section?

A. Yes.

Q. Don't you think, in all honesty, that that was a threat?

A. It could be construed to be as one, yes.

Q. Yes. And don't you think it was a threat with an implication of intimidation?

A. It would be a matter of interpretation.

Q. What is your opinion, that is what I am searching for?

A. My opinion is that the intimidation was in the opposite direction, and that our company was trying to establish a legal competitive business and was restrained from doing so.

Q. And you do not think, then, that at the time that you requested a license and Mr. Sterritt replied by the letter of March the 26th, or March 26th, 1960—you do not think, then, at that time you were attempting to use intimidation?

A. I don't believe so, no.

[fol. 614] Mr. Lipson: Your Honor, for the purposes of the record, is the letter—the date of the letter the 26th?

Mr. Haggerty: Well, I will check it. I may be wrong. It may be March 30th.

It is March 30th, thank you.

Mr. Lipson: You are welcome. May that be corrected so that the letter that we speak of is March 30th?

Q. (By Mr. Haggerty) Now, I think—strike that.

Did you have a meeting with Mr. Lipson in the month of October, 1960, at the City of Detroit?

A. I don't independently recall the date or the time.

Q. Do you recall that you testified in Detroit before a Grand Jury?

A. I do, yes.

Q. Do you recall that you did testify in the month of October, 1960?

A. No.

Q. You have no recollection?

A. Not of the month, no.

Q. Have you a recollection of having a visit, and a conference, a conversation with Mr. Lipson on or about October, 1960, in Detroit, perhaps on or about that time?

(Whereupon, a letter was marked Defendants' Exhibit No. P, for identification, by the reporter.)

[fol. 615] Q. (By Mr. Haggerty) I hand you marked the Defendants' Exhibit P, and ask you to read it to refresh your recollection. Read it to yourself.

A. (Witness complies.)

Q. Have you read it, sir?

A. I have, yes.

Q. Now, I will ask you, having read the exhibit, Defendants' Exhibit P, so marked for identification, does it refresh your recollection that on October the 14th, 1960, you wrote a letter to Mr. Lipson, attorney, Anti-Trust Division, Department of Justice, Washington, D.C.?

A. Yes.

Q. And is your recollection refreshed that in your letter to Mr. Lipson you mentioned a pleasant meeting in Detroit? Do you recall that?

A. Yes, I do.

Q. Now, does that refresh your recollection—memory, that prior to October the 14th, 1960, you did have a meeting with Mr. Lipson at the City of Detroit?

A. Yes.

Q. And that was in reference to the original complaint that you had made against the Huck Corporation?

A. It was in reference to a Grand Jury proceeding.

Q. All right, a Grand Jury proceeding?

A. Yes.

[fol. 616] Q. But, the origin of it was the complaint that you filed?

A. I don't know that, sir.

Q. You do not know that?

A. No.

Q. Now,——

(Whereupon, a group of letters were marked Defendants' Exhibits Nos. Q and R, for identification, by the reporter.)

Q. (By Mr. Haggerty) I hand you Defendants' Exhibit Q, so marked for identification, and ask you to read that letter to yourself.

A. (Witness complies.)

• • • • • • •

[fol. 617] Mr. Haggerty: I hand to Mr. Lipson marked Defendants' Exhibit Q, for identification.

Mr. Lipson: No objection.

The Court: It may be received——

[fol. 618] Mr. Haggerty: (Interposing) I am not offering it in evidence. It is merely for the purpose of refreshing his recollection.

The Court: All right.

Q. (By Mr. Haggerty) You did, did you not, sir, under date of October 21, 1960, receive a letter from the United States Department of Justice, addressed to yourself as president of the Brown-Line Corporation?

A. Yes.

Q. And that letter was signed by Mr. Robert A. Bicks, (spelling) B-i-c-k-s, Assistant Attorney General, Anti-Trust Division?

A. Yes.

Q. And when you received that letter, you showed copies or had copies made for Mr. Pavitt?

A. Yes.

Q. Mr. Miner?

A. Yes.

Q. And a Mr. White?

A. Yes.

Q. And can you identify Mr. White?

A. Mr. White, named John A. White, and he is the company's general counsel.

Q. I see.

The Court: Let's take a ten minute recess.

[fol. 619] (At 10:40 o'clock A.M., a short recess was had.)

AFTER RECESS

(Whereupon, a photostatic copy of a letter, dated October 20, 1960, was marked as Defendants' Exhibit S, for identification, by the reporter.)

Q. (By Mr. Haggerty, continuing) I hand you, marked for identification, Defendants' Exhibit S, and ask you to read it to yourself, please.

The Court: What happened to R?

Mr. Lipson: We have no R, either.

Mr. Haggerty: Thank you, your Honor, and the Reporter thanks you, too.

Q. (By Mr. Haggerty, continuing) You have read it?

A. I have, yes.

Mr. Haggerty: And I hand to counsel for examination. It is marked for identification Defendants' Exhibit S.

Mr. Lipson: I have no objection to this document, except that I would like to know, it is marked S, but is the document we were just discussing as R?

Mr. Haggerty: Yes, sir. I offer in evidence, may it please the Court, Defendants' Exhibit S.

[fol. 620] Mr. Lipson: No objection.

The Court: It may be received.

Q. (By Mr. Haggerty, continuing) Mr. Looker, you gave full cooperation with the Anti-Trust Section of the Department of Justice, did you not?

A. Yes.

Q. And you even went into personal effects of your late stepfather, did you not?

A. I believe at one time I referred to a telephone book that I had in my possession, yes, that belonged to Mr. Huck.

Q. Well, you will answer my question, then, will you, please? Did you go into the personal effects of your deceased stepfather?

A. Yes.

Q. Now, Defendants' Exhibit S reads——

(Reading):

"United States Department of Justice
"Washington, D.C.
"Mr. R. Looker
"President
"Brown-Line Corporation."

And the address, (reading):

"Dear Mr. Looker:"

The Court: The date?

Mr. Haggerty: October the 20th, 1960.

[fol. 621] Q. (By Mr. Haggerty, continuing and reading):

"The information contained in your letter of October 12, 1960, addressed to Mr. Lipson of my staff, will be quite useful.

"We note that the information was obtained from the personal effects of Mr. L. C. Huck. It would assist us to know the circumstances under which these papers came into your possession. In addition, it would be helpful if you would let us know whether or not you are related by blood or marriage to the late Mr. L. C. Huck or any of his relatives, or to any other persons who were at any time officers, stockholders or employees of the Huck Manufacturing Company. If so, the complete details of such relationship would be appreciated.

"Thank you for your cooperation.

"Robert A. Bicks."

(spelling) B-i-c-k-s.

(Reading and continuing):

"Assistant Attorney General
"Anti-Trust Division."

(Whereupon, a photostatic copy of a letter, dated October 24, 1960, was thereupon marked as Defendants' Exhibit R, for identification, by the reporter.)

[fol. 622] Q. (By Mr. Haggerty, continuing) I hand you Defendants' proposed Exhibit R, and ask you to read it to yourself.

A. (Witness complies.)

Q. You have read it?

A. I have, yes.

Mr. Haggerty: I hand to counsel for examination Defendants' proposed Exhibit R.

Mr. Lipson: Thank you.

Mr. Haggerty: I will tender in evidence, may it please the Court, Defendants' Exhibit R.

Mr. Lipson: No objection, your Honor.

The Court: It may be received.

Q. (By Mr. Haggerty, continuing) Dated October 24th, 1960, addressed to (reading):

"Mr. Robert A. Bicks
"Assistant Attorney General
"Anti-Trust Division
"United States Department of Justice
"Washington, D.C.,

"Gentlemen:

"In reply to your letter of October 20, 1960, Mr. L. C. Huck was my step-father, and upon his death, his personal possessions which were in his office at the time of his death, were given to his principal heir, my [fol. 623] mother, and his telephone notebooks from which the names given you were obtained were among such effects.

"If I can do anything further to be of assistance, please do not hesitate to advise.

"Sincerely yours, "Brown-Line Corporation, "R. Looker, "President."

Now, these names that you referred to were the names of individuals?

A. Yes.

Q. And they were individuals which, in your opinion, may have some connection with this litigation now before this Court and Jury?

A. Yes.

(Whereupon, a two-page photostatic copy of a letter, dated November 2, 1960, was thereupon marked as Defendants' Exhibit T, for identification, by the reporter.)

Q. (By Mr. Haggerty, continuing) I hand you Defendants' Exhibit T and ask you to read it to refresh your recollection.

A. (Witness complies.)

Q. Have you finished reading it?

A. I have, yes.

Mr. Haggerty: I hand to counsel for examination, marked for identification Defendants' Exhibit T.

[fol. 624] Mr. Lipson: Thank you. We have seen it.

Q. (By Mr. Haggerty, continuing) Does it refresh your recollection, as of November 2nd, 1960, that you wrote a letter to Mr. Robert A. Bicks, Assistant Attorney General?

A. It does, yes.

Q. Yes. And does it refresh your recollection, having read, marked for identification Defendants' Exhibit T, that you gave to the Government or furnished to the Government the name of Mr. George Q. Mathews?

A. It does, yes.

Q. And you told him he had resigned his position as vice president in charge of sales of Huck Company and has taken another sales management position in Southern California?

A. Yes.

Q. And did you also tell the Government in a letter that they could feel free—that they could feel free to call upon you or call upon us for any information within our knowledge.

A. Yes.

(Whereupon, a two-page photostatic copy of a letter, dated February 8, 1961, was marked as Defendants' Exhibit U, for identification, by the reporter.)

Q. (By Mr. Haggerty, continuing) I hand you Defendants' proposed Exhibit U and ask you if the photostatic copy of this is a copy of an original which you wrote and which bears your signature?

[fol. 625] A. May I read it?

Q. I'm not asking you to read it. I just asked you the question, by looking at the signature or the place for the signature——

A. (Interposing) I would assume that to be correct.

Mr. Haggerty: I hand to counsel for examination Defendants' Exhibit U, so marked for identification.

Mr. Lipson: Thank you.

Mr. Haggerty: I offer in evidence, may it please the Court, Defendants' Exhibit U.

Mr. Lipson: Your Honor, at this time we would like to object to that portion of the document that refers to a matter not even remotely connected with this case, solely on the grounds that it may conceivably prejudice the Government's action, if any is contemplated in the other matter.

I would rather not go into details, your Honor, but if you examine the document, I think you can understand what I am referring to.

Mr. Haggerty: I may say, may it please the Court, that it is offered to show the motive, the intent of this man, his attempt to curry favor and good will of the Department of Justice, which all goes to motive, and I think is highly pertinent to the issues here as to his credibility.

The Court: It may be received in its entirety.

Mr. Haggerty: Thank you.

Q. (By Mr. Haggerty, continuing)

[fol. 626] (Reading):

"February 8, 1961
"U.S. Department of Justice
"Washington, D.C.
"Attention: Mr. Robert A. Bicks
"Assistant Attorney General
"Anti-Trust Division.

"Gentlemen:

"I first would like to offer my congratulations to your department for the splendid work in breaking up the price-fixing conspiracy in the electrical industry as reported in the local press. It appears as though a most expert job was done, and I am certain that the remainder of the electrical industry, as well as the public, are most grateful.

"I have also to report an incident to you on an attempt to fix prices made to us by one of our competitors.

"About the middle of December, 1960, a Mr. Theodore Bassett, Sales Manager of the Aircraft Division of the General Logistics Division of the Aeroquip Corporation, made a luncheon date with our Sales Manager, Mr. George Christena, at "Robbs Steeple-
[fol. 627] chase" restaurant in El Segundo, and during such time Mr. Bassett proposed that General Logistics Company and Brown-Line Corporation enter into a price-fixing agreement covering aircraft seat fittings and cargo tie down fittings, both companies manufacture under Patent License from Pan American World Airways. He cited the present close price competition on such parts giving as an example seat fittings purchased by Hardman Tool and Engineering Corporation of Los Angeles. The price for such fittings at one time was between $12.00 and $20.00 each, and now with price competition is about $3.00. With price fixing in effect, Mr. Bassett indicated that we could both make a substantial profit in the buyer's of our parts could select their source on the engineering, quality, and service rather than price.

"Mr. Bassett further said that the General Manager of General Logistics, a Mr. Lloyd Jones, had already made such a proposal (or other like products) to a Mr. Frank L. Davis, President of Davis Aircraft Products, Inc., 1191-5 S Spoffard Avenue, New York 59, New York, and that such proposal was denied by Mr. Davis. He further believed that Mr. Jones also [fol. 628] called on the other member of our small industry, Eastern Rotocraft Corporation of Doylestown, Pennsylvania, with a similar proposal which was also denied.

"Mr. Jones was a Sales Manager, of the Aeroquip Corporation, of Jackson, Michigan, before being appointed General Manager of the General Logistics division. Mr. Bassett said that Mr. Jones had told him that such price fixing was in effect in the aircraft hose business (Aeroquip's principal business) and that it worked well there.

"Although Mr. Christena subsequently denied the request to enter into a price-fixing agreement, we felt that the entire story may be of interest to you, particularly the hearsay information that price-fixing is in effect in the aircraft (and missile) hose business which is a substantial industry. I have no personal knowledge of such a situation, but the Mr. Jones, Mr. Bassett authority should be considered good.

"Should you desire, Mr. Christena would be pleased to put the details of his meeting with Mr. Bassett in the form of an affidavit. Additionally, should you [fol. 629] wish us to cooperate in any specific way, please do not hesitate to so advise.

"On the Huck matter, we have been somewhat anxiously awaiting the report that action would be taken. We understand that these matters take time but if you will recall, we first called the Huck monopoly to your attention two and one-half years ago. As the violations of the law are in this case substantial and easily provable, we ask again that prompt action be taken.

"On Mr. Armour's attitude, it was reported to me by another not long ago that Mr. Armour has declared that he will fight his case 'if it takes my last cent',

that it was a matter of principle. If this proves to be true, your department may have a good court case to which to look forward, but in any event we ask for prompt and decisive action to free the lockbolt and blind rivet industry and users from illegal burdensome monopoly.

"Very sincerely yours, "Brown-Line Corporation,
"R. Looker, "President."

[fol. 630] (Whereupon, a photostatic copy of a letter, dated April 10, 1961, was marked as Defendants' Exhibit V, for identification by the reporter.)

Q. (By Mr. Haggerty, continuing) I hand you Defendants' proposed Exhibit V, and ask you, is it a photostatic copy of a copy of a letter which you wrote and signed the original?

A. Yes.

Mr. Haggerty: I hand to Government counsel for examination Defendants' proposed Exhibit V.

Mr. Lipson: We have examined the document.

Mr. Haggerty: I offer in evidence Defendants' proposed Exhibit V.

Mr. Lipson: No objections, your Honor.

The Court: It may be received.

Mr. Haggerty: May it be read, your Honor?.

The Court: All right.

Q. (By Mr. Haggerty, continuing) It is a letter (reading):

"April 10, 1961

"United States Department of Justice,
"Washington, D.C.

"Attention: Mr. Lee Loevinger,
"Assistant Attorney General
"Anti-Trust Division.

"Dear Mr. Loevinger?

[fol. 631] "Many thanks for your letter of April 4, 1961. You can expect to hear from Mr. Christena promptly.

"We were disappointed to hear that no action has been taken on the Huck matter. Our company and others have been victim to the harassments of an illegal patent monopoly and have provided substantial evidence to your department thoroughly indicating the needs for public action. Two and one-half years have passed since complaint against such illegal monopoly was made, and in the interim harassment continues and the statute of limitations runs out on offenses one by one.

"In our attempt to understand the reasons for delay in these matters, we have questioned those skilled in Anti-Trust litigation and have thus been led to understand that your department negotiates with offenders of the Anti-trust Statutes, and that this is the probable cause of the delay noted.

"As the matter is still with the Grand Jury in Detroit, unless you have further evidence for it, we respectively ask that it be asked for its decision. If it is the policy of your department to negotiate with, [fol. 632] or otherwise contain, offenders of the Anti-trust Statutes we request that we be so informed.

"Looking forward to the pleasure of hearing from you further in this matter, I remain,

"Very sincerely yours, "Brown-Line Corporation, "Robert Looker, "President."

(Whereupon, a two-page photostatic copy of a letter, dated July 26, 1961, was marked as Defendants' Exhibit W, for identification by the reporter.)

Q. (By Mr. Haggerty, continuing) I hand you Defendants' proposed Exhibit W, and ask you if it is a carbon copy of a letter, the original of which you signed?

A. It's not a carbon copy, photostat of a carbon copy.

Q. Photostat of a carbon copy, yes, sir.

A. Yes.

Mr. Haggerty: I hand to Government's counsel Defendants' Exhibit W.

Mr. Lipson: We have examined the document.

Mr. Haggerty: I offer in evidence, may it please the Court, Defendants' Exhibit W.

Mr. Lipson: No objections, your Honor.
The Court: It may be received.

[fol. 633] Q. (By Mr. Haggerty, continuing) Now, Defendants' Exhibit W, witness, bears date of July 26. We have read the Defendants' Exhibit U, which is dated February 8, '61, in which you request the Department of Justice for action; again, the defendants' Exhibit V, dated April 10th, in which you request the Government for action, and ask them certain questions about their method of handling their business; and then on July 26th, you write them another letter, and this is the letter——

(Reading):

"July 26, 1961 "Mr. Lee Loevinger • • •"

Is that name pronounced Levinger?
Mr. Lipson: Levinger, yes, sir.
Mr. Haggerty: Levinger.
Mr. Lipson: That's the correct pronunciation.

Q. (By Mr. Haggerty, continuing)

(Reading):

"Mr. Lee Loevinger, "Assistant Attorney General, "Anti-Trust Division. "U.S. Department of Justice, "Washington, D.C.

"Dear Mr. Loevinger?"

I have—the date is July 26th, '61, (reading):

"It has been sometime since I wrote you on the Huck Matter and since that time I have seen the Huck [fol. 634] patent attorney, Mr. John C. Sterritt, on several occasions, as I am involved in a patent office interference on Huck's behalf on an invention I made while employed by Huck, and have employment contractual obligations to Huck to assist in prosecution of patents made while in Huck's employ and thereby have assigned to Huck.

"At one time Mr. Sterritt told me that the investigations and hearings by your department had been costly to Huck (in what way I do not know) and that it was

Huck's opinion that our company, or myself in particular, had 'incited' your department into conducting the useless investigations and that unless indictments come from the Grand Jury in Detroit, Huck would take action either against Brown-Line Corporation or myself (Mr. Sterritt did not make this clear). Mr. Sterritt indicated to me that this was Mr. Armour's decision.

"Although we have been unable to collaborate having any liability * * * "

What do you mean by that?

A. I'm not certain what I meant by it. I believe probably that I meant that our attorneys——

[fol. 635] Q. (Interposing) It's there.

A. (Continuing)—have been unable to determine that we have a liability to Huck.

Q. (Reading):

"As you know, prices for lockbolt pins and collars were fixed in the Huck-Townsend Patent Agreement for a two-year period and extended by verbal agreement between Mr. Armour and Dickenson. The lockbolt collars also have very substantial use with unpatented lockbolt 'stumps' (later licensed also to Townsend by Huck on 'Know-how') and that this substantial supplementary application was known to both parties at the time prices were fixed.

"Assuming first that price fixing in a patent agreement is legal, the point of law which comes to mind is, is price fixing in a patent agreement for a part of the patented combination (collars) which has substantial unpatented use (with stumps and therefore by statute free of patent encumbrance) also legal.

"It would seem not to me, as it would then be legal to fix prices on, for example, all sales of a motor of a patented motor-pump combination in a patent license when the motor had substantial non-infringing use. [fol. 636] By this means prices could be legally fixed on almost any article of commerce and the only expedient would be to get such item included as part of a patented combination. An important point is that lockbolt pins and collars are sold separately, as are

lockbolt stumps and (at least for the airframe industry) the same collars are used on lockbolt pins and stumps. Additionally, most aircraft lockbolt users buy and use both pins and stumps and buy collars for both at one time, lockbolt parts generally considered 'open stock' materials, and that prices were fixed for the collars as well as the pins by agreement.

"I am quite certain that the point is well covered but in the event that it had not, I thought it well to bring up."

Now, with certainty, Mr. John Sterritt is a patent lawyer?

A. Yes.

Q. And he's associated with the firm of Harness, Dickey and Pierce?

A. Yes.

Q. And it was the patent law firm of Harness, Dickey and Pierce that did the patent work for Huck Manufacturing Company?

A. Yes.

Q. And most of that work was done—at least, contacts [fol. 637] with Huck, in your—to your knowledge, and the man in Harness, Dickey and Pierce that had that contact with Huck was Mr. John Sterritt?

A. Yes.

Q. Also, from time to time, is it within your knowledge that Mr. Dickey, of Harness, Dickey and Pierce—had something to do with the Huck business——

A. (Interposing) Yes.

Q. (Continuing)—patent business?

A. Yes.

Q. Now, is your recollection clear that at the time that the indictment was returned by the Grand Jury in this case at bar, which we are engaged in trying at the present time, the copy of the indictment was sent to you?

A. It was, yes.

Q. Had you requested it?

A. I had not.

Q. Was it explained to you, because of your great interest in this matter, they were sending you a copy of the indictment?

A. I don't recall the wording of the letter which was received with the copy of the indictment.

Q. Yes. Now, after the return of the indictment in this case, and after receipt of a copy of the indictment, you wrote a letter to Mr. Lipson, did you not?

[fol. 638] A. I don't specifically recall. Perhaps I did.

Q. Yes. And prior to writing that letter, you had some thought as to what your position would be as a Government witness in the event you were called by the Government in a criminal prosecution, such as we have here?

A. Very probably.

Q. Yes. And you started to think how you could show that you were not prejudiced against Huck; isn't that true?

A. I don't believe I had such concern. I may have.

Q. You may have?

A. Yes.

(Whereupon, a photostatic copy of a letter, dated October 27, 1961, was marked as Defendants' Exhibit X, for identification, by the reporter.)

Q. (By Mr. Haggerty, continuing) I hand you Defendants' proposed Exhibit X, and ask you, to your knowledge, is this a photostat of a carbon copy of an original letter that you signed?

A. That is correct, yes.

Mr. Haggerty: I hand to Government counsel for examination Defendants' proposed Exhibit X.

Mr. Lipson: I have examined the document.

Mr. Haggerty: May it please the Court, I offer in evidence Defendants' Exhibit X.

Mr. Lipson: No objection from the Government.

The Court: It may be received.

[fol. 639] Q. (By Mr. Haggerty, continuing) Reading it, it's a letter dated October 27, 1961, addressed to (Reading):

"Mr. J. L. Lipson
"U. S. Department of Justice
"Anti-Trust Division
"Washington 25, D.C.

"Dear Mr. Lipson:

"I have just read the indictment and civil complaint on the Huck matter, and it appears as though the

Grand Jury arrived at a reasonable decision. My congratulations to you and to those who assisted you in the preparation and presentation of the facts to the Grand Jury.

"In contemplating possible defense, if I am called upon to testify for the plaintiff, there could be likelihood of defense trying to show malice or prejudice in an attempt to discount any testimony I may be called upon to give."

Now, doesn't that refresh your recollection that on or about October 27, '61, you were thinking along the line of your status as a witness, having been active in filing the original complaint and furnishing the information to the Government? Didn't you question as to what your status as a witness would be?

A. Yes.

[fol. 640] Q. (Continuing and reading):

"In preparation you might keep in mind that it can be proved to the contrary, * * *"

And you offer 1, 2, and 3,

(Continuing reading):

"Recently, I testified freely as a friendly witness for Huck in a patent interference case with Olympic (see enclosed letter copies)."

That was testimony that you gave on an invention which was patented while you were at Huck?

A. For which an application was filed when I was with Huck, yes.

Q. Yes, yes.

A. Yes.

Q. And it was your original design?

A. That is correct, yes.

Q. Yes. And while you were at Huck and as an employee of Huck, all designs or all creations, inventions that you made, were the property of Huck; is that true?

A. That is correct, yes.

Q. As your employer?

A. Yes.

Q. Yes. And you testified in that case in behalf of Huck?

A. Yes.

Q. Based upon information and knowledge that you had obtained during the time that you were employed at Huck?

[fol. 641] . A. Yes.

Q. (Reading, continuing):

> "2. Where Brown-Line has had application for blind rivets or lockbolts or driving tool parts, I have personally insured that Huck parts were called out and procured from Huck despite the fact that in each case competitive devices were available and despite the fact that Huck has had in effect a policy of selling parts to Brown-Line only after the end use were clearly made known to Huck and Mr. Armour personally approved Huck's acceptance of Brown-Line orders on an individual basis. Procurement records are available here covering about four years procurement.
>
> "3. I have given Huck a full twenty per cent distributor discount on Brown-Line collar Splitters and spare parts purchased by Huck for resale purposes, shipping parts usually immediately and on open credit, despite Huck's refusal to negotiate a distributorship agreement."

A. Yes.

Q. Now, you wrote that letter to Mr. Lipson in mind, as you said, that it was thought by you there would be an [fols. 642-644] attempt to show your interest and motive and prejudice as a witness.

A. That is correct, yes.

Q. And you gave the suggestions to Mr. Lipson to counteract any such attempt being made?

A. That is correct.

(Whereupon, a communication was marked as Defendants' Exhibit No. Y, for identification, by the reporter.)

Q. (By Mr. Haggerty, continuing) I hand you, marked Defendants' Exhibit Y, for identification, and ask that you read it to refresh your recollection.

A. (Witness complies.)

Q. Have you read it?

A. I have, yes.

Q. Is it a copy of a copy of an original letter which you—or interdepartmental correspondence which you signed your name?

A. Yes.

. . . . . .

[fol. 645] ROBERT LOOKER, thereupon resumed the stand as a witness in behalf of the Government, and having been previously duly sworn to tell the truth, the whole truth, and nothing but the truth, testified further as follows:

Cross-examination. (Continued)

By Mr. Haggerty:

Q. Witness, I hand you, marked for identification Defendants' Exhibit Y, and I think that you have looked at it. This is a copy. And you did state, am I not correct, that this is a copy of an original of the letter which you signed?

A. Yes.

Mr. Haggerty: And Government counsel has had an opportunity to examine it, I believe, before recess.

Mr. Lipson: Yes, we have.

Mr. Haggerty: At this time, may it please the Court, I tender in evidence, Defendants' Exhibit Y.

Mr. Lipson: No objection, your Honor.

[fol. 646] The Court: It may be received.

Mr. Haggerty: May it be read to the jury, your Honor?

The Court: Yes.

Q. (By Mr. Haggerty, continuing) A letter on the stationery of the Huck Manufacturing Company, Departmental Correspondence, dated August 11, 1955, the subject is License.

(Reading):

It is to A. W. Armour, Copies to Benkert and Mathews, from R. Looker. Also there is written in longhand, underneath, Sterritt, and also in red, the word file, (spelling) f-i-l-e.

"As you know, George Mathews has just returned from a trip to Rockford, Illinois, where he called upon the Camcar Manufacturing Company in connection with our developing a good suitable second source for collar fabrication.

"Ray Carlson, their vice president, was a good friend of Lou Huck's, and I know that Mr. Huck always spoke very highly of Carlson. He made it known to George that he is very interested in any possibility which might exist insofar as the development of a CKL License might be concerned * * *"

What is a CKL License? What does a CKL License stand for?

[fol. 647] A. CKL refers to a blind rivet known as the Conical Keystone Lock Blind Rivet.

Q. (Continuing reading):

"* * * and I believe that in the Camcar Manufacturing Company we might have the combination of factors pointing a good licensee for the CKL Rivet. I realize that they are a comparatively small manufacturer in comparison to some of the larger people such as Elastic Stop Nut and Lamson & Session, but they are very highly thought of in the aircraft industry and have in operation a good aircraft sales force. In addition, they are thought of to be very high quality manufacturers and have a great deal of know-how which would be of invaluable aid to anyone who starts out with the Conical Keystone Rivet. With this in mind, I would like to suggest that possibly you and I travel to Rockford to examine their facilities and learn something about their company's operation with the possible thought in mind that they would be considered to be a suitable licensee for the CKL Rivet.

"I believe that we should also devote some thought to the consideration of Lamson & Sessions for a Lock-

[fol. 648] bolt License which would be limited specifically to a lockbolt suitable for structural attachment on heavy building structures.

"As you know, the so-called high tensile bolt is making very remarkable advances in replacing solid rivets for building construction and I believe that we can safely say that a lockbolt would be far preferable to the highly torque high tensile bolts which are now being used in very great tonnage for building construction.

"Although we may not be at liberty to grant such a license at this time, we will be in a little over a year from now and it would take at least that long to get suitable fasteners and tools developed for this market which could be handled by the Lamson & Sessions Company.

"Steel lockbolts of 5/8" and 3/4" diameter would be most generally used to replace the comparable diameter high tensile bolt and possibly this market would also demand a 1" diameter Huckbolt and maybe even up to 1 and 1/2" diameter.

"These suggestions are made with the thought in mind that our seventeen year lockbolt patent should be utilized as freely as prudent so that our total income from the patent can be a major factor in our business [fol. 649] without helping to cause any machinery which we own to sit idle. Considering Lamson & Sessions as a licensee for a high tensile Huckbolt to take the place of high tensile bolts in building construction work, would we believe, serve this purpose, and they are, I believe quite anxious to enter into the market.

"Very sincerely yours, R. Looker."

(Whereupon, a print was marked as Defendants' Exhibit Z, for identification, by the reporter.)

Q. (By Mr. Haggerty, continuing) I hand you for your examination and inspection Defendants' proposed Exhibit Z, and ask that you examine it. Have you ever seen it before?

A. Yes, I have.

(Whereupon, a letter, dated October 19, 1954, was marked as Defendants' Exhibit AA, for identification, by the reporter.)

Q. (By Mr. Haggerty, continuing) I hand you defendants' proposed Exhibit, marked for purposes of identification as AA, and ask you if that bears your signature?

A. It does.

Mr. Haggerty: I hand to Government counsel for inspection Exhibits marked for identification Z and AA, re-
[fol. 650] spectively.

Mr. Lipson: We have examined them.

Mr. Haggerty: At this time, may it please the Court, I offer in evidence Defendants' Exhibit Z and AA.

Mr. Lipson: We have no objection to either Exhibit.

The Court: They both may be received.

Q. (By Mr. Haggerty, continuing) Referring to the Exhibit Z, witness—that's a little clumsy to handle—it bears the name of Sam Egnot (spelling), E-g-n-o-t, with the date 10-8-1954, does it not?

A. Yes, it does.

Q. Who is Sam Egnot?

A. He is a former employee of Huck Manufacturing Company.

Q. And is this drawing the product of Sam Egnot?

A. Yes.

Q. And I notice that as a witness there is the name—a witness, R. Looker, and the date is 10-18-54, right?

A. Yes.

Q. And beneath this is Frank—is the initial A, Frank A. Dobbe?

A. Yes.

Q. And the date, 10-18-54?

A. Yes.

Q. Now, isn't it a fact that that indicates that that draw-
[fol. 651] ing, as of that date, was signed by yourself, as a witness, and Frank A. Dobbe, as a witness, as a witness to the fact that it was presented to you by Egnot on that date?

A. Yes.

Q. And this device, which is on Defendants' Exhibit Z, is a lockbolt——

A. (Interposing) Yes.

Q. (Continuing) —of some kind?

A. Yes.

Q. Right?

A. Yes.

Q. Now, upon receipt of this drawing, you sent this lockbolt, or this drawing, rather, to Mr. Sterritt, the patent counsel for Huck Company, did you not?

A. Very likely.

Q. And Defendants' Exhibit AA is on the stationery of Huck Manufacturing Company, and it is dated October 18, 1954, addressed to John C. Sterritt, of Harness, Dickey, and Pierce.

(Reading):

"Dear John:

"Attached to this letter you will find a drawing made by a man in our Field Engineering Department, Mr. Sam Egnot, showing a possible Huckbolt variation which may have a very substantial commercial value and which should be considered to be held until we [fol. 652] see if it works. The substance of the invention is shown as follows:

"In much commercial work it is necessary to have a comparatively wide grip range . . ."

Now, what is a grip range on a lockbolt?

Would either of these lockbolts here (indicating) show what a grip range is?

A. It would tend to show it, yes.

Q. Well, let's take either one or both of them. Would you demonstrate what the grip lengths are on both of them? Can everybody see? I am in the way, I guess.

A. On this lockbolt, the grip is the material to be fastened together, represented by the length of the smooth, unrolled shank, plus, in the case of this flush headpart, the height of the head.

Now, a grip range is an acceptable variation from a—a normal or nominal amount that any one part can successfully be utilized for attachment purposes.

Q. And the portion of the grip range severed from the Huckbolt at the time it's set—at the time its set?

A. No.

Q. In other words, is any portion of that Huckbolt that you have in your hand taken off?

[fol. 653] A. Yes.

Q. After it's set?

A. A part is taken off.

Q. Now, which part is taken off? Would you show us?

A. Yes, the part from the deep groove where my finger points (indicating), to the top.

Q. And what would you call that? Would you call that a grip range?

A. No.

Q. What would you call that? What would you call that?

A. A pin tail.

Q. A pin tail.

(Reading, continuing):

"* * * it is not necessary to have a substantial portion of the Huckbolt shank bearing against the walls of the hole. We, therefore, can make a Huckbolt having only locking grooves with no pull grooves, no shank or very little shank, and no breakneck. Such a Huckbolt would have the advantage of having an unlimited grip range being installable if the pin were long enough to reach the jaws of the tool."

What do you mean by that? Would you like to demonstrate that with the lockbolt?

A. No, I don't believe I need it.

[fol. 654] Q. All right.

A. The lockbolt that Egnot had presented was of such nature that it did not have an unrolled, unthreaded shank portion which would normally be adjacent to the material to be attached together. It had a continuous section of grooves. It had, therefore, no physical limitation to the material thickness to be attached, with the exception that the part must be long enough to reach the jaws or motivating portion of the drive tool.

Q. (Reading, continuing):

"Egnot's drawing attached shows a device for cutting off the pin, after the fastener has been swaged you will note that the small collar labeled 'A' bears against the top of the collar at final swage, forcing the section

'B' against the pin. We know that if a piece of material is pulled in tension and there is substantial compression at a point the pin will break at that point because of interaction of forces there. The device shown is not necessarily one which will be the final answer for the forces could be transmitted to compression section 'B' either by the anvil bearing against the top of the collar or by the anvil forces available if the anvil touches the sheet through some mechanical link-[fol. 655] age to the compression section."

Now, let's refer to this drawing. Mr. Dickey, would you help me hold this, please? Let's see. We have got to move around here. You have a big court room, your Honor, but we are crowded.

At the top of the drawing is what; what does that depict? Can you see it from there?

A. Yes, yes, I can. A representation of the jaw section referred to.

Q. And where is the head of the rivet?

A. At the bottom.

Q. At the bottom of the drawing. Now, this portion that I'm indicating here, (indicating)—that runs from the top up to the—from the bottom up to the top of the drawing is what? Is that the lockbolt itself?

A. Lockbolt pin, yes.

Q. Lockbolt pin. And what is this; what do these edges around here (indicating) depict?

A. Those are grooves formed on the lockbolt pin.

Q. Yes. Now, what are these pink things, A and B, here (indicating)?

A. Those are—that's the tool section which was designed for cutting off the lockbolt pin at the top of the collar.

Q. In other words, the lockbolt pin would be cut off where [fol. 656] this tool was applied?

A. Yes.

Q. Yes. And where is the collar? Is the collar shown on here?

A. It is, yes.

Q. Where is the collar? Will you just step down a minute and indicate?

A. The collar is the shaded portion.

Q. The shaded portion in the middle, the wide portion; is that right?

A. Yes, it is.

Q. Now, what difference was this—what difference is there in this drawing—may I have one of those lockbolts, please—between this proposed lockbolt and the ordinary lockbolt such as displayed by Exhibit 5?

A. There's no shank portion and there is no breakneck portion and the grooves are uniform.

Q. You mean, on the drawing there is no shank portion?

A. Or if there is, there's a very short one. I see a short shank portion.

Q. All right. And the grooves are different?

A. Appear to be, yes.

Q. In other words, then, on a lockbolt there is one groove at which place it's supposed to break; isn't that true?

A. Yes.

Q. And that's not true here?

[fol. 657] A. That is correct.

Q. But in order to break off the tail—the pin tail, is that what it's called?

A. Yes.

Q. In order to break off the pin tail, then, this tool is applied and applies forces and is it twisted?

A. No.

Q. By compression, then, that would—it's supposed to break off, is that true?

A. Cut it off.

Q. Cut it off?

A. Yes.

Q. With a tool?

A. Yes.

Q. Yes. Now, this happened back in October, 1954?

A. Yes.

Q. Did you file a patent application on a commercial lockbolt wherein it was similar in appearance to the proposed lockbolt on the drawing?

A. Yes.

Q. And you filed a patent application and obtained a patent?

A. That is correct.

Q. Now, you filed an affidavit in your patent application, right?

A. Yes.

Q. And amongst the things that you swore to was that, as [fol. 658] far as you know, there was no prior art?

A. Yes.

Q. And by prior art, we mean what?

A. Teaching which would pre-empt the possibility of invention.

Q. You had, however—and when did you file that patent application, your best recollection?

A. Oh, somewhere around '57, '58.

Q. Yes. You had, however, seen the Egnot drawing back in October 18, 1954?

A. Yes.

Q. Now, it was that commercial lockbolt that you patented that you attempted to license to the Illinois Tool Company; isn't that right?

A. Yes.

Q. And, likewise, you attempted to license it to this British concern, Aviation something Limited?

A. Yes.

Q. What is its full name?

A. I believe it's Aviation Developments Limited.

Q. It is also true you attempted to license it to Huck, did you not?

A. Yes.

Q. And you had correspondence in reference to licensing it with Huck?

A. Yes.

[fol. 659] Q. And you sent Huck your drawings before the patent had been issued, did you not?

A. Yes.

Q. And Huck told you that they would not accept your drawings in confidence?

A. I believe they did, yes.

Q. Yes. And you wrote Huck by return mail or shortly thereafter and told them it wasn't meant to be in confidence; is that right?

A. I don't recall. I don't recall that, but it's very likely.

Q. Yes. Now, in your patent application, you swore that you were the sole and original inventor?

A. Yes.

Q. And you also swore that you hadn't received ideas from any other source by prior art or invention?

A. I assumed that to be correct. I don't remember what the wording of the document was that I signed.

Q. Now, when you disclosed your drawing to Huck, you received a letter, did you not, that—to the effect of the Egnot disclosure?

A. Yes.

(Whereupon, a letter date June 2, 1961, was marked as Defendants' Exhibit BB for identification by the reporter.)

Q. (By Mr. Haggerty, continuing). I hand you Defendants' proposed Exhibit BB and ask you if it bears your signature?

[fol. 660] A. It does.

Mr. Haggerty: I hand to counsel for examination Defendants proposed Exhibit BB.

Mr. Lipson: We have examined the document.

Mr. Haggerty: I offer in evidence, may it please the Court, Defendants' Exhibit BB.

Mr. Lipson: Be pleased to have it in evidence, your Honor.

The Court: It may be received.

Mr. Haggerty: That is the first time we note the Government is pleased, your Honor.

Q. (By Mr. Haggerty, continuing) On the stationery of Brown-Line Corporation to (reading):

"Mr. John Sterritt
"Harness, Dickey & Pierce • • •"

The Court: What is the date?

Q. (By Mr. Haggerty, continuing and reading):

"7-141 General Motors Building
"Detroit, Michigan."

It is dated June 2, 1961,

(Reading):

"Dear John:

"Recalling our conversation at dinner, I would like to check out the Egnot disclosure to see if it anticipated [fol. 661] our patent 2,978,946 (which incidentally is awaiting proofing). If it does, I would like to know it before we proceed with licensing and/or marketing plans.

"Incidentally, I have heard third hand that Huck has claimed to Butler that Looker's lockbolt comes within Huck's lockbolt claims.' This I don't get as nothing has been done to even develop the invention as yet, let alone market it.

"Perhaps you can't answer the Butler thing (although I wish you would) but the Egnot disclosure should be sent, or we will have to assume that Huck has changed its mind and have decided that they were in error, and that the Egnot disclosure does not anticipate our patent 2,978,946.

"My memory of the disclosure is a little hazy."

And by the disclosure, you mean, the drawing, the exhibit? Is that true?

A. Yes.

Q. (Reading, continuing):

"My memory of the disclosure is a little hazy. I recall the large drawing with different colors on it [fol. 662] and recall witnessing it. In fact, it was drawn at my request so that we would have a defendable disclosure in the event we wanted to file on it. Otherwise, my memory needs refreshment.

"Your help in settling this will be appreciated. If we have issued an invalid patent, we want the patent office to revoke it, and if we have a valid patent, we want to get the product going."

Did you ever get the product going?

A. No.

(Whereupon, a document was marked as Defendants' Exhibit CC, for identification, by the reporter.)

Q. (By Mr. Haggerty, continuing) I hand you Defendants' proposed Exhibit CC and ask you what it is?

A. Copy of a patent, 2,978,946.

Q. And is that the commercial lockbolt patent we are discussing?

A. It is, yes.

Q. And does it truly depict from the drawings on the first page the lockbolt, the commercial lockbolt on which you applied for a patent?

A. Drawings on the first four pages.

Q. The first four pages complete?

A. Yes.

Q. But on page one, the first two drawings, are the lock-
[fol. 663] bolts in appearance similar to these lockbolts (indicating), the Government Exhibits 5 and 4?

A. No.

Q. Well, they—the first two figures on this drawing, Defendants' Exhibit CC, are drawings of lockbolts without any encumbrances, without any tools applied, without them drawing any material together; isn't that true?

Mr. Lipson: Your Honor, if we are going to have testimony on the document, I would like to have it in evidence and have an opportunity of examining it.

Mr. Haggerty: Well, I want to establish it first.

The Court: Perhaps you better.

A. Would you repeat the question, please?

Q. (By Mr. Haggerty, continuing) Isn't it true that the first two figures on the first page of Defendants' Exhibit CC are the pictures of lockbolts without any tools applied thereto or without them showing the operation of the lockbolt?

A. They're pictures of lockbolt pins.

Q. Of lockbolt pins?

A. Yes.

Q. Yes.

A. Such as disclosed by the patent shown.

Mr. Haggerty: I hand to counsel for examination the Defendants' Exhibit, proposed Exhibit CC.

Mr. Lipson: May I ask at this time whether the entire—

[fol. 664] whether you propose to introduce the entire exhibit?

Mr. Haggerty: All I care about are the drawings. The other may be excluded, but they're attached together.

Mr. Lipson: Your Honor, the Government makes no claim in this case of being a patent lawyer, but we have an impression that the text material is an intrinsic part of the drawings.

Mr. Haggerty: All right, then, we offer—

Mr. Lipson: (Interposing) I prefer that it all go in together for the sake of completeness.

Mr. Haggerty: We will offer it all.

The Court: It may be received.

Mr. Haggerty: Then, may it please the court, may I at this time hand to the Jury for examination and inspection the exhibit Z and CC for comparison as to the drawing and the lockbolt pin?

The Court: You may.

Mr. Haggerty: Sorry to have to give you something so clumsy.

(Whereupon, Defendants' Exhibits Z and CC were given to the Jury for its inspection.)

Mr. Haggerty: May we wait until the Jury has inspected the document, your Honor?

The Court: All right.

[fol. 665] Do you have some additional exhibits that you are going to introduce following these?

Mr. Haggerty: No, your Honor.

The Court: This is it?

Mr. Haggerty: This is the end of my exhibits.

The Court: Just examine them, don't carry on a conversation about them.

Q. (By Mr. Haggerty, continuing) Do you recall of your own memory the dates of the indictment of the Grand Jury was returned in this case?

A. No.

Q. If it were suggested to you that it was in October, '62, would that refresh your recollection?

A. No.

Q. As a matter of fact, it was returned October the 24th—

Mr. Lipson: (Interposing) I object to that, your Honor. That is misleading. It was not returned——

Mr. Haggerty: (Interposing) Wait, wait. I haven't finished my question.

The Court: All right, let's here it.

Q. (By Mr. Haggerty, continuing) 1961, was it not?

A. I don't recall the date that the indictment in this case was returned.

Mr. Haggerty: All right, can we agree, Mr. Lipson, on the date?

[fol. 666] Mr. Lipson: I'm perfectly agreeable to that date, 1961.

Mr. Haggerty: Yes, October 24, 1961.

Mr. Lipson: Yes.

Q. (By Mr. Haggerty, continuing) Now, after the indictment was returned, you caused, or the Brown-Line caused to be instituted in the United States District Court for the Southern District of California a civil action against the Huck Manufacturing Company, a corporation, and the Townsend Company, a corporation; isn't that true?

A. Yes.

Q. And you had mentioned in your letter to Mr. Huck, where you set forth the four alternatives, in addition——

The Court: You do not mean Mr. Huck.

Q. (By Mr. Haggerty, continuing) I mean, to Mr. Armour—we'll leave the dead undisturbed, your Honor—Mr. Armour, you had given him four alternatives, one was you were going to contact the Anti-trust division, which you did; the second one of the other alternatives was that you were going to institute a suit for damages?

A. Yes.

Q. Now, this is the suit for damages that you instituted and you instituted it October the 31st, 1962, didn't you?

A. May I clarify my last answer? The second alternative presented to Mr. Armour that we would file suit for a declaratory judgment, not damages.

[fol. 667] Q. Did you, at any time, ask for damages? Did you mention damages for declaratory judgement in damages in that letter?

A. I may have. I don't recall the wording of the paragraph.

Q. But you did, in this suit that was instituted October the 31st, '62, ask for damages, did you not?

A. Yes.

Q. And you had asked for damages in the amount of $1,200,000 didn't you?

A. Yes.

Q. Now, that suit is pending in the Southern District of California at the present time?

A. Yes.

Q. Now, is it a fact, witness, that the institution of this suit is the completion of what you started out to do—namely, to be in a position to sue Huck and possibly Townsend for a large sum of money with the hopes of recovering it?

A. No.

Q. Isn't it a fact that you hoped to recover $1,200,000 worth of damages in this suit?

A. Yes.

Q. That you have pending?

A. Yes.

Q. Yes, you do hope to recover that?

A. Yes.

[fol. 668] Q. And you hope to recover that as a reward for the service that you have rendered in this matter, and the work that you have had with it?

A. No.

Q. If you thought that you had a cause of action prior to October the 24th, 1961, why didn't you then instruct your attorneys to bring a civil suit for damages?

A. A very good reason. We couldn't afford it.

Q. You couldn't afford it?

A. No.

Q. Now, at the—has the stock of Brown-Line increased and enhanced in value and have their profits increased, whereby they can now afford a case?

A. We feel now that we can afford a low-cost case, so to speak, if we have a prima facie case.

Q. I see. It is your thought that the Government has done some work which you will take advantage of; is that right?

A. It is our consideration that we will—or have sued for damages as permitted by law.

Q. In other words, if the verdict of the jury in this case against Huck and against Townsend was found to be guilty as charged, you would, then, in your civil case, where you ask a million, two hundred thousand dollars' damages, have a prima facie case against Huck and Townsend? That's your attitude?

[fol. 669] A. That's not my understanding. My understanding is that the civil judgment reads on treble damages, but the criminal judgment does not.

Q. But you would have a prima facie case; is that it?

A. If the civil case goes against the Company, the Huck Company, I understand that, and Townsend, yes, but not in this case. Now, this is my understanding of the law and I am not competent to —

Q. (Interposing). However, it is your—within your knowledge that the proofs in the civil case would be similar to the proofs in this case; isn't that true?

A. This would be an assumption on my part.

Q. Well, what is your assumption?

A. My assumption that the cases are similar, yes.

Q. Yes.

A. But I don't know the point of law relative to either one.

Q. So if the Government would establish in this civil case its claim and win a favorable decision, then, as far as your personal or the Brown-Line case in Southern California in the District Court is concerned, you would have a prima facie case—

A. (Interposing) Yes.

Q. (Continuing)—is that right?

A. Yes, it is.

Mr. Haggerty: No further questions.

[fol. 670] The Court: Mr. Pomeroy?

Mr. Pomeroy: I have relatively few questions, your Honor, of a supplementary nature, shall we say.

The Court: This would be a good time to take a recess.

(Whereupon, a short recess was taken.)

[fol. 671] AFTER RECESS

ROBERT LOOKER, a witness called on behalf of the Government, having been previously duly sworn, resumed the witness stand and testified further upon his oath, as follows:

Cross-examination.

By Mr. Pomeroy:

Q. Mr. Looker, I would like to ask you a few questions, going back to the beginning of your testimony, just to fill in a few blank spots of my memory, or notes.

How old were you when you were first employed by the Huck Manufacturing Company?

A. Twenty-five.

Q. That was in 1947?

A. Yes.

Q. And you left their employment in 1956, or nine years later?

A. Yes.

Q. So that that made you thirty-four when you left the employment of Huck, is that right?

A. Yes.

Q. Do I understand correctly that you immediately thereafter became president of the Brown-Line Corporation?

[fol. 672] A. Yes.

Q. And that you are still president of Brown-Line Corporation?

A. Yes.

Q. And am I also correct in understanding that you have an ownership in that company; own stock in it?

A. Yes, I do.

Q. And I believe you also mentioned a Mr. Miner as being another officer and owner of Brown-Line Corporation, is that right?

A. Yes, it is.

Q. And Mr. Miner, was, I believe, formerly a Huck employee also, is that true?

A. I think more accurately a Huck contract agent.

Q. A Huck contract agent?

A. Yes.

Q. What was his title?

A. He was—He was the president of Miner and Associates, Incorporated, which company represented the Huck Company by contract.

Q. Where did they represent the Huck Company?

A. In the western states of this country, in a sales capacity. He had *have* a title as west coast district manager.

Q. He had a title with the Huck organization?

A. Yes, I believe that is correct.

Q. Are you saying he was not on their salary payroll, however?

A. Yes, I am saying that. He was not considered a Huck [fol. 673] employee; he was considered a Huck contract agent.

Q. When did he cease being a contract agent for Huck?

A. As I understand it, sometime in the spring of 1957.

Q. Some months after you left Huck's employment?

A. Yes.

Q. What is his title with the Brown-Line Company?

A. Vice president.

Q. And was he an officer from the—excuse me—an officer from the beginning of the operations of Brown-Line?

Well, put it another way: was he an officer the same time that you became an officer of the Brown-Line?

A. I am not sure of that. I don't know.

Q. In other words, you are saying that he may have been an officer before you became associated with Brown-Line?

A. No. I am—I don't mean that. I believe that possibly he became an officer after he left Huck.

Q. I see.

A. That is my present recollection, although it may not be very accurate.

Q. Did he have an ownership interest in Brown-Line before he left Huck?

A. Yes, he did.

Q. Did have *have* an ownership interest in Brown-Line at the time that you left Huck to become president of Brown-Line?

[fol. 674] A. Yes, he did.

Q. Mr. Looker, you have testified the first morning, I believe, that you had prepared these exhibits—these sketches, Exhibits 6, 7 and 8, in response to the subpoena?

A. Yes.

Q. Served on you in this case. And you also testified, I believe, that you had prepared them on the day before the trial commenced?

A. Yes.

Q. That would be on Monday, a week ago?

A. Monday, the 25th, yes.

Q. Yes.

A. That is one date I am sure of.

Q. When was this subpoena served on you, Mr. Looker?

A. I don't recall. It was some weeks prior to that date.

Q. And did it instruct you to prepare these drawings, is that what I understood?

A. Yes, it did, and present them and have them available for presentation in court.

Q. The subpoena spoke in terms of drawings that were not then in existence, but what you were then to prepare, is that right?

A. My understanding of it, yes.

Q. Did the subpoena also ask you to bring in the lockbolts which are in evidence, Exhibits 4 and 5?

[fol. 675] A. Yes, they did.

Q. And 6 and 7?

A. I don't know the numbers on them. The two that are on the table are the ones that I delivered in response to the subpoena.

Q. These two which I am now holding are Exhibits 4 and 5?

A. Yes.

Q. These were produced in response to the subpoena?

A. Yes.

Q. And what about the ones that show the material?

A. I didn't bring those.

Q. To be joined together?

A. I didn't bring those with me.

Q. Six and Seven, you did not bring these with you?

A. No.

Q. Where did Exhibits 4 and 5 come from, in other words, two lockbolts?

A. The upper righthand drawer of my desk.

Q. Are they Huck Lockbolts?

A. I assume so, yes.

Q. When did Huck first start to produce this product? I think you testified to that.

A. I believe in 1947.

Q. And am I also correct in my recollection that Mr. Lou Huck, your stepfather was the inventor of this product?

[fol. 676] A. Yes.

Q. And he is the one that procured the patents covering lockbolts, is that right?

A. Yes.

Q. Do you remember when those patents issued?

A. No.

Q. Does 1950 sound like a good year for that?

A. It might have been.

Q. You have no independent recollection?

A. I do not, no.

Q. I think you have already testified that the life of the patent, under the United States Patent laws is seventeen years?

A. Yes.

Q. Do you remember when the patents on those lockbolts was to expire?

A. My recollection in the matter is that there are four patents involved. One, I believe, had expired, although I am not sure of that. Two, to the best of my recollection issued sometime in 1951, perhaps; within a year either way, and that one issued sometime in 1955, plus or minus a year.

Q. So that of the several patents involved they were not all issued at the exact same time, would you say?

A. That's correct, yes.

[fol. 677] Q. And would have different expiration dates?

A. Yes.

Q. It is true, is it not that during the lives of the patents, or the life of any patent, the patentee, the patent owner has what is called a patent monopoly to manufacture, use and sell the product covered by the license by the patent?

A. That is my understanding and conclusion. I really am not competent to answer the question.

Q. You were in charge of the patent affairs of the Huck Manufacturing company after Mr. Huck died, were you not?

A. Yes, I was.

Q. This patent monopoly I referred to, would be true, would it not as long as no other licenses were granted under the patent?

A. My understanding of what constitutes the legal definition of a patent monopoly is just not competent, sir.

Q. Isn't this true, Mr. Looker, that when these patents were issued to the Huck Manufacturing Company, and assuming that it licensed no one thereunder for any purpose, that it exclusively had the right to make, use and sell those products?

A. That is my understanding of the law, yes.

Q. And that as soon as it licensed anyone, either to make or use or to sell, or any combination of these, it then was not the exclusive—it had given up some of the exclusive rights that it previously enjoyed?

[fol. 678] A. Yes.

Q. Isn't that so?

A. Yes.

Q. Now during the period from the issuance of these patents, whatever the dates—let's assume 1950 might be a date for one or more of them, and until the license to Townsend in this case in 1954, had there been any other licenses issued by Huck relative to lockbolts?

A. I lost the question somewhere, could we have it repeated, please, sir?

Mr. Pomeroy: Would you read it back, please.

(Whereupon the pending question was repeated by the Reporter.)

A. Not to my knowledge.

Q. (By Mr. Pomeroy) You would know if there had been, wouldn't you?

A. I would assume that, yes.

Q. As a matter of fact, Huck had been reluctant to issue any licenses during this period, had it not?

A. Some extent, possibly. The incident previously testified to, in 1951, I believe, where we did discuss this matter with the Townsend Company, Huck exhibited its reluctance to negotiate after—only after the Townsend Company didn't indicate a particular willingness to negotiate on favorable terms to Huck. It was somewhat reluctant, I be-

[fol. 679] lieve to issue a patent license before that date, however.

Q. As a matter of fact you testified earlier, did you not, that were Huck to grant a license to Townsend, as Townsend requested, or anyone else, for that matter, this would

involved the losing of some of Huck's customers in all likelihood?

A. Yes.

Q. Or at least some of the business that various of the customers had previously directed solely towards Huck?

A. Yes.

Q. Speaking of customers, Mr. Looker, you mentioned a few of the more prominent ones in your direct testimony, among them was the Republic Aviation Company, I believe?

A. Yes.

Q. Are you able to state whether Republic Aviation Company continued as a customer of lockbolts?

A. I am not able to say.

Q. Do you know whether they did or did not continue as a customer?

A. I don't know whether they did or not, no. I do know we had them well sold at one time.

Q. You don't recall if they got unsold?

A. They may have.

Q. In 1955 and '6?

A. They may have.

Q. You don't remember that?

[fol. 680] A. I don't recall that, no.

Q. Would you say that they were customers of Huck's when you left the employment of Huck?

A. I don't know whether they were or not.

Q. Well you did classify them as a prominent customer, didn't you?

A. At one time they did buy a good many lockbolts. Now whether they continued to buy them, I don't know. I do know that we had a very difficult time establishing them as a customer, and it is one that stuck in my memory for that reason, because I worked on it personally.

Q. But you don't remember that they did not become—did not remain a customer?

A. I don't recall that.

Q. What about the North American Aircraft Company, Mr. Looker, was it a customer of lockbolts; of Huck for lockbolts?

A. I don't believe so, no. No.

Q. To your knowledge, has North American ever used lockbolts in the manufacture of its aircraft?

A. I think they used a few, but I am not real sure of that. They used a few blind lockbolts, but I don't know that—if they used any lockbolts it was very few, during my period of employment.

Q. Right. You mentioned in direct testimony the—as one reason for the grant of the license to Townsend by [fol. 681] Huck, the demand for a second source of lockbolts?

A. Yes.

Q. And you mentioned that Douglas Aircraft Company particularly had made such a request for a demand upon Huck?

A. Yes.

Q. Douglas was one of Huck's prominent customers, was it not?

A. Yes, it was.

Q. Did such a demand come from any other aircraft manufacturer?

A. I don't believe so, no.

Q. Just from the Douglas Company?

A. That's the only one I recall.

Q. You wouldn't say that it was the only one, necessarily, would you.

A. No, I would not.

Q. Would you tell us again, Mr. Looker, if you did tell us once, what a second source means or meant to you in 1954, when this request was made?

A. Means that there are two independent companies producing a like product, giving the purchaser the option of buying from either one or the other.

Q. You say a "like product." By that do you mean an identical product?

A. Substitutible product doesn't have to be completely identical if one can be substituted freely for the other.

Q. As a matter of fact, wouldn't they have to be identical [fol. 682] to all intents and purposes if they were to be freely substitutible; completely substitutible?

A. Yes, sir. There could be minor differences. I don't want to belabor the point, it isn't particularly important, I don't think. I know that exactly like products are more easily substitutible, however, there are many aircraft bolts which are freely substituted one for the other and they are not exactly alike.

Q. But this request—this particular request for a second source of lockbolts in effect meant we want someone else besides Huck to make lockbolts?

A. Yes.

Q. Did it not?

A. Yes.

Q. And lockbolts was a specific and peculiar and identifiable product, isn't that correct?

A. Correct.

Q. The purpose, as I believe you mentioned, was to make sure that the same product could be readily available to a manufacturer in the event of something happening to the Huck Company, which would prevent its supplying the demand?

A. That was one of the purposes, yes.

Q. Yes. You mentioned at some point in your testimony about this subject, Mr. Looker, that this was a highly competitive market?

[fol. 683] A. That—Excuse me. What was a highly competitive market?

Q. That's what I was going to ask you. Did you mean the fastening industry?

A. I don't know what the question refers to.

Q. Relative to aircraft?

A. I don't know what the questions refers to, sir.

The Court: In your testimony on direct you—In direct testimony you said it was a highly competitive industry. Now I think counsel wants you to explain why it was competitive.

A. What was a highly competitive industry?

The Court: Lockbolts.

Mr. Lipson: Your Honor, if we could have the context of that statement, it might help to narrow the area we are inquiring into.

Q. (By Mr. Pomeroy) Mr. Looker, you were directing your remarks particularly to the labor situation at the time—this appears on page 513 of the record, and there you stated in answer to a question by Mr. Haggerty: "The existence of a second source for fabrication of lockbolts at the time appeared to me to be a deterrent to the strong position which the unions held in that did such a strike

occur, the customers of the company would have someplace else to go and therefore the company might stand the chance of losing those customers, while with a single source, the [fol. 684] customers had no other place "to go. * *

"In a highly competitive market, my opinion at that time, as I recall, was that unions do not have such a strong position in negotiating because of the threat of loss of business of the company and employment in their ranks."

Now what did you mean by the phrase highly competitive market, that was my question?

A. I was referring to any industry which is highly competitive; under those circumstances the unions do not enjoy that power on sole source products. I wasn't referring to any specific industry at that time.

Q. You were not referring to any specific industry at all?

A. No.

Q. You weren't referring to the metal fastener industry as applied to the manufacture of airplanes, for example?

A. I was drawing an analogy only and I was not referring to any specific industry. I was drawing an analogy to the fastener industry.

Q. Were you not referring to the anticipated relationship of Huck Manufacturing Company and Townsend Company as a result of the giving of this license?

A. Yes, I was. But the competitive industry I was referring to was only an analogy, that the establishment of a second source would tend to make it more competitive, therefore, with the analogy, and that the position of labor [fol. 685] negotiations would therefore be alleviated.

Q. What is the—What was the industry that you were referring to?

A. The competitive industry?

Q. Yes.

A. I had no specific industry in mind.

Q. You had no industry in mind?

A. No.

Q. Were you—You might have been referring to the fastener industry, might you not?

A. When I made the statement, I had no specific industry in mind. I was merely drawing an analogy, sir.

Q. Right. But you could have been referring, as I say, to the fastener industry, could you not?

A. If the fastener industry or that segment of it, that the reference was made is a highly—is or was a highly competitive industry, the solid rivet business is a highly competitive industry, and the analogy could have been made to that portion—facet of the industry, yes.

Q. The lockbolts as then manufactured by Huck Manufacturing Company compete with any other fasteners?

A. Yes, and no.

Q. That is a good lawyer-like answer, Mr. Looker.

A. I can't answer it any other way. I have been asked that question several times, and there is just no other answer.

Q. Well now, you did ultimately—"you", meaning Huck Manufacturing.

[fol. 686] Q. Well, now, you did ultimately—"you", I mean Huck Manufacturing Company ultimately concluded a license with Townsend—certain parts of this has been read by you into the record heretofore, but only those bits and pieces of it. I would like you to refer to Exhibit 17, if you will, so that I can ask you a few supplementary questions.

You have read paragraph one of Exhibit 17, which is the granting clause, whereby Huck grants to Townsend a non-exclusive license to make, use and sell lockbolts.

Paragraph two refers to the consideration or money which Townsend should pay for this privilege, does it not?

A. Yes, it does.

Q. Would you read paragraph two, please?

A. Yes. Paragraph Two.

> (Reading): "Townsend agrees to pay to Huck a royalty of five per cent on the net selling price of all lockbolt devices manufactured and sold by Townsend which are covered by any claim of any of the letters patent licensed herein. By net selling price the parties hereto mean the net selling price of lockbolt devices charged by Townsend, less all discounts allowed and taken."

Q. That is the so-called royalty clause, is it not?

A. Yes.

[fol. 687] Q. Now, paragraph three, without reading, but you can check me, provides that Townsend must keep proper books of account relative to its sales and make monthly reports to Huck relative thereto, does it not?

A. Yes, it does.

Q. Paragraph four requires Townsend to make payments of five per cent royalty each quarter, does it not?

A. Yes.

Q. Paragraph five permits Huck to have access to the books and records of Townsend in order to check the amounts of lock-bolt sales made by Townsend from time to time, does it not?

A. Yes, it does.

Q. Then, paragraph six gives Huck a right to cancel on sixty days' notice if Townsend defaults in any of these royalty and payment provisions, is that correct?

A. Yes.

Q. Paragraph seven also deals with royalties, and provides that commencing the second year of the agreement there should be a royalty of at least fifteen thousand dollars and thereafter an annual royalty of at least twenty-five thousand dollars, is that correct?

A. Yes, it is.

Q. Now, you read paragraph eight previously, which is Townsend granting to Huck an improvement license.

Paragraph nine, Townsend agrees to use its best [fol. 688] efforts to provide the required facilities and to manufacture and sell said lockbolt devices in sizes up to, at least, 9/16" pin diameter. Is that a correct reading of that paragraph?

A. Yes.

Q. Now, 9/16" pin diameter means the diameter of the pin tail and the shank of the lockbolt?

A. Yes.

Q. 9/16" is just over a half an inch, isn't it? 1/16" over a half inch?

A. Yes.

Q. Now, would you read paragraph ten, please, Mr. Looker?

A. Yes. Paragraph ten.

(Reading): "For lockbolt devices sold by Townsend as Huck equals with pin diameter up to 3/8", Townsend

agrees to maintain Huck's quality for full equivalence in shear, tension and fatigue, for aircraft shear in tension allowables as defined or as may be defined by ANC Size Manual and for commercial lockbolt devices typical strength properties defined in Huck-published commercial lockbolt engineering bulletins, which Huck agrees to supply to Townsend."

The Court: That is bulletins, that "which", is [fol. 689] that what it means?

A. Bulletins, yes.

The Court: Supply bulletins.

Q. (By Mr. Pomeroy) Now, Mr. Looker, this is rather technical language, at least to me. What does it mean when it—to you, when the agreement says Townsend shall maintain Huck's quality for full equivalence in shear (spelling), s-h-e-a-r?

A. That the shear strength will be equal.

Q. What is shear strength?

A. Shear strength is the strength of the fastener in a plane tending to cut it apart perpendicular to the center line.

Q. Would it help if you had one of these lockbolts in your hand to indicate the shear force?

A. Referring to the unthreaded smooth shank portion, the shear force would be a force which would tend to cut it in half in the plane perpendicular to the axis, with the part (indicating).

Q. In other words, to a layman, it is shearing?

A. Yes.

The Court: Snip it off.

A. That's pretty simple.

The Court: Is that right?

A. That is correct.

Q. (By Mr. Pomeroy) What is—the next word is "ten-[fol. 690] sion." Townsend will maintain Huck's quality for full equivalence in tension, what does that mean?

A. The tension forces would be applied in line with the center line of the part tending to pull the collar off the part

or tending to pull the part apart by failing in tension. I can't think of another word.

Q. That means, a stress or a force exerted longitudinally, with the lockbolt?

A. Yes.

Q. What is full equivalence in fatigue, what does that mean?

A. That refers to the ability of the part to withstand the repetitive tension stresses.

Q. Fatigue, in other words, for getting tired?

A. Yes.

Q. In other words, fatigue as applied here, I take it, means its durability or expected length of life when stresses and strains are exerted upon it, is that one way of putting it, or not?

A. Yes, that would be a fairly accurate way of putting it, yes, sir.

Q. Then, this goes on to say for aircraft shear and tension allowables as defined or as may be defined by ANC 5 Manual, what does that mean? What is the ANC 5 Manual?

A. That is a Government publication on the strength of aircraft elements, I believe it is the title. It is published by [fol. 691] a committee of the Department of Commerce, and shows the strength of—the allowable strengths for aluminum, steel, tubing, rivets, and there was a chapter on lockbolts at this time.

Q. Have you seen this manual?

A. I have, yes.

Q. Is it a book, or what is it?

A. Oh, it's—yes, it is. Resembles an eight and a half by eleven book about three eighths of an inch thick, with a paper cover.

Q. And in here where the—were the Government specifications for these qualities, that is to say, shear strength, tension strength, and fatigue, as applied to, amongst other things, lockbolts?

A. I don't believe there was anything in the ANC 5 Manual on fatigue. The ANC 5 Manual did list the shear and tension allowables, so to speak, of the product, but I don't believe fatigue was mentioned.

Q. That had to do with aircraft lockbolts. The paragraph you read goes on and says:

"And for commercial lockbolt devices typical strength properties defined in Huck-published commercial lockbolt engineering bulletins."

Were there such commercial lockbolt engineering bulletins——

A. (Interposing) Yes.

[fol. 692] Q. (Continuing—which Huck published?

A. Yes.

Q. And what were they, specifications for the commercial type lockbolts?

A. Yes, specifications governing the product, its installation, its strength characteristics and the like.

Q. And Huck agreed to supply these to Townsend, did it not?

A. Yes.

Q. This paragraph ten, Mr. Looker, that we have been discussing was designed, was it not, to make the Townsend lockbolts the ones that they would manufacture, the full equivalent in terms of quality——

A. (Interposing) Yes.

Q. (Continuing)—size, all the other attributes of them, to those already manufactured by Huck?

A. I believe the intent was the full—excuse me.

Q. And defined in the ANC Manual and in the Huck Bulletins, is that correct?

A. I believe the—yes, except that I think there is another paragraph on quality.

Q. Well, there may be another one, but this one says "for lockbolt devices sold by Townsend as Huck equals"?

A. Yes.

Q. Up to 3/8", Townsend agrees to maintain Huck's quality for full equivalence?

[fol. 693] A. Yes.

Q. Meaning, I suppose, complete equality, does it not, full equivalence is completely equal?

A. Yes.

Q. In these characteristics?

A. Right.

Q. Isn't it true that the provisions of this paragraph ten

were necessary in order to really provide a second source for lockbolts?

A. Yes.

Q. If there was to be a second source, that would satisfy Douglas and any other aircraft manufacturer, in other words, this paragraph and Townsend's performance under it was an essential thing to provide?

A. Yes, that is correct.

Q. Turning to paragraph eleven, Mr. Looker, would you read that one?

A. (Reading):

> "Townsend—Paragraph 11.
>
> "Townsend agreed to suitably identify the lockbolt devices as manufactured and sold by it to distinguish from the lockbolt devices manufactured and sold by Huck, the manner of so distinguishing the lockbolt devices to be mutually determined hereinafter."

Q. This means there was to be some mark to identify a [fol. 694] Townsend made lockbolt from a Huck made lockbolt?

A. Yes.

Q. Was there such a distinguishing mark mutually determined?

A. Yes.

Q. What was it?

A. If my memory serves me properly, the Townsend lockbolt had a little letter "C" on the head of the pin.

Q. What did the Huck lockbolts have?

A. It didn't—there were various identifications, none of which truly indicated the fact that they were Huck, there were identification for material and identification which indicated whether or not the part had a close tolerance countersunk head, there were a whole series of them, and I know that on one was an "H". I think that was incidental, because they all didn't have "H"s on them.

Q. But, it was desired that their—that the ones that Townsend was to make could be capable of being distinguished from the Huck ones, is that right?

A. Yes.

Q. That is in case that there was some damage or defect in them, I suppose, and it could be traced that way?

A. Yes.

Q. When you say a "C" in the end of the pin, you mean the end of the pin tail?

A. I believe—no, it didn't want to be on the end of the pin [fol. 695] tail because that was discarded, it wants to be in the top of the head, on the end of the head.

Q. So the "C" would be in the head?

A. Yes.

Q. So it was stamped in "C"?

A. Something like that.

Q. Paragraph twelve. Mr. Looker, you have heretofore read paragraph a, which grants this—makes this license exclusive for two years.

And you read paragraph b, which provides for the same prices for two years. I think you have not had occasion to read the introductory part of that paragraph of the first eight lines, would you read those, please?

A. Yes.

Paragraph Twelve.

(Reading):

> "Recognizing that Huck has a considerable investment in facilities for the manufacture and sale of the licensed products and has, over the past years, spent considerable monies in the development and promotion of said products and, further recognizing that Townsend will be required to expend a considerable amount of money to provide the facilities required for its entering into the manufacture and sale of lockbolt devices herein licensed:"

[fol. 696] And then paragraphs a and b of that same paragraph twelve.

Q. Right. Thank you.

Now, referring to paragraph b which requires Townsend to maintain Huck's prices on lockbolt devices, line four thereof says that this shall be done according to Huck's published current price schedules as changed from time to time?

A. Yes.

Q. There were published price schedules, were there, at this time?

A. Yes. Yes, there were.

Q. And the next phrase says:

"And computed according to Huck's published standard pricing policy,"

what was that?

A. Oh, it was a document generally published in front of the price list which indicated the terms and conditions of any subsequent contract.

Q. Terms and conditions of what?

A. Of any subsequent contract emanating from the price list.

Q. You mean a contract of purchase and sale?

A. Yes.

Mr. Pomeroy: If the Court please, this particular document has not been produced by the Government and I asked [fol. 697] Mr. Lipson for it a little while ago.

It is J2241 and 42. He did not have the original available, so I am presenting a copy.

(Whereupon, a document was marked Defendants' Exhibit DD, for identification, by the reporter.)

Q. (By Mr. Pomeroy) Mr. Looker, I show you a paper which has been marked for identification, Defendant's Exhibit DD, consisting of three pages, and ask you if that is a copy of a pricing—of the Huck pricing statement, or contains such a standard pricing policy statement?

A. Yes, it is.

Q. The first page—excuse me. The first page is simply a memorandum from Martin C. Welch, dated August 23, 1954, to All Product Engineers of Huck, enclosing the attached two pages, is that correct?

A. Yes.

Q. And the attached two pages are headed respectively, "order pricing policy for commercial Huckbolts," and various kinds of rivets on the first page.

And on the second page "order pricing policy for aircraft Huckbolts, Huckbolt stumps, blind Huckbolts, and Huckbolt collars," is that correct?

A. Yes, it is.

Q. Do you remember this particular pricing policy as having been in effect in August, 1954?

[fol. 698] A. Not specifically, no. I assume it was from the memorandum attached.

Q. These pricing policies, Mr. Looker, meaning particularly Exhibit DD, cover various things, do they not, such as terms of shipment, method of producing, method of computing prices, exceptions to the normal pricing policy, quantities, packaging and split shipments?

A. Yes.

Q. So that under the license agreement it would be Townsend's obligation to follow this Exhibit DD, or any similar pricing policy statements that Huck could issue from time to time?

A. Yes.

Q. Is that your understanding?

A. That is correct, yes.

Q. Skipping down to—well, paragraph 13 of this agreement, Exhibit 17, Mr. Looker, provides that

> "Townsend may cancel this agreement at any time upon six (6) months' previous notice in writing to Huck.,"

Is that correct?

A. Yes.

Q. Paragraph fourteen states how notices by one party to the other shall be given, is that correct?

A. Yes.

Q. And fifteen, provides that it is a non-transferable li-
[fol. 699] cense, is that correct, without Huck's permission?

A. Yes.

Q. Sixteen provides that unless the license agreement has been previously terminated, it shall extend for the life of the patent covered, is that true?

A. Yes, it is.

Q. Paragraph seventeen, you have already read, it provides that Huck shall give Townsend the drawings and product specifications, etcetera, that are needed to get into production and that each party will give the other such know-how as they have in the manufacture of lockbolts, is that a fair summary?

A. Yes, it is.

Q. Paragraph eighteen, I think has not been read. Would you read that, please?

A. Yes. (reading):

"Paragraph 18. The license granted to Townsend in paragraph 1 hereof shall commence at the date of this agreement with respect to all lockbolt devices, except those manufactured for sale for use in aircraft, and such license for use in aircraft shall not begin for nine (9) months from the date hereof."

Q. Do you remember some discussion about this topic in the meeting that you have testified to when this license was negotiated?

[fol. 700] A. I remember some discussion, yes.

Q. Just answer yes or no.

A. Yes.

Q. Did Huck want Townsend to stay out of the aircraft business longer than nine months originally?

A. Yes.

Q. And did Townsend want to get in the aircraft business earlier than nine months originally?

A. Yes.

Q. Paragraph nineteen, Mr. Looker, provides for Townsend shall properly affix statutory patent notices to all of the containers wherein they sold lockbolts and in all Townsend advertising, indicating that these were covered by Huck patents, is that right?

A. Yes, it is.

Q. Paragraph twenty, which is the foot of page seven of Exhibit 17, will you read that paragraph, please?

A. Yes.

(Reading):

"The pendency of litigation on any patents that are or may be included in this agreement shall in no wise affect this agreement, but in the event that any claim or claim of such patents shall be held invalid by a court of last resort or by a lower court from which [fol. 701] no appeal or petition for writ of——"

The Court: (Interposing) Certiorari.

Q. (By Mr. Pomeroy) Certiorari. I think that is the way the lawyers pronounce that word.

A. Would you do it again?

Q. Once is enough. That's all right.

The Court: Certiorari.

A. (Reading):

"certiorari has been taken within the time permitted therefor, then Townsend after five years from such event or from the expiration of the time for appeal or writ of certiorari from said lower court and no appeal or writ having been taken, shall thereafter be relieved from any and all obligations to pay royalties for or on account of any fastening devices which are covered only by the claim or claims so held to be valid."

Q. Do you remember any discussion about that topic at the meeting which you mentioned in which the patent was negotiated, the license was negotiated?

A. May I read it over again, please?

Q. Yes, read it to yourself.

A. Yes. Yes.

Q. That is a clause which would exonerate or excuse the Townsend Company as licensee from paying royalties [fol. 702] to Huck if the Huck patents were declared invalid in some other litigation?

A. Yes.

Q. After five years had elapsed, is that right?

A. Yes, it is.

Q. Paragraph eleven of the agreement, Mr. Looker, refers to the possibility of a license—Huck granting a license in Canada and first offering it to Townsend if it decides to do so, is that right?

A. Yes.

Q. Paragraph twenty-two is the last paragraph which says that all provisions hereto are material to the contract and any breeches thereof shall be considered as material breeches, is that right?

A. Yes. The end of the paragraph.

Q. Mr. Looker, at the meeting which you just referred to, in which the patent license was negotiated, you mentioned in your direct testimony that Mr. Johnson was present as representing the Townsend Company, is that right?

A. Yes.

Q. Representing them as an attorney?

A. Yes.

Q. Or a lawyer? And Mr. Sterritt was present representing the Huck Manufacturing Company?

A. Yes.

[fol. 703] Q. Do you recall whether there came a time in that meeting when one of those lawyers accused the other of some language that he considered offensive?

A. Yes.

Q. What was that episode, if you recall?

A. At the time paragraph twenty was explained to the Townsend Company, the motive and intent of the Huck Company.

Q. What was the offensive language, and who said what to whom about it?

A. After——

Q. (Interposing) As you recall it?

A. (Continuing)—after Mr. Sterritt explained the intent of paragraph twenty to the Townsend Company, the Townsend People, Mr. Johnson said that it is a fine way to call a guy, an S.O.B., he didn't use the initials.

Q. Mr. Johnson said that of what? Concerning what Mr. Sterritt had previously said, is that right?

A. Yes. Yes.

Q. When did you first meet Mr. Johnson?

A. My first recollection of having met him is at that meeting.

Q. When did you first meet Mr. Dickenson, Mr. Looker?

A. During the meeting, previously testified, in Beaver Falls, I believe, in 1951. That's my earliest recollection.

Q. And when did you next meet Mr. Dickenson?

A. The next I recall is the meeting just referred to. [fol. 704] There may have been other meetings, but I don't recall them. They are not fresh in my memory.

Q. Then, between the date of the license, say the date of the meeting that you just referred to and the time of the termination of your employment at Huck, how many times did you see Mr. Dickensen, as you can recall?

A. I recall four specific times.

Q. In this period that you have just identified?

A. Between 1951, and 1956, yes.

Q. Well, you mentioned two?

A. Yes.

Q. You mentioned two. What was the next one?

A. There were five, rather, not four, but five; the two just mentioned, plus the meeting held in Beaver Falls that Mr. Mathews and I attended; testified to previously.

Q. That was what?

A. That's the third.

Q. That was what year, or month?

A. I just don't recall the month and year the next meeting was held.

Q. At the meeting which you mentioned some discussion concerning freight policy?

A. Freight equalization, yes. The next meeting was held —the next meeting I remember seeing Mr. Dickenson was the meeting at the Homestead in Virginia where I attended [fol. 705] a Townsend Company sales meeting.

And the fifth meeting was held in Santa Ana, California, a rather brief encounter, where I saw Mr. Dickenson.

Q. Is that while you were still employed by Huck?

A. Yes.

Q. When was that?

A. I may be mistaken, but I believe it is the time—this is Mr. Chilcoat—previously testified to. I may be mistaken, but I think, I believe that's it.

Q. And you met Mr. Dickenson at that time?

A. Yes.

Q. The Homestead meeting to which you just referred, did you identify the time of that?

A. I did not.

Q. Can you?

A. I cannot.

Q. Is that when you were giving a lecture; giving a lecture?

A. I did give a lecture.

Q. Give a lecture on lockbolts?

A. I gave a lecture on—that time and place—on lockbolt sales, yes.

Q. Lockbolts, and lockbolt sales?

A. Yes.

Mr. Pomeroy: Thank you very much. I will offer [fol. 706] in evidence Exhibit——

The Court: (Interposing) DD.

Mr. Pomeroy: (Continuing)—Double D.

The Court: Any objection?

Mr. Lipson: None.

The Court: It may be received. Any further cross examination?

Mr. Haggerty: No further cross examination.

Mr. Lipson: With the Court's permission, we have a short redirect examination of Mr. Looker. I hope it is a short redirect examination.

The Court: You should have said with the Court's prayer.

Mr. Lipson: I am sure we all join the Court on that.

Redirect examination.

By Mr. Lipson:

Q. Mr. Looker, on examination by counsel for Defendants Armour and Huck, you were asked on page 486 of the transcript, line 21: (Reading)

"Question: And your interest is, if possible, to see all of these defendants convicted; isn't that true?

[fol. 707] "Answer: No.

"Question: No? Isn't it within your line of interest that they should be convicted?

"Answer: Yes."

Mr. Looker, do you have any further explanation of what "no" and "yes" meant to that context?

Mr. Haggerty: Well, I object to it, may it please the Court. It is not proper redirect examination. I don't think it calls for an explanation. It is a direct question and a direct answer.

The Court: He may answer.

A. When I answered "no" I meant that I had no interest in seeing the defendants, Mr. Armour and Mr. Dickenson, convicted in this case. I do have some interest, or my company has some interest in the entire monopoly situation, and I do, therefore, have an interest in the case.

However, I bear no malice toward Mr. Armour or Mr. Dickenson in this case.

Mr. Haggerty: I object to that and ask that it be stricken. From the witness—from the record, that he bears no malice. I think that is an issue of fact for the jury.

The Court: It may stand.

Q. (By Mr. Lipson) Mr. Looker, in the cross examination [fol. 708] by Mr. Haggerty, on page 488 of the transcript, line 17, on that page, you are asked a question:

"Question: And you were in complete charge of sales; were you not?

"Answer: Yes."

Is that a complete answer, Mr. Looker?

A. Could you read the previous question, too?

The Court: 1954, I think.

A. In 1954. Prior to May, 1954, I was not. And, after May, 1954, I was charged with the responsibility of sales, yes.

Q. (By Mr. Lipson) Is that the complete answer to that question?

A. Well, by complete charge, I was responsible to the management of the company for the conduct of the sales activities of the company, and many of the things I did with express and explicit permission.

I did, however,—or was charged with the responsibility of exercising my own judgment in many of the matters that I had responsibilities for. I know of no other way to increase the testimony.

Q. If I may refer for the moment to Government's Exhibit 17,——

The Court. (Interposing) The witness has it.

Q. (By Mr. Lipson) You do. May I?

If you recall, Mr. Looker, on cross examination you were requested to indicate the binding time of some certain provisions in this agreement. The number of years that [fol. 709] certain provisions would be enforced and the questioning with respect to this appears on page 503 of the transcript, and I believe at that time you were questioned with respect to a and b of twelve.

I ask you to direct your attention to paragraph 8 of Government Exhibit 17.

Now, you have previously read paragraph eight. Would you summarize its contents, what it is about, just the title.

A. I don't know that I can easily summarize it.

Q. Well, with the Court's permission, then, would you read it over. It is a short paragraph.

A. Yes. (Reading):

> "Townsend hereby grants to Huck a non-exclusive royalty—free license, with the right to sublicense on any improvements on said lockbolt devices made or acquired by Townsend during the life of this agreement coming within the claims of the licensed patent or lockbolt devices of the same type which are substitutes for the lockbolt devices licensed herein by Huck."

Q. Now, examining the remainder of Government's Exhibit 17, is there any limitation on the period in which paragraph No. 8 would be in force?

[fol. 710] A. No. No, the life of the patent.

Q. Is that the only time limitation that you know?

Mr. Pomeroy: If the Court please, the agreement will speak for itself.

The Court: It does, but——

A. (Interposing) It is the only time limitation that I know of, yes.

Q. (By Mr. Lipson) Thank you.

Based on the testimony this morning, you apparently at one time made an offer to a firm known as Aviation Developments Limited with respect to a lockbolt device about which there was some testimony this morning. Do you recall that incident?

A. Yes, I do.

Q. Do you recall whether or not Aviation Developments Limited responded to you?

A. Yes, they did.

Q. Do you recall the nature of that response?

A. Yes.

Q. What was it?

A. It was a letter.

Q. What did it contain; what kind of information did it have?

A. It said that the——

Mr. Haggerty: (Interposing) Well, just a moment. I object. I object. I presume that the letter would be the best [fol. 711] evidence.

Mr. Lipson: With the Court's permission, then,——

(Whereupon, a document was marked Government's Exhibit No. 81, for identification, by the reporter.)

Q. (By Mr. Lipson) Mr. Looker, I show you Government's Exhibit No. 81 and ask you if you can identify that exhibit?

A. I can.

Q. What is it?

A. This is the reply from Aviation Developments Limited just referred to.

Mr. Lipson: I show Government Exhibit No. 81 to counsel for defense, for examination and possible objection.

Mr. Haggerty: May it please the Court, with reference to this letter, it is purely hearsay, it is a correspondence between this witness and between somebody, and it covers some other subject matter, and I do not think it is permissible in evidence.

Would your Honor care to see it, or has your Honor seen it?

The Court: No, I have not seen it.

(Whereupon, the exhibit was handed to the Court.)

The Court: Do you wish to argue that?

Mr. Lipson: Your Honor, the only reason we are putting this—that we are offering this document at this time is in order to present the entire story of the Aviation Develop- [fol. 712] ments Limited offer of the Looker Lockbolt.

The issue was put in on cross examination by the defense, and we believe the Government has the right to show the entire story rather than just a limited portion.

Mr. Haggerty: It was only put in for the limited purpose on proper cross examination to show that he made an offer to a company and he has testified the company did not accept the license.

Now, to go into hearsay matters, and there are hearsay matters contained in that letter, which are entirely extraneous and immaterial to the matters here before us.

Mr. Pomeroy: If the Court please, I wish to join in the

objection but independently on behalf of Townsend and Mr. Dickenson, I would think this would be prejudicial to them if it was admitted generally.

The Court: I don't recall that the issue that was raised —in other words, if he raised a new point, I think you should be entitled to respond to it, but I do not think this is actually that issue, do you?

Mr. Lipson: Well, your Honor, the issue—this is from recollection, because, obviously, we haven't had a chance to examine the transcript of this morning's proceedings. Did I understand your Honor had ruled on it?

The Court: No, I had not. I just wanted you to concur with what I possibly will.

[fol. 713] Mr. Lipson: I think it is relevant, your Honor, to what was brought out this morning. It was brought out that Looker had tried to license a patent development of his Looker Lockbolt, we called it, to a number of firms. I believe Illinois Tool was one of them, and Aviation Developments Limited was mentioned as one of them.

Illinois Tool refused for reasons stated this morning, and it was also noted that Aviation Developments refused. However, no reasons were ever elicited why Aviation Developments refused. Now, we submit, if it was relevant to determine why Illinois Tool refused, it is equally material to determine why Aviation Developments refused.

Mr. Haggerty: I think it is totally——

Mr. Lipson: (Interposing) Particularly because it goes to the question of——

Mr. Haggerty: (Interposing) Go right ahead.

Mr. Lipson: (Continuing) —of the question of whether or not there was a valid Looker Lockbolt to license, whether he was licensing something for real, whether or not firms would regard this as a desirable product, or whether they rejected it for reasons apart from its value as a fastening device.

The Court: But, Mr. Haggerty offered it merely testing the credibility, as I recall.

[fol. 714] Mr. Haggerty: That is correct.

The Court: And not to test whether or not we are going into the business of Mr. Looker's Lockbolt. I think it is immaterial.

Mr. Lipson: On that basis, your Honor, I will withdraw the offer.

The Court: All right.

Q. (By Mr. Lipson) Now, Mr. Looker, you were—it was brought out—subpoenaed—strike that.

You testified—will let me strike that again.

You testified this morning that you had a meeting with me, Jack Lipson was "me", you recall the circumstances of that meeting?

A. Yes, I do.

Q. Would you describe to the jury what happened at that meeting?

The Court: When, please?

Q. (By Mr. Lipson) This is, I believe with reference to a period of October, 1960.

A. Assuming that is the period of the Grand Jury held in Detroit to investigate alleged monopoly practices, I had a meeting with yourself, prior to going on and testifying before the Grand Jury.

Q. What did that meeting—pardon me. What did that meeting consist?

[fol. 715] A. About ten or fifteen spoken words.

Q. Do you recall what any of the words were?

A. I believe I said I am Bob Looker, and you said I am Jack Lipson. And—or some such, and you said if you will wait here I will call you when we go on. And I said, thank you. And I don't know anything else was said, or that was about what was said.

Q. Was there anything else in connection with conversations between you and I at that period?

A. Not to my memory, no.

Q. Did you appear here in Detroit voluntarily at that time?

A. No.

Q. Under what auspices did you appear?

A. I had a subpoena.

Q. Mr. Looker, I show you Defendants' Exhibit Marked X and I direct your attention to paragraph Numbered 3 in that letter. Will you just read it to yourself.

The Court: This is the letter of October 27, 1961; Mr. Looker writing to the Department of Justice?

Mr. Lipson: Yes, sir.

The Court: All right.

Q. (By Mr. Lipson) Now, you have already had occasion to read this paragraph 3 to the Jury. With your Honor's permission I would just like to re-read it rapidly so that—the paragraph No. 3—so that the questions I ask [fol. 716] will have some meaning?

The Court (Interposing) All right.

Mr. Lipson: (Continuing) —to the Jury.

The Court: He had read it. All right, go ahead.

Q. (By Mr. Lipson) (Reading): "I have given Huck a full 20 per cent distributor discount on Brown-Line Collar Splitters and spare parts purchased by Huck for resale purposes, shipping parts usually immediately and on open credit, despite Huck's refusal to negotiate a distributorship agreement."

What is a Collar Splitter, that is all I want to get at?

A. This is a device manufactured by our company for cutting away the installed collar of a lockbolt device, for removal purposes.

Q. Did you have some kind of a contractual relationship with Huck Manufacturing Company with respect to this device?

A. No, we didn't.

Q. Did you have any kind of a relationship with Huck Manufacturing Company with respect to this device?

A. Other than manufacturer and a buyer relationship.

Q. Is it a normal practice of your company, Brown-Line, to grant a percentage discount of that size to a buyer?

A. No.

Q. Would you explain why the Huck Manufacturing [fols. 717-721] Company was offered such a discount?

A. Yes. The parts used was predicated on the use of lockbolts and this was a device for removing them when they had to be removed. Once a lockbolt collar is swaged on the pin it is very difficult to remove, and this is a very specialized tool, it was my intent and hope to encourage the Huck Company to sell the collar splitters of our company's manufacture and so extended the 20 per cent discount to continue the relationship.

[fol. 722] Redirect examination. (Continued)

By Mr. Lipson:

Q. Mr. Looker, I show you a photocopy of Defendants' Exhibit Y. Do you recall that exhibit?

A. I do, yes.

Q. Is that the exhibit that deals with the possibility of licensing another firm for a lockbolt?

A. Yes.

Q. When was this document written?

A. August 11, 1955.

Q. And you were with Huck at that time?

A. Yes, I was.

Q. May I ask what kind of a lockbolt is referred to in this Defendants' Exhibit Y?

A. We were referring to a lockbolt designed specifically for building construction, heavy frame work.

Q. Was Huck making such a lockbolt at that time?

A. No.

Q. Do you know whether the Townsend Company was making such a lockbolt at that time?

A. Yes, I do.

Q. Were they?

A. No, they were not.

Q. To your knowledge, was a special license ever granted to Camcar, I believe that is the firm mentioned in the Exhibit?

[fol. 723] A. No, it was not.

Q. Thank you. Mr. Looker, I would like, at this time, to show you Defendants' Exhibit CC, a patent bearing the date April 11, 1961, and the Egnot drawing which I believe is the—it is Defendants' Exhibit Z.

With respect to the patent, what Government organization issued this patent?

A. The Department of Commerce.

Q. To whom?

A. To myself.

Q. Now, would you compare the, the Egnot drawing with CC, please.

Now, did you ever have an occasion to solicit a patent attorney's opinion about the relationship of those two

illustrated devices, the devices illustrated in the, the Egnot drawing, and the device illustrated in CC, the patient?

A. Yes.

Q. On what occasion did you solicit this advice?

A. Immediately following receipt of the Egnot Disclosure sent to me by Mr. Sterritt, I sent this same drawing down to my patent attorney and asked him——

Q. (Interposing) Who is he, by the way?

A. Mr. William Pavitt.

Q. And where is he located?

A. He is located in Los Angeles.

Q. And what is the time of this? When did this occur?

[fol. 724] A. It was last year sometime.

Q. What did you ask Mr. Pavitt?

A. I asked him——

Mr. Haggerty: (Interposing) Well, just a moment. May it please the Court, I think we are getting into hearsay. As to what Mr. Pavitt told him would clearly be hearsay.

Mr. Lipson: Your Honor, this goes to the question of credibility.

Mr. Haggerty: Even then, I don't think we can eradicate the rule of hearsay.

Mr. Lipson: Motive. The issue was raised on cross examination, your Honor, concerning a comparison between these two devices.

The Court: I well recognize that defense counsel did cross examine him, and that you should be allowed certain latitude with respect to redirect, but I am wondering whether or not conversation is the answer.

I think I will sustain the objection. This is still hearsay, as to what the conversation was. What he did is another thing.

And, this is well after the indictment.

Mr. Lipson: Yes, your Honor.

Q. (By Mr. Lipson) Mr. Looker, I would like to show you—may I have the Z and CC drawings, please?

I would like to show you a copy of the Government [fol. 725] Exhibit No. 52—the document I am actually showing the witness is a photocopy of Exhibit 52, if you have no objection.

The Court: This is the October 1st, '55 price increase?

Mr. Lipson: I believe that is the date.

Mr. Haggerty: October 3rd, '55.

Mr. Lipson: Third.

Mr. Haggerty: I have no objection to your using that, Mr. Lipson.

Q. (By Mr. Lipson) Do you recall the price increase referred to in that document?

A. I do, yes.

Q. To what extent, Mr. Looker, was the price increased with respect to lockbolts only, noted in that document, justified in order for the Huck Manufacturing Company to stay in business and make a nominal profit?

A. The increase shown for commercial lockbolt pins and collars was justified. The increase shown for aircraft lockbolts was not justified.

Q. Will you explain your reasons for that conclusion?

A. Yes. At the time that we were—the company was deciding when to raise prices and for how much, the conclusion was that the commercial lockbolt should be—commercial lockbolt prices should be increased fairly substan-[fol. 726] tially and that there was little or no justification for some of the aircraft lockbolt price increases. I believe for the aircraft lockbolt steel prices. Particularly 3/16 and ¼" diameters, which constituted a large sale of aircraft lockbolts.

At the time the price increase was compromised to the extent that although no increase was justified for the 3/16" and ¼" diameter steel aircraft lockbolts, they were increased five per cent and that the commercial lockbolt pin prices were not increased as much as they—as much as the company wanted to increase them, prior to this change.

Q. Thank you. May I have the document, please?

Apart from the present proceedings, have you ever had occasion to testify in any court?

A. Yes, I have.

Q. What occasions?

A. I testified before the United States Court in the Southern District of California.

Q. On what occasion was that?

A. On an occasion of a patent infringement suit between Huck and Townsend Company, 1952.

Q. And at whose request did you testify?

A. At Huck's request.

Q. And on whose behalf did you testify?

A. On the behalf of Huck.

Q. When was the other time that you testified?

[fol. 727] A. I testified in deposition for a patent interference case in Los Angeles.

Q. Was the case in Los Angeles, or was the deposition in Los Angeles?

A. The deposition was in Los Angeles.

Q. Who were the litigants?

A. The litigants were the Huck Manufacturing Company and the Olympic Screw and Rivet Company.

Q. When did this occur?

A. It occurred, I believe, last year.

Q. At whose request did you testify?

A. At the request of the Huck Company.

Q. On whose behalf did you testify?

A. On the behalf of the Huck Company.

Q. After you testified, were there any statements made to you by the Huck people with respect to the nature of the testimony you gave?

A. Yes.

Q. What were those statements, and who made them?

A. Both Mr. Blair and Mr. Sterritt congratulated me on several occasions for my expert testimony and for the splendid cooperation I gave the Huck Manufacturing Company during the entire deposition proceedings.

Q. Would you identify Mr. Blair, I believe Mr. Sterritt has already been identified.

[fols. 728-729] A. Well, Mr. John Blair is a member of the firm Harness, Dickey and Pierce, and is their expert on patent interference matters, and was handling that case for Huck.

Q. One further question, if I may. The sum of $1,200,000 was brought out yesterday as the claimed damages in your suit against the Huck Manufacturing Company and the Townsend Company.

A. You are referring to the Brown-Line suit, sir?

Q. That's right, the Brown-Line suit.

A. Yes, that is correct.

Q. Would you explain to us how that figure $1,200,000 was arrived at?

A. Yes, we estimated that we suffered—have suffered damages during the past four years of some four hundred thousand dollars profit, before taxes, and we trebled that number because it is a trebled annual suit.

Mr. Lipson: I have no further questions on redirect, your Honor.

Mr. Haggerty: No questions, may it please the Court.

The Court: Mr. Pomeroy?

Mr. Pomeroy: I have nothing further, your Honor.

The Court: Any other cross examination?

All right, you may step down.

* * * * * * *

[fol. 730] Robert E. Byrnes, was thereupon called as a witness on behalf of the Government, having been first duly sworn by the Court, was examined and testified upon his oath, as follows:

Direct examination.

By Mr. Lipson:

Q. Would you state your full name for the record, please?

A. Robert E. Byrnes.

Q. And your address, Mr. Byrnes?

A. Chicago, Illinois. You want my whole address?

Q. Your whole address.

A. 130 Cartage Lane, it's Roselle, Illinois, it is a suburb outside of Chicago.

Q. And your business address?

A. 536 South Clark Street.

Q. What is your present occupation, sir?

A. Special agent of the F. B. I.

Q. And how long have you been employed in that capacity?

A. A year and a half, sir.

[fol. 731] You will have to excuse me, I have a sore throat. I think I am getting the flu.

The Court: Excuse this witness right now.

Mr. Lipson: I will excuse your sore throat.

Q. (By Mr. Lipson) Where were you previously stationed before you came to Chicago?

A. At Atlanta, Georgia.

Q. Have you ever had occasion to visit the Lockheed Aircraft Factory outside of Atlanta?

A. Yes, sir. Back in January, 1962, I took some photographs of lockbolts being installed in a section of an airplane at Lockheed.

Q. All right. Who was with you on that occasion?

A. Special Agent John Boyle, and yourself and Mr. Esherick, I think, I can't recall, and—there was four of us.

Q. I would like, at this time, to show you an exhibit—Exhibits 8, 9, 10, 11, 12, 13, 14, 15, and 16 for the Government, and ask you to look at each of those exhibits.

Mr. Pomeroy: If the Court please, 8 to 13, I think, have been received in evidence already.

Mr. Lipson: Your Honor, they have been received in evidence, but on a very limited basis, and the Government prefers that they be received in their entirety for the truth of what they depict.

If I may draw the Court's attention to page 164 of [fol. 732] the transcript of this case, starting on line 12 of that page:

(Reading):

"Mr. Lipson: Your Honor, at this time, the Government offers into evidence the exhibits previously identified by Mr. Looker as 8 through and including 13

"(Exhibits handed to counsel.)

"Mr. Lipson: Your Honor, there being no objection——

"Mr. Dickey: Well, wait a minute. I take it that these are photographs that were not taken by the witness.

"Mr. Lipson: I think we established that.

"Mr. Dickey: Well, all right. And he didn't see them taken and he wasn't present when they were

taken, and that they are illustrative merely of the way of installing the lockbolt.

"Mr. Lipson: They are offered for that purpose.

"Mr. Dickey: And there is no evidence here it is the photograph of some actual operation that is on some aircraft or product that was in the course of manufacture during this installation.

[fol. 733] "The Court: The witness testified that it apparently was.

"Mr. Lipson: Yes, Mr. Dickey, it is exactly what Mr. Looker did testify to.

"Mr. Dickey: Well, Mr. Looker wasn't present.

"My point is this: I have no objection to this admission as illustrative of the installation of the lockbolt. I just want to get them characterized that way, that is, no objection that this witness either saw or carried on himself. He is testifying from his knowledge or memory or familiarity of installation of lockbolts.

"The Court: It is received for that purpose alone.

"Mr. Lipson: Your Honor, if there exists any problem at all with respect to the authenticity of the device, these photographs we are referring to, we have in the court room the actual photographer and we are ready and willing to put him on the stand to testify to that and since Mr. Dickey does have these reservations, we reserve our right to put the photographer on the stand."

The Court: All right. Go ahead.

[fol. 734] Q. (By Mr. Lipson) Now, Mr. Byrnes, can you identify whether exhibits 8 through and including 16, were the photographs taken by you on that occasion?

A. Yes, sir, they are. On certain photographs, are close-ups, is a card shown with my initials and John Boyle's initials and the date they were taken, and the file number of the Atlanta office. Each photograph is also stamped on the back explaining what it is and the date and by whom the photographs were taken.

Q. Who developed these photographs?

A. I developed the negatives and printed the photographs myself.

Q. Did you ever have any prior experience as a photographer?

A. Yes, sir.

Q. On what occasion?

A. Well, when I worked in the New York office of the F.B.I. I was a photographer for about eight years.

Q. Now, the exhibits 8 through and including 13 have already been identified, and I see no point to going into them at this time.

With respect to Exhibits 14, 15 and 16, could you tell us what each of those represent, in order?

A. On the back explains this is a photograph of the rear beam center wing section of the plane.

Q. Now, this is which exhibit you are holding up?

A. This is 14.

[fol. 735] Q. All right. Now with respect to 15, what does that bear?

A. No. 15 is the center wing section, front beam showing.

Q. And No. 16?

A. And No. 16 is the center wing section.

Q. Thank you.

REOFFER OF CERTAIN EXHIBITS

Mr. Lipson: Your Honor, at this time the Government would like to reoffer Government Exhibits 8 through 13 in their entirety and without limitation as depicting the actual installation of lockbolts under factory conditions at the Lockheed Aircraft Plant in Marietta, Georgia, taken approximately one year ago.

Mr. Haggerty: No objection, may it please the Court.

Mr. Lipson: At the same time we now offer Exhibits 13, through 16, as various sections of aircraft there in construction at that plant, at that time.

Mr. Haggerty: No objection.

The Court: They may be received.

* * * * * * *

[fol. 736] Cross-examination.

By Mr. Dickey:

Q. Mr. Byrnes, did you put the legend on the back of these photographs, Exhibits 1 through 16?

A. The stamp marks?

Q. Yes.

A. Mr. Boyle and myself did, Agent Boyle. He wrote—the stamp is just a—made with a small stencil and he wrote it in his own hand, the description of what the installation was.

Q. You observed all of this, did you?

A. Yes sir, we worked together.

Q. Looking at Photograph No. 1, which is Exhibit 8, at the upper left part of the photograph are—those two parts projecting there, are those lockbolts?

A. Yes, sir, as best I can recall. The man whose back is [fol. 737] shown in one of the photographs is installing these and we took the photographs while he was working alone at the beam or whatever section you call it. I don't know.

Q. The reason I inquire is that I——

A. (Interposing) They're not—they're not die shops, so I don't know whether they're supposed to be ridges or—they're marked on it. You can see it in this one (indicating).

Q. And looking at Photograph No. 2, which is Exhibit 9,

I call your attention to the part shown in the upper right hand and——

Mr. Haggerty: (Interposing) Will you keep your voice up, please? I don't think we can all hear you.

Q. (By Mr. Dickey, continuing) Referring to Exhibit 9, which is Photograph No. 2, the part shown in the upper righthand corner of the photograph, is that a lockbolt and is that——

A. (Interposing) We don't really know. I presume it is. But this photograph was taken to show the lockbolt gun more than anything else and show it being put on the lockbolt.

Q. You don't know, then, as—whether that's a lockbolt that has been already applied or not, that one in the upper righthand corner?

A. I assume it was, but I really don't know.

Q. Referring to Photograph No. 6, which is Exhibit 13, I call your attention to the parts which appear to be to the rear at the beam. Do you see those in the upper part in the [fol. 738] upper righthand part of the photograph?

A. Yes.

Q. What are those parts; do you know?

A. Offhand I wouldn't. On looking at this, it looks like a different section than behind the one the man is working on. This is what he's working on, and the section number one and two in the background is a different piece, I presume.

Q. Different piece. That's not part of the section he's working on?

A. Well, looking at it this way, I would say no.

Q. Yes. And I notice some spots or marks on those pieces that are back of the section the man is working on. Are those lockbolts?

A. I don't know. I didn't have any occasion to take any photographs of them.

Q. Okay. Looking now at Photo No. 7, which is Exhibit 14, what part of an airplane is that? Show me.

A. I would have to refer to the back of the photograph, if I may. I don't know one part of an airplane from another.

Q. Oh, I see.

A. Those descriptions were taken from one of the work-

ers there and Mr. Boyle took notes and transferred it on the back of the photographs as they were printed.

Q. The information put on the back of these photographs is information, then, that was obtained from workmen?

[fol. 739] A. Right, workmen on the job.

Q. Not information within your personal knowledge or Mr. Boyle's either; is that right?

A. That's right.

Q. All right. Now, you don't know what parts—what part is this (indicating)? It looks like some sort of a beam, but do you notice any lockbolts applied in that—in that beam, in that part?

A. Do you mean did I observe any beam——

Q. (Interposing) Are there any applied there that you can point out?

Mr. Lipson: Your Honor, I object to this. The witness has not testified as to his knowledge to distinguish lockbolts from any other fastener. He has testified as a photographer to the authenticity of the devices here photographed.

The Court: Well, he did make a legend on the back and I think you are entitled to cross examination.

Mr. Lipson: The legend makes no reference to lockbolts on this, your Honor.

The Court: He does not—he testified he did not know one wing part from another.

Mr. Lipson: That's right.

The Court: Well, I think it is proper cross examination in this respect.

[fol. 740] A. Well, the legend on the back of the photograph describes this as the rear beam, center wing section and that's—we didn't take any photographs of lockbolts being put in this section of the wing.

Mr. Pomeroy: Excuse me. What exhibit number is this?

Q. (By Mr. Dickey, continuing) Well, then, you don't know whether there are any lockbolts applied in that section or not in that photograph?

A. No, this was just a photograph taken from a distance showing the rear beam of the center wing section.

Q. I see. All right. Further, with respect to the same photograph, Exhibit 14, I notice in this beam that you

mentioned a lot of dots along the lower part of it, a lot of dots along the upper part of it and dots running up across it.

Do you know what those are?

A. No, sir, I do not.

Q. No idea?

A. No, sir.

Q. Does the same answer apply to Photograph Number 8, Exhibit 15?

A. This is an overall photograph of the center wing section, front beam showing. That's all that was supposed to depict.

Q. Oh. And whether or not there are any lockbolts in [fols. 741-742] this beam, you don't know?

A. I do not, no.

Q. The same applies with respect to Photo Exhibit 9, Government Exhibit 16?

A. Number 16 is an overall photograph of the center wing section.

Q. Any lockbolts applied in that wing section, as far as you know?

A. I do not know.

Q. You don't know.

The Court: I take it that your services were acquired purely for the purposes of photography, is that correct?

A. Yes, sir, I just took the pictures I was told to and——

The Court: (Interposing) All right.

Mr. Dickey: That's all I have.

* * * * * * *

[fol. 743] Mr. Lipson: Mr. George Q. Mathews, please take the stand.

GEORGE Q. MATHEWS, was thereupon called as a witness in behalf of the Government, and having been first duly sworn by the Court, was examined and testified upon his oath, as follows:

Direct examination.

By Mr. Lipson:

Q. Mr. Mathews, would you please state your full name and address?

A. George Q. Mathews, 3311 Kirkwood Avenue, Orange, California.

Q. And what is your business address?

A. 2901 West Coast Highway, Newport Beach, California.

Q. And with whom are you employed?

A. Rosan, Incorporated.

Q. What is your age, Mr. Mathews?

A. 44.

Q. Mr. Mathews, beginning the period of about 1943, would you tell us with whom you were employed and what position you were employed in?

A. 1943?

Q. Yes.

[fol. 744] The Court: I think he wants to know when you first went to work for Huck.

Mr. Lipson: No, your Honor, this is going back a little.

A. That's beyond that a little, sir.

The Court: All right.

A. In 1943 I was employed by General Electric Company.

Q. (By Mr. Lipson) In what capacity?

A. The best my memory serves me, I was purchasing agent.

Q. How long were you employed by General Electric?

A. I was employed with General Electric until 1952, so it would have been about twelve years.

Q. Did you hold the same position throughout this period?

A. They were all related to procurement functions, yes, sir.

Q. With whom did you work after you left General Electric?

A. Wayne Works, Incorporated.

Q. And where are they located?

A. Richmond, Indiana.

Q. What kind of business is Wayne Works engaged in?

A. They're manufacturers of bus bodies for school transportation and for some small cities.

Q. What position did you hold with Wayne Works; what was your job?

A. I was again purchasing agent.

Q. Did you supervise any personnel there?

[fol. 745] A. Yes, we had, in addition to the normal purchasing functions, the buyers, the expediters, we had the production scheduling and the—what was called the knock-down shipping department. This is where the buses were partially assembled and then shipped for overseas shipment for subsequent assembly at the destination.

Q. Did your job concern or relate to the purchase of fasteners by Wayne Works in any way?

A. Through my buyer, yes, we purchased all the fasteners.

Q. Were you familiar with the Huck Manufacturing Company while you were employed at Wayne Works?

A. Yes. I was.

Q. In what relationship?

A. They were a supplier of ours.

Q. When did you leave Wayne Works?

A. In 1954.

Q. And where did you go?

A. I went to work with Huck Manufacturing Company.

Q. In what capacity?

A. As sales manager.

Q. About how long a period of time did you work for Huck Manufacturing Company?

A. I worked with Huck Manufacturing Company from 1954 until 1960.

Q. Can you give us the approximate date in 1960 when [fol. 746] you left Huck?

A. I believe it was September of 1960, sir.

Q. And where did you go from there?

A. To Rosan, Incorporated.

Q. In what position were you employed while you were with Huck originally in 1954?

A. Originally I was employed as sales manager.

Q. Did your position change at any time while you were employed by Huck?

A. My position changed when Mr. Looker left the company in 1956. I became vice president of sales.

Q. Mr. Mathews, have you received a subpoena to testify at this proceeding?

A. I have, sir.

Q. Have you ever had occasion to talk to any of the attorneys on either side involved in this proceeding?

A. I have, sir.

Q. Which attorneys?

A. I have talked to yourself. I have talked to the defense attorneys, both defense attorneys.

Q. Would you name them, please?

A. I don't know if I can name them or not. They're all sitting here. There was three of the defense attorneys, I believe, that I visited with in my office. I believe it was January.

And I visited with the Huck attorneys once since I have [fol. 747] been here. I visited with yourself once in my office.

Q. Did you ever come to the Department of Justice in Washington, D.C.?

A. No, sir.

Q. Getting back to your original employment at Huck Manufacturing Company, would you tell us what was the nature of your duties as sales manager for Huck in 1954 when you originally worked for them?

A. Well, in 1954, when I was originally employed, my basic duties were to develop the use of lockbolts on a broader marketing basis, trying to get into more industries than we were now selling to and to develop a sales field organization to accomplish this goal.

Q. Did you have an occasion at that period of time, shortly after you came with Huck, to engage in any reorganization of the sales department?

A. By reorganization——

Q. (Interposing) Was there any major change made in the structure of the sales department at that time?

A. Well, it might be presumed to be a change, but, that, in that after my joining Huck after, Mr. Looker and I more or less split the activities. I was concentrating on the commercial markets and Mr. Looker was concentrating on the aircraft market.

Q. Now, after Mr. Looker left, was there any change?

[fol. 748] A. Organizationally after Mr. Looker left, we eliminated the general position that I had held and in its place we set up divisional sales managers, who were responsible for both aircraft and commercial in a given geographical area.

Q. To whom were these divisional representatives responsible, what person?

A. To myself.

Q. And where were these divisional representatives located geographically?

A. Eventually, after we got the program started, they began by being located in Detroit for organizational training purposes, and we subsequently had a division office in St. Louis, which covered the midwest. We had a division office in Atlanta, Georgia, which covered the south. We had a division office in Philadelphia, which covered the east, and, of course, the western division was always a seperate division from the time I first joined the company and it was headquartered in Los Angeles.

Q. Within this divisional set-up, were there any salesmen assigned to the individual divisions?

A. Yes, in all instances.

Q. How did the salesmen operate?

A. Excuse me. Each salesman had a geographical area, a small portion within each division, for which he was responsible to promote the use and sale of the company's products.

[fol. 749] Q. In this divisional—well, let me ask you, how long did this divisional framework that you have just described to us last?

A. To the best of my knowledge, in recollection, it was still in effect when I left, sir.

Q. Now, you have mentioned the company's products.

What were the company's products during the time you were employed as vice president in charge of sales?

A. The company's products, during my period, were the lockbolts in many varieties. We had the commercial lockbolts. We had the aircraft tensile lockbolts. We had the aircraft shear-type lockbolts. We had also the specialized type of lockbolts that went into the Marine industry, the structural steel industry, the railroad car industry.

Q. Mr. Mathews, to what extent during this period of time were your personal efforts involved in selling for or encouraging the sale of lockbolts as opposed to any of the other company products?

A. Well, actually we never separated our activities in this manner. Our responsibilities in sales were to promote all the products of the company's manufacture.

It was necessary to exert just as much effort in blind rivets for the various industries which had been developed and a related amount of necessary tooling to keep the entire product of the factory sold, not just a segment of it. [fol. 750] Mr. Lipson: Your Honor, at this time the Government would like to inquire of counsel whether they have had an opportunity to examine Government's Exhibit No. 80, previously offered.

Mr. Haggerty: I thought it was 70.

Mr. Lipson: 80.

Mr. Haggerty: 80, you are right. Yes, we have, and we are ready to give you an answer on that. We have no objections to its admissibility.

Mr. Lipson: Thank you.

The Court: It may now be received.

Mr. Haggerty: This is our good-natured day.

Mr. Pomeroy: If the Court please, I understand this is the tabulation of sales figures furnished by the Defendant Huck. I have no objection to it, insofar as lockbolt sales are concerned which are the product of issue in this case.

There is also a column on another product, called blind rivets. I would object to that, as far as Townsend and Mr. Dickenson are concerned as incompetent, irrelevant and immaterial.

Mr. Lipson: Your Honor, the Government offers it solely for the figures relating to lockbolts and with no respect does it——

[fol. 751] The Court: (Interposing) I thought it was stipulated by both parties. I am sorry I admitted it prior to your objection, Mr. Pomeroy.

Are those figures for Huck alone?

Mr. Lipson: I believe they are.

Mr. Haggerty: They are for Huck alone.

The Court: All right. Then it is not admitted as far as any evidence of sales of——

Mr. Lipson: No, sir, no intention of that.

Mr. Pomeroy: Townsend Company.

The Court: Townsend Company, all right.

Mr. Lipson: Would you—with your Honor's permission, I would like to read a portion of this at this time.

It is titled (Reading):

"Total Annual Sales for Lockbolts and
"Blind Rivets in the U.S.A. and the
"Foreign Market
"January 1, 1950-September 14, 1960

Sales in the U.S.A.	Lockbolts
1950	$ 433,795.14
1951	1,444,834.55
1952	1,384,213.78
1953	1,250,626.64
1954	1,675,104.83
1955	2,659,130.77

[fol. 752]

1956	3,500,340.80
1957	5,036,785.03
1958	4,405,148.46
1959	5,530,418.32
1960	3,577,720.96
"Total	$30,898,119.28"

I will omit the column which is with respect to sales in the foreign market.

Q. (By Mr. Lipson) Now, Mr. Mathews, would you describe for us the manner by which prices were determined

for lockbolts within the Huck Manufacturing Company, to the best of your knowledge.

A. You mean, sale prices, sir?

Q. That's right.

A. To the best of my recollection, the cost department would prepare a spread sheet which would show the various products of the company.

It would also show the selling prices, the average selling prices that we had been selling the product for, and from these two figures we would have a proposed selling price that we should have to get the full margin of profit for the company.

And with the presentation of these sheets, there was [fol. 753] usually a meeting with the cost people, with management, and we would discuss the necessity of increasing prices.

Those which I participated in, to the best of my recollection, were usually a compromise. If production costs had increased on some items, due to various reasons, oftentimes sales did not feel they could—the market could absorb such selling prices and these were arbitrarily compromised and held at a lower figure.

Q. To what extent did Mr. Armour participate in these meetings?

A. Well, I don't recall a specific meeting, sir, or any specific meetings. But to the best of my recollection, I am sure, when he was there, he did participate in these discussions.

Q. You say, when he was there. Was this an unusual—was his presence or absence unusual?

A. No, it was routine normally as Tuesday and Wednesday of every week he was in the Detroit office.

Q. Was there any individual person in the Huck organization who had the final say on whether or not the prices would be in accordance with the recommendations of the committee?

A. The final approval, insofar as the sales department is concerned, normally came from my superior, Mr. Benkert, our executive vice president.

Q. And what is Mr. Benkert's position with respect to Mr. Armour; where does he stand in the company?

A. Mr. Armour was our president and Mr. Benkert was

[fol. 754] our executive vice president and general manager.

Q. Was there anyone between them and—in the chain of command, so to speak?

A. Not to my knowledge, no, sir.

Q. During the period of time you were employed by the Huck Manufacturing Company, both as sales manager and as vice president in charge of sales, what other firm manufactured and sold lockbolt devices?

A. Well, there was the Townsend Company; there was the Standard Pressed Steel Company; there was—Voi-Shan, I believe was the other licensee here in this country.

Q. Well, we are just interested in this country.

A. They were the three.

Q. Now, with respect to Standard Pressed Steel and Voi-Shan what kind of lockbolts did they manufacture and sell?

A. They were manufacturing the titanium lockbolts.

The Court: The what?

A. Titanium.

Q. (By Mr. Lipson, continuing) What kind of lockbolts did the Townsend Company manufacture and sell?

A. To the best of my knowledge, the Townsend Company sold and manufactured a complete line of lockbolt products.

Q. Are you familiar with a firm, or a division of a firm, known as the Cherry Rivet Division of the Townsend Company?

A. I know who they are, yes, sir.

[fol. 755] Q. Where are they located physically?

A. Their plant is located in Santa Ana, California.

Q. And they are part of the Townsend Company?

A. They—I understand it to be a diversion of Townsend Company, yes, sir.

Q. By the way, I don't believe I asked you, during the period of time when you were vice president in charge of sales of the Huck Manufacturing Company, can you recollect the industries to which lockbolts were sold?

A. Well, I can recall several of them. The aircraft industry, of course, continued to be a large user.

Within the aircraft—you—you want just the industries?

Q. Just the industries now, yes, sir.

A. The—during the growth period there, related in the

sales figures, there was considerable growth in the railroad car building industry, the building of freight cars and of passenger cars, the truck-trailer industry was a large user of lockbolts.

There was considerable usage in the industrial equipment industry, such as fans, blowers.

There was very excellent usage developing also in the shipyards for the Marine industry.

Q. With respect to the aircraft industry, now, do you recall any of the major customers during this period of time?

[fol. 756] A. Well, a few of them.

Q. The names and the locations, the geographic locations?

A. The Boeing Airplane Company at Seattle, in Wichita, Seattle, Washington and Wichita, Kansas; The Lockheed Aircraft Company at both Burbank and Marietta, Georgia.

Q. That's Burbank, California?

A. Burbank, California. I'm sorry.

Douglas Aircraft Company, Long Beach, California.

Those are the most prominent ones that come to mind.

Q. With respect to the railroad car building industry, do you recall any of the prominent customers during this period of time?

A. Yes, the Pullman Company in Chicago was a user of the lockbolts; the Southern Railroad in Spartanburg, South Carolina; the Missouri-Pacific Railroad in Missouri.

Q. With respect to the truck-trailer industry, do you recall the names of any of the prominent customers during this period of time?

A. Yes, Fruehauf Trailer Company in Avon Lake, Ohio and also their Memphis, Tennessee plant; Strick Trailer; Miller Trailer.

Q. Where is The Strick and Miller located?

A. I beg your pardon.

Strick is in Philadelphia, Pennsylvania and Miller is in Florida.

[fol. 757] Q. With respect to the industrial equipment industry that you mentioned, do you recall the names of any prominent customers there again during this period of time?

A. Well; Buffalo Forge in Buffalo, New York; Barry Blower in Minnesota.

Q. Now, with respect to the shipyards that you mentioned, do you recall any of the shipyards that were customers during this period of time?

A. Well, I think the New York Shipbuilding in New York City was one of them, the New York Shipyard there; I believe the Charleston, South Carolina yards and the Mare Island at San Francisco to be.

Q. Where were those lockbolts actually manufactured; where were they fabricated?

A. The manufacturing for Huck Manufacturing Company was here in Detroit at—on Bellevue.

Q. Now, how did they get them here in Detroit to these various places that you have mentioned?

A. They were shipped by both truck and by rail.

* * * * * * *

[fol. 758] Q. Mr. Mathews, while you were employed as vice president in charge of sales, to what extent was it part of your duties to be familiar with the comparable prices for similar lockbolts produced by the Townsend Company?

A. As a member of the sales management, it was quite essential for us to know what all competition in competitive products were doing in the field. This is the only way you could set up your marketing program, was know what the competitive parts which you were attempting to compete with were being sold for.

Q. Were you in fact familiar with the Townsend Company prices on similar lockbolts manufactured and sold by Huck?

A. I was familiar with all competitive prices at that time, yes.

Q. Was there any relationship between the prices charged by Townsend and the prices charged by Huck for the same or similar lockbolts?

[fol. 759] A. To the best of my recollection all printed prices were basically identical.

Q. Did this extent for any limited period of time while you were with Huck, or was this the general nature of your business throughout your stay?

A. To the best of my recollection the printed prices were that way during my entire time with them.

Q. Now, to what extent was it part of the Huck Manufacturing Company's policy to deviate from its printed prices and its standard pricing policy?

A. Well, there were occasions where a large competitive bid was coming up and there were deviations; to what extent is hard to answer. I don't recall any great number of them.

Q. Well were these relatively frequent, or infrequent?

A. I would say infrequent.

Q. How did you obtain knowledge about Townsend Company's prices?

A. Whenever a competitive price list was printed and distributed we were always able to acquire them, either by being on a mailing list of some of our competitors or by men picking them up in the field and forwarding them into us. The most frequent method was by the salesmen running into them in the field, and the customers' structure.

Q. Do you have any recollection how the Townsend Price List got into the Huck Company's possession?

[fol. 760] A. No specific recollection, no, sir.

Q. Do you know whether or not the Huck Manufacturing Company kept a file of Townsend prices on the same type of lockbolts that Huck made and sold?

A. We kept files during my time of all competitors, yes, sir.

Q. Who was charged with keeping this file?

A. As I recall it—it changed several times, due to our growth and expansion, and to the best of my recollection our comparative competitive prices were last being retained in the Cost Department.

Q. Well who was the individual who would be responsible for this?

A. I believe, to the best of my recollection, that Mr. Braund was when I left there, sir.

Q. Would you spell the name, please?

A. (Spelling) B-r-a-u-n-d.

Q. Did he have a title with the Huck Manufacturing Company?

A. I do not recall any specific title, no, sir. He was in——

Q. (Interposing) Is Mr. Braund present in the courtroom at this time?

A. I do not see him, no, sir.

Q. During the course of time that you were employed at Huck Manufacturing Company did the Huck lockbolt prices have occasion to change from time to time?

A. Yes, we had some price changes while I was there. [fol. 761] Q. In which direction did they change, up or down?

A. I believe we had some of both, sir. I think that there were some adjustments which reflected reduced prices, and I think—and I am certain that there were some that reflected increases.

Q. Do you recall which was more prevalent?

A. I could not say specifically, no, sir.

Q. On these occasions when the Huck prices changed were you able to note any changes in the Townsend Company's prices?

A. I don't specifically recall more than—other than to the best of my recollection they were identical all during the period, so I would assume that in the same general area of a price increase that they issued one which became public also.

Q. You gave us the year when you left the employ of the Huck Manufacturing Company. What was the specific date, can you recall that?

A. I believe it was September of 1960. I cannot give you the exact date, no, sir.

Q. Do you recall the circumstances surrounding your departure from Huck?

A. You mean the reason I resigned?

Q. That's right.

A. Yes, sir. I had been in the Detroit area for six years and the weather was not to the best of my or my family's [fol. 762] liking, and I received a better paying offer on the west coast from Rosan, Incorporated, and I accepted it and went out there.

Q. Did you inform the Huck management your intention to leave before you left?

A. Yes, I believe that—if my memory serves me correctly—that I notified the Huck, some 30 days before I left, and it may have been a little longer than that, sir.

Q. When you say you notified Huck, what individuals did you notify?

A. I believe I first notified Mr. Benkert who was my immediate supervisor, and I subsequently spoke with Mr. Armour about it.

Q. Did Mr. Benkert or Mr. Armour say anything to you about your departure—your leaving at that time?

A. Well to the best of my recollection we had several discussions attempting to see if there wasn't some way that I could continue. To the best of my knowledge my services had been satisfactory and they wanted me to stay on. I don't recall——

Q. (Interposing) Did they make any concrete proposals to you?

A. Actually no, because I did not—I told them right in the beginning that the decision had been made, that I had already accepted the other position and it was not something that was negotiable.

Q. Was there any offer on the part of either Mr. Benkert [fols. 763-764] or Mr. Armour of additional salary if you remained on?

A. I believe the offer was extended, but as I say, I was not interested in discussing staying on further.

Q. Was there any antagonism between yourself and either Mr. Benkert, Mr. Armour or anyone in the Huck Corporation?

A. No, sir.

Q. Is there any today?

A. No, sir.

Q. Mr. Mathews, I show you Government Exhibit marked for Identification No. 82. Can you tell us who wrote that letter?

A. I believe I did, sir.

Q. May I have it. Thank you.

Mr. Lipson: I now show Government Exhibit marked 82 to defense counsel for examination and possible objection.

Mr. Haggerty: For the purpose of the record we object to it as being within the two year period from and after September 14, 1954.

The Court: Mr. Pomeroy, the same?

Mr. Pomeroy: Yes, please.

The Court: The same as the other objections?

Mr. Pomeroy: That's right.
The Court: It may be received.

• • • • • • • •

[fol. 765] Mr. Lipson: Do you recall that letter, Mr. Mathews?

A. The only recollection I have of it is having read it, I do not recall the circumstances or anything behind it, sir.

Q. Mr. Mathews, have you ever had a chance to examine these lockbolt license agreements of September, 1954, between Huck and Townsend?

A. To my knowledge I am not familiar with it, no, sir.

Q. Do you know whether there is any clause or any part of that lockbolt license agreement which is GX-17, in this case, that would be the foundation for this kind of a proposed reciprocating agreement discussed in this letter of July 23, 1956?

Mr. Pomeroy: If the Court please, the agreement will speak for itself. It calls for a conclusion.

Mr. Haggerty: Further the witness says he has no familiarity with the agreement, so how can he answer the question?

[fol. 766] The Court: He may answer. Let's see.

A. I do not know the answer.

Q. (By Mr. Lipson) Mr. Mathews, was it part of your—let me make sure—the date on this letter is July 23, 1956, were you then sales manager or vice president in charge of sales?

A. This would appear to be probably about the time that I was appointed vice president in charge of sales. As near as I can recall, this would have been about the time that Mr. Looker was—had notified the company he was leaving and it was a transition period where we were both there; his not having left yet, and my just getting familiar with the activities of this office.

Q. Now was it part of your normal duties in that office to write letters of this kind to Townsend Company?

A. No, sir. Subsequently, with Mr. Looker's departure, my not being qualified to carry on the same scope of activity with regard to patents, licenses and so forth, this function

was transferred to the vice president in charge of engineering as far as the liaison with licensees was concerned.

Q. Now was the writing of this letter your idea or did you write it under someone's instructions?

A. I do not recall the circumstances of the letter.

Q. Well is it the kind of letter that you would have written on your own behest?

A. I do not believe so.

[fol. 767] Q. Who was your immediate superior at the Huck Manufacturing Company?

A. Mr. Benkert.

Q. Was there anyone besides Mr. Benkert and Mr. Armour who had authority to give you orders and what to do in your job?

A. No, sir.

Q. Mr. Mathews, at this time I would like to show you Government's Exhibit Marked No. 83, for identification.

Your Honor, here is a copy of that Exhibit. Could you tell me who wrote this, or under whose authorization it was written?

A. I wrote it, sir.

Mr. Lipson: I now show Government's Exhibit No. 83 to defense counsel for examination and possible objection.

Mr. Haggerty: No objection to it, but we notice on it are some red pencil marks, and that will not be considered part of the Exhibit.

Mr. Lipson: It is offered with the red pencil marks, sir.

Mr. Haggerty: It is offered with the red pencil marks. Then I object to it in the absence of an explanation.

Mr. Pomeroy: If the Court please, I object further for the reason that the copy of this document, which the Government furnished to us under motion and stipulation had no markings on it whatever, and was more—different J [fols. 768-769] number, the number being furnished us was J 3460.

Mr. Haggerty: This is J 2092.

The Court: It may be received.

Mr. Pomeroy: May we ask then to have a—be now furnished with an accurate copy of the Exhibit the Government is tendering?

The Court: Is the copy——

Mr. Lipson: (Interposing) I have, your Honor, one ad-

ditional photo copy. I am quite sure that the defendants were furnished with a photo copy of Document J 2092. We have just given them another copy of it, but I am convinced in my own mind that——

Mr. Pomeroy: (Interposing) Well I am saying to the contrary, Mr. Lipson.

Mr. Lipson: I would like, at this time, to read to you——

The Court: (Interposing) It may be received anyway.

. . . . . .

[fol. 770] Mr. Lipson: I show you Government Exhibit 83, once more, Mr. Mathews, and ask you if you can identify the handwritten notation in the margin; have you ever seen that handwriting before?

A. It would appear to be that of Mr. Benkert.

Q. Thank you. I will now read this handwritten notation in the margin.

"Letter released 9-18-56," and an initial. Can you identify the initial that appears after that notation?

A. This appears to be Mr. Benkert's initials.

Q. There is a reference in this document to Hubert; can you identify who Hubert is. "Would you please call Hubert," is the phrase.

A. That refers to Forest Hubert, who owns the F. B. Hubert Company here in Detroit, who were our advertising [fol. 771] counsellors and agency during that time.

Q. What would Hubert have to do with the matter referred to in Government Exhibit 83?

A. He handled all of the layout, art work, proof reading and printing of our literature and price lists.

Q. What kind of literature do you refer to in this memo? There is a reference to literature in the third paragraph, would you like to see it to refresh your recollection?

I am sorry, it is the second paragraph.

A. That is not exactly clear to me. That could have been either he did both illustrative literature with regard to products and price sheets. There could have been two subject matters in the same memo.

Q. Thank you. With respect to the handwritten notation about the letter released 9-18-56, do you know what letter that refers to?

A. I would presume it is the announcement letter to the customers. That is the normal follow-up to any price change.

Q. Now was this idea of arranging with Townsend to make new prices effective on a particular date your idea?

A. I am certain it wasn't my idea, no, sir.

Q. Were you acting under any instructions from anyone?

A. I don't recall specific instructions from anyone. I can only assume where I submitted a letter requesting approval that there had been some instructions to do so.

[fol. 772] Q. And from whom were those instructions more likely to have come?

Mr. Haggerty: I object to the form of the question.

Q. (By Mr. Lipson) From whom were those instructions —Strike that.

From whom might those instructions have come?

A. They most probably would have come from Mr. Benkert.

Q. By the way, Mr. Mathews, do you recall the specific nature of the price changes referred to in Government Exhibit No. 83?

A. I do not, sir.

Q. At this time, I would like to show Exhibits No. 84, 85, and 86 to you for the purpose of refreshing your recollection.

A. (Witness reviews exhibits.)

Q. Have you refreshed your recollection, Mr. Mathews?

A. I have, sir.

Q. Do you now recall the nature of the previous changes involved in Government Exhibit No. 83?

A. By nature, I—I don't know if I understand correctly what you mean.

Q. What were the items of price involved?

A. The items of price involved in this change here involved the complete line of blind rivets and lockbolts.

Q. With respect to lockbolts, now, was it—what was it? Is there any more specific recollection you have of the [fol. 773] type of pricing involved in this change?

A. No, the only thing this refreshes in my mind actually, as far as the change itself is concerned, was this was the change-over period when the freight allowed was added as

a change in policy; also it is when the western pricing was first established.

Q. Now, what is freight allowed? What are you referring to?

A. By freight allowed, this was where the company paid the freight to the customer's plant by carrier of the company's choice, providing they met the minimum requirements of poundage. Previously it had been a responsibility and cost to the customer to pay for the freight.

Q. I now show you Government Exhibit No. 84. I ask you if you can identify what that document is?

A. I can, sir.

Q. What is it?

A. It's a rough draft of a proposed announcement letter to the customer structure.

Q. Does it purport to bear a date?

A. It does, sir.

Q. What is that date?

A. September 14, 1956.

Mr. Lipson: I show Government Exhibit No. 84 to defense counsel for examination and possible objections.

Mr. Haggerty: No objection.

[fols. 774-775] Mr. Pomeroy: No objection.

The Court: It may be received.

* * * * * * *

[fol. 776] Mr. Lipson: What relation does this exhibit 84 have to the prior exhibit, 83, your memo, your memo to Mr. Benkert?

A. I would assume that this is the letter referred to in the previous exhibit which for the notation——

Q. (Interposing) I now show you Government Exhibit, marked number 85, and ask you if you can identify this.

The Court: You might give him the exhibit.

A. Yes, I can, sir.

Q. (By Mr. Lipson, continuing) Well, what is 85?

A. 85 is an interdepartmental correspondence to all engineering representatives, which would be our field sales force.

Q. And what is 86?

A. And 86 is the customer price adjustment announcement letter.

The Court: To the customer?

A. Yes, sir.

[fol. 777] Mr. Lipson: I show Government Exhibits marked 85 and 86 to defense counsel for examination and possible objection.

The Court: Is there any objection?

Mr. Haggerty: For the purpose of the record, may it please the Court, we object to both tendered exhibits, 85 and 86, for the reason they are not within the period of the statute of limitations.

The Court: Mr. Pomeroy, the same——?

Mr. Pomeroy: (Interposing) I would join that, your Honor. This was also true of Exhibit 84 which may——

The Court: (Interposing) You may have your objections. It may be received.

Mr. Lipson: Your Honor, before I make any attempt to read either of these, I would like to go back to Government Exhibit 84, the letter that we were just discussing, the proposed letter that we were just discussing. There was some handwritten notations that I did not bring to the Court's attention on that letter that I would like to do.

In the lefthand margin I notice there are some pencilled notations which I cannot decipher. Apparently they were scratched out, written at one time and scratched out, but in the upper margin is the pencilled notation "mail Tuesday, 25th."

Q. (By Mr. Lipson, continuing) Government Exhibit No. [fol. 778] 85 appears on Huck's Manufacturing Company departmental correspondence, dated September 25, 1956.

(Reading):

"Subject: Price Adjustment-Pricing Policy—Effective October 1, 1956.

"To All Engineering Representatives

"Copies A. W. Armour, Benkert, Messer, Tenny, Kruse, Westrick, Welch, Albritton, Brilmyer, Van Hecke, File * * *".

File is circled in pencil.

(Reading, continuing):

"C. Armour, Dobbe."

I don't believe that all of these names have been identified. Who is Mr. Messer?

A. Mr. Messer was midwestern division sales manager.

Q. And Mr. Tenny, who was he?

A. He was the eastern division sales manager.

Q. Who was Mr. Kruse, (spelling) K-r-u-s-e?

A. Mr. Kruse was order correspondent, I believe, at that time in the sales office here in Detroit.

Q. And who is Mr. Westrick?

A. Mr. Westrick was manager of the order department.

Q. And Mr. Welch?

A. Mr. Welch was Mr. Westrick's assistant.

Q. And Mr. Albritton?

[fol. 779] A. Mr. Albritton was in charge of manufacturing.

Q. I think Mr. Brilmyer has already been identified, Mr. Van Hecke?

A. He was in charge of the tool division.

* * * * * * *

[fol. 780] Mr. Lipson: What does that mean, GQM, EK? Or would you prefer to see it before you reply? I show [fol. 781] it to the witness.

A. This would indicate that this letter was signed in my absence by Ed Kruse, who was at that time in the sale office doing this type of work for us.

Q. Was he authorized to do that kind of thing?

A. Yes, sir.

Q. Government Exhibit No. 86. It is written on stationery bearing the imprint (reading):

"Huck Manufacturing Company
"Specialists in Cold Heading
"Riveting and Fastening Processes
"2480 Bellevue Avenue
"Detroit 7, Michigan."

It is dated September 25, 1956.

(Reading, continuing):

"To Our Customers:

"Subject: Price Adjustment."

I will omit reading the entirety of the letter. I show it to you, Mr. Mathews, and ask you if this is the final version of the proposed letter to all Huck customers that we previously read?

A. This appears to be the final of the previously read document, yes, sir.

Q. Do you recall—well, let me show you the previously read document and ask you if there are any substantial [fol. 782] differences between the drafts and the final?

The Court: The witness is through reading it.

A. No, there are not, sir.

Q. (By Mr. Lipson, continuing) Thank you. With that, you save me the burden of reading the document.

A. I wouldn't make a good reader today, I don't think.

Q. Mr. Mathews, do you recall how often Huck Manufacturing Company had a price rise in lockbolts? Was there a general period or a periodic interval?

A. I don't recall any fixed period or periodic interval. There were probably, during the six years I was there, at least three or four increases or price changes.

Q. Do you recall whether or not there were increases that followed on each other as quickly as six months?

A. I don't specifically recall any that followed as quickly as six months, no, sir.

Q. Do you recall any that followed even quicker than six months?

A. No, I don't.

Q. Do you recall any that followed closer together than a year?

A. I don't have a specific recollection, no, sir.

Q. I am referring to lockbolts.

A. I believe I—I understand it, yes, sir.

Q. At this time, I would like to show you Government Exhibit, marked for identification, No. 87, and ask you if you can identify it? It's a two page exhibit. Yes,——

[fols. 783-785] A. Yes, I can identify it.

Q. Would you, please?

A. The top sheet or page of Exhibit 89 is an interdepartmental correspondence letter relating to a price adjustment.

Q. And the second sheet?

A. And the second sheet is an announcement letter of the price adjustment to the customers.

Mr. Haggerty: Pardon me, is that Exhibit 87 or 89?

Mr. Lipson: 87.

A. 87.

Mr. Lipson: I now show Government Exhibit, marked No. 87, to defense counsel for examination and possible objection.

Mr. Haggerty: No objection.

Mr. Pomeroy: I have none.

The Court: It may be received.

• • • • • • •

[fols. 786-787] By Mr. Lipson: Mr. Mathews, if memory serves, you had, prior to lunch, just identified Government's Exhibit No. 87, which I show you now. Is that the exhibit that you had seen before?

A. Yes, sir.

Mr. Lipson: I show Government Exhibit No. 87 to defense counsel for examination and possible objection.

Mr. Haggerty: No objection.

Mr. Lipson: Thank you.

Mr. Pomeroy: We have none.

The Court: It may be received.

• • • • • • •

[fol. 788] Q. Mr. Mathews, I want to show you Government Exhibit No. 85, which was the price adjustment effective October 1, 1956, and Government Exhibit No. 87, which we have just been speaking of, which is a September 1, 1957, general price adjustment, and ask you to look at both these documents.

I would like to ask you if you can tell me whether there was a price adjustment, price increase or decrease for the Huck lockbolt line at any time between those two dates?

A. I do not recall another one, no, sir.

Q. Thank you, Mr. Mathews. Mr. Mathews, during the [fol. 789] time when—well, let's confine it to the period of time when you were employed by Huck, the entire period of time from 1954 through 1960.

Were you familiar with the method used in mailing out price lists, Huck lockbolt price lists to customers of Huck?

A. By the method, you mean, the procedure used internally?

Q. Exactly, right.

A. To the best of my recollection we, in the early days, the early part of my employment there, used an Addressograph system, wherein customers' names were recorded on addressograph plates and these were catalogued in the storage cabinets by a product line. If this customer is using lockbolts, blind rivets in the full line, then they were in one category.

If they were just users of aircraft lockbolts, they would have been in another.

And when price changes came up, the clerical people would take the category of addressograph plates that applied to the particular price list to be mailed out, and this was the basic basis for the distribution list that would receive this price list.

Subsequently I believe this was done on the I.B.M. machines.

Q. When you say "subsequently", can you recall the [fol. 790] approximate period of time when this switch was made from Addressograph to I.B.M.?

A. I believe this to have been in '56 or '57, but I cannot be certain.

Q. Well, during the Addressograph period, what department of the Huck Manufacturing Company had responsibility for sending out these price lists?

A. This was a part of the sales department.

Q. And subsequently, which department would have the responsibility?

A. Well, the clerical responsibility would then be under the accounting department, where the I.B.M. department reported.

Q. Do you recall the names of any of the individuals who

actually did the job of sending out these price lists during the Addressograph period?

A. It would have probably been under the guidance of either Mr. Kruse or possibly Mr. Welch. The actual function was done by the girls, and I do not recall any of their names, sir.

Q. You say "by the girls". Are these secretarial personnel you are referring to or clerical—

A. (Interposing) No, these are clerical people, typists and girls, file clerks.

Q. I show you Government Exhibit marked No. 88, and ask you if you have ever seen this kind of a memorandum, [fol. 791] this format before?

Mr. Pomeroy: You mean, before today?

Mr. Lipson: That's right.

A. You mean the basic form itself?

Q. (By Mr. Lipson, continuing) That's right.

A. Yes, I have, sir.

Q. Who used this form?

A. Mr. Benkert.

Q. I direct your attention to the lower righthand corner of the document. Do you recognize any writings in that lower righthand corner?

A. I believe to be Mr. Benkert's initials, sir.

Mr. Lipson: May I have Government Exhibit 88, please?

Q. (By Mr. Lipson, continuing) Oh, I omitted asking you, does the document purport to bear a date?

A. It does, sir.

Q. What date?

A. November 7, 1956.

Mr. Lipson: Thank you. Before offering this, I show this to defense counsel for examination and possible objection.

Mr. Haggerty: For the purpose of the record, I object to it as not being within the period contained in the information.

[fol. 792] Mr. Lipson: I am sorry. I don't understand Mr. Haggerty. It does purport to bear a date.

Mr. Haggerty: It doesn't purport to bear——

Mr. Lipson: (Interposing) It does purport to bear a date.

Mr. Haggerty: November the 7th, 1956.

Mr. Lipson: That's my understanding, as well.

Mr. Haggerty: It is not within the period of the statute of limitations.

Mr. Lipson: Your Honor, this is within a five year period before October 24, 1961, which, I believe is the date of the indictment.

Mr. Haggerty: You know, my mathematics are bad. I withdraw my objection.

The Court: I was thumbing through my notes to see the indictment date, too, and I was wondering about that.

Mr. Haggerty: It's October the 24th, '61, your Honor.

The Court: All right.

Mr. Haggerty: I have no objection.

Mr. Pomeroy: I have none.

The Court: Pardon?

Mr. Pomeroy: I have no objection, sir.

The Court: It may be received.

• • • • • • •

[fol. 793] Mr. Mathews, have you ever seen this document prior to this date?

Let me show it to you once more. 88.

A. I—you said prior to this date?

[fol. 794] Q. That's right.

A. The only recollection I have of seeing this document was when you and I went over it. I undoubtedly had a copy of it, because I am shown on here for receiving one, but I do not recall anything particularly pertaining to it at the time of its issuance.

Q. Thank you. Mr. Mathews, do you know of any reason why the executive vice president of the Huck Manufacturing Company took over what you previously described as a clerical job of sending price lists out of Huck Manufacturing Company?

A. I do not, sir.

Q. Do you know of any reason why a change of this nature would have been the subject of a memorandum to the president of the company, Mr. Armour?

A. I do not, sir.

Q. I believe that you have previously identified for us Mr. Braund, associated with the Huck Manufacturing Company? Is that—or have you? Maybe my memory is failing.

A. We—I believe we identified who he was in the company, yes, sir.

Q. Do you know, Mr. Mathews, whether Mr. Braund—that is, H. C. Braund, had any duties or responsibilities with respect to exchanging price information with the Townsend Company?

Mr. Pomeroy: That is objected to as leading.

Mr. Lipson: Well, I will withdraw the question, then.

[fol. 795] Q. (By Mr. Lipson, continuing) Is Mr. Braund in this court room now? Do you see him?

A. Yes, sir.

Mr. Lipson: Your Honor, at this time I would like to make Government's Exhibits marked 89, 90 and 91, available to defense counsel for examination and possible objection before offering them.

Mr. Pomeroy: If the Court please, speaking for Townsend Company and Mr. Dickenson, I have no objection to the proffered exhibits, although I would like to point out for the record that neither of these, none of these three documents, nor Exhibit 88, previously admitted, was submitted by the Government in response to a motion to produce under the rules of criminal procedure and the stipulation which followed, so that we did not know until today that they were intended to be offered.

Mr. Lipson: Your Honor, in connection with that, the stipulation under which the documents that were turned over to the Defendants were turned over were—that dealt with the documents that the Government intended to introduce at that time.

Mr. Pomeroy: That was the stipulation. I am not making any objection.

Mr. Lipson: No, no.

[fols. 796-799] The Court: He is merely commenting, as far as I can see, so far.

Mr. Pomeroy: That is right.

Mr. Lipson: Being no objection, I withdraw my remarks.

The Court: Mr. Haggerty?

Mr. Haggerty: No objection to the three tendered exhibits.

The Court: They may be received.

• • • • • • •

[fol. 800] Mr. Lipson: Do you know what position Mr. Horst held at that time, that period of time in 1957?

A. The—to the best of my knowledge, Mr. Horst held the position of assistant to the president throughout the entire period of my acquaintanceship.

Q. Do you know what position Mr. Chilcoat held at that time?

A. To the best of my recollection, Mr. Chilcoat was sales manager for the Cherry Rivet Division. His exact title I don't exactly recall, no, sir.

Q. And Mr. F. R. Dickenson?

A. Mr. Dickenson was president of the Townsend Company.

• • • • • • •

Q. Mr. Mathews, I show you Government Exhibit marked No. 92, and ask you to examine t.

A. (Witness complies.)

[fol. 801] Q. Have you examined No. 92?

A. I have, sir.

Q. Do you recognize the signature?

A. I do, sir.

Q. Whose is it?

A. Mine.

Mr. Lipson: I show Government Exhibit No. 92 to defense counsel for examination and possible objection prior to offering it.

Mr. Haggerty: No objection.

Mr. Pomeroy: I have none.

The Court: It may be received.

• • • • • • •

[fol. 802] Mr. Lipson: Do you recall the incident described in this Government Exhibit 92?

[fol. 803] A. I do, sir.

Q. Who is Ed Stau?

A. Ed Stau was the vice president and general manager of the Olympic Screw & Rivet Company.

Q. Do you recall him ever making the kind of request referred to in this letter?

A. As I recall the background of this particular letter, there had been numerous reports from my salesmen in the field throughout the customer structure that Olympic had developed a new lockbolt that was going to be marketed very shortly.

While we had not seen any such bolts, this repeatedly came to our attention and, as I recall it, I received a telephone call, first from Mr. Stau's office on the West Coast, telling me that he was going to be in Chicago—it was in conjunction with a show or something—and that if I would like to see his new lockbolt, that he would be glad to set up a meeting with me.

I discussed this with our management, and I was advised that, in having such a meeting, that it would be necessary that it be clearly understood that nothing was being accepted in confidence.

With this, as I recall it, a letter was written for my signature to Mr. Stau, pointing out that it would have to be understood that any meeting with him regarding any new developments he had would have to be without any strings [fol. 804] attached to them. It would not be accepted in confidence.

From this, I believe, there was a letter from Mr. Stau then, saying that I had misunderstood his intent, and really what he wanted to talk about was getting a license from Huck.

And with that, this letter was written, explaining to him that we were not in a position at that time or in—we were not at that time considering additional licenses.

Q. Did you write this letter on your own behest?

A. I would say I did, yes, sir.

Q. Did you have any opportunity to consult any of your superiors prior to writing this letter?

A. I am certain that I did, but to specifically say there

was a meeting held or anything, I could not answer that, because I had consulted with my superiors previously and in setting up the previous letter that I had written to Mr. Stau explaining that I could not accept anything in confidence.

Q. By the way, is Mr. Stau here in the court room today?

A. He is, sir.

Q. Mr. Mathews, I now show you Government Exhibit marked No. 93, and ask you to examine it. It is a two page document. Will you examine both pages, please?

A. (Witness complies.)

Q. Who wrote each of those letters?

[fols. 805-807] A. I beg your pardon, sir?

Q. I say, can you tell me who wrote each of those letters?

A. I wrote them, sir.

Q. May I have them, please?

A. (Hands exhibits to Mr. Lipson.)

Mr. Lipson: Prior to offering these letters, Government Exhibit No. 93, I will show to defense counsel for examination and possible objection.

Mr. Haggerty: No objection, may it please the Court.

The Court: Mr. Pomeroy?

Mr. Pomeroy: No objection.

The Court: It may be received.

* * * * * * *

[fol. 808] Mr. Lipson: The first page of the letter has a distribution list on it, which I will read to you and ask you, Mr. Mathews, to identify the position held by each of these gentlemen, as I read their names in the distribution list.

Armour?

A. President of Huck.

Q. Benkert?

A. He's vice president of Huck.

Q. Reynolds?

A. Mr. Reynolds is an officer in the company, and I don't remember his exact title. I think it was treasurer.

Q. Stern?

A. Mr. Stern was secretary of the company.

Q. Is Mr. Stern in the court room today?

A. Yes, he is.

Q. Clute?

A. Clute was a division manager.

Q. Scott?

A. Scott was an engineering representative in the local [fol. 809] San Francisco area out there, I believe.

Q. Westriek?

A. Westrick was manager of the order department.

Q. Villacres?

A. Villacres was Western Division manager.

Q. T&C File?

A. T&C File was a Terms and Conditions, Terms and Contract File that I maintained.

Q. File?

A. And the file was a general sales file.

Q. Dickenson?

A. Mr. Dickenson is the president of the Townsend Company.

Q. I show you the distribution list on the second letter attached.

Is that the same distribution list or are there any differences?

A. There are differences.

Q. What are the differences?

A. We have Mr. Tenny on the one letter. He was the Eastern Division manager. We have Mr. Hugin, who was also—an engineering representative, handling this particular account, shown in this letter, and we have Mr. DeLoach, who was the Southern Division manager and who had the third Lockheed Plant, which was down at Marietta.

Q. Are all the other names that were on the first letter [fol. 810] also on the second letter?

A. They are.

Q. Do you recall any discussion with respect to the six-month price—well, to the six-month firm price guarantee between Huck Manufacturing Company and any of its customers during your tenure as vice president in charge of sales?

A. Well, this was one of the big items in the particular document we—we were just looking at.

Prior to this negotiation with Mr. Warren, I believe the Lockheed agreement had a twelve-month price protection and, due to the continual creep in the cost of manufactur-

ing, we were no longer able to guarantee twelve-month price protection on orders.

Q. As a result, we were successful in negotiating with them and, to the best of my knowledge and recollection, there were eight or ten other companies that we had special terms and conditions negotiated with.

Normally, it—it centered in our change with—it was set off as a chain reaction by the change in our basic policy when we discontinued the twelve-month price protection as a basic selling policy.

Q. Did you put Mr. Dickenson's name on the distribution list of these two letters?

A. I did not.

Q. Mr. Mathews, are you aware of any occasions when [fol. 811] Mr. Armour and Mr. Dickenson met together while you were employed by the Huck Manufacturing Company?

A. Yes, I am.

Q. What occasions were these, starting from the earliest you can recall?

A. I believe there was an occasion when Mr. Armour and myself visited the Townsend Plant in New Brighton, at which time we met with Mr. Dickenson and at which time, to the best of my recollection, was my first trip through their new facility they were not completely moved into yet.

Q. What was the approximate date of that visit?

A. I would presume it was probably in '56 or '57.

Q. When was the next time that you knew Mr. Armour and Mr. Dickenson met to your knowledge, personal knowledge?

A. I cannot recall well enough to say that they were in sequence. I only remember vaguely that possibly two or three times they were together. I have a recollection of a meeting in Chicago.

Q. About what year was that?

A. This would have been probably in '57, possibly '58. My only real recollection of this meeting was that the Townsend Company had developed a new electric power tool for installing fasteners up through half inch, and we had spent considerable development time and monies in

trying to get a power tool which you can plug into any 110 outlet.

[fol. 812] And Mr. Benkert and myself went to Chicago, and, I believe, Mr. Buster was there.

Q. Who is Mr. Buster?

A. Mr. Buster is vice president and general manager of the Cherry Rivet Division of Townsend, and I believe Mr. Ketchum.

Q. Would you identify him, please?

A. Mr. Ketchum, I can't tell you his title. He heads up, I believe, engineering and art research and development for the Cherry Rivet Division of Townsend.

And Mr. Armour, and, I believe, Mr. Dickenson was at that meeting. It seems to me like there was a time or two that Mr. Dickenson visited our facilities, but I have no specific recollection of a meeting of any kind that——

Q. (Interposing) Which particular facility do you mean?

A. The Huck facility here in Detroit, but I have no specific recollection of a particular meeting or anything like that.

Q. Mr. Mathews, do you recall meeting with any Townsend personnel where Mr. Dickenson and Mr. Armour were not present?

A. Yes, there was a previously testified to meeting that Mr. Looker and I traveled to the Townsend Company.

I was also with Mr. Looker when we made the presentation at the meeting, the sales meeting in Homestead, Virginia.

Q. When you refer to the visit with Mr. Looker at the Townsend Company, is that the one where there was some [fol. 813] testimony about freight equalization?

A. That is correct.

Q. Do you recall any other meetings?

A. It seems to me like there was another meeting that we had in New Brighton. I do not recall now who accompanied me from Huck Manufacturing Company, but I recall it—the gist of our problem was that they were not moving ahead fast enough with the development of the larger diameter lockbolts and we were pursuing with them the developments they had made to date in producing the half inch, and the 5/8" diameter lockbolts.

Q. You recall the year in which this last meeting took place?

A. It would probably have been in 1957, but I cannot say for sure.

Q. Do you recall—I am sorry. I thought you had completed your answer.

Do you have any other recollection?

A. I have a recollection of at least two visits to the Cherry Rivet Division's Plant in Santa Ana.

Q. Could you relate this by time?

A. The first occasion that I visited there was sometime shortly after Mr. Looker had resigned, and I had taken over, which again was my first visit to get acquainted, to see their facilities and meet the personnel at the Cherry Plant.

The only other visit that I recall being at the Cherry [fol. 814] Plant was with regard to a collar problem we were having, in that they were manufacturing steel collars, and they were buying steel collars from us, and this was confusing my ability to deliver to my customers.

And I was trying to encourage them to get moving on this phase of their work.

Q. What was the approximate time of this visit, the steel collars?

A. It would probably have been in '57 again, sir.

Q. Do you recall whether any officials of the Townsend Company visited the Huck facilities while you were present, apart from the already testified to incidents?

A. Yes, I remember—I have a recollection of the two boys from Cherry traveling to Detroit, meeting with us in Detroit, I should say, at the plant, and I can't tell you the year, to be honest with you, but I recall it because they had developed a new locked spindle rivet, and they were showing it to us to see if we were interested in taking a license to make this rivet.

Q. You say the "boys". Can you remember any of the individuals?

A. I know Milo Ketchum was there. Who accompanied him, I can't tell you for sure.

From our end of it, we would—we probably had our various department heads in from manufacturing and I know that Mr. Brilmyer was there, because I recall that

[fol. 815] Mr. Ketchum went down into the shop with Mr. Brilmyer and showed him how the rivet functioned and, I believe, actually installed some for him and left them, so that Huck could run tests on the parts.

Q. These were not the lockbolts, I take it?

A. No, these were locked spindle blind rivets.

Q. Do you recall any other meetings of this nature—that is, where the Townsend People came to the Huck facility?

A. I do not recall other meetings, no, sir.

Q. Do you recall a person named John Roy?

A. Yes, I do, sir.

Q. Who is John Roy?

A. Who is he?

Q. Well, whom do you remember him as having been?

A. I remember John Roy as having been with the Cherry Rivet Division of the Townsend Company, and, I believe his capacity there, when he left, was sales manager.

Q. Is Mr. Roy in the court room today?

A. Yes, sir.

Q. Do you ever recall ever having had a meeting with Mr. Roy while he was an official with Townsend?

A. I do not specifically recall a meeting with Mr. Roy. I did some research and Mr. Roy did visit our facility, along with two other gentlemen from Cherry.

I do not recall their names at the moment.

[fol. 816] This, I believe, was somewhere in the early part of 1960, and by "our facility" I mean the Huck Hawthorne Branch in Hawthorne, California, but I do not recall the meeting and the only occasion I do recall that any of the Cherry people came out to our facilities was—we did have a tool orientation program going out there, with the line of hydraulic lockbolt tools.

This was fairly new to our own people out there and it seems to me like their—I recall the Cherry people coming in for viewing this, with an eye to how they might use it in their own sales promotion.

Q. May I ask you a question? You are from Southern California now, I understand, from your earlier statement?

A. At the present time I am, yes, sir.

Q. Right. What is the geographical relationship between Hawthorne and Inglewood?

A. Well, without having ever clocked it, I would say

that Hawthorne and Inglewood are probably five miles apart.

The——

Q. (Interposing) That's a sufficient answer——

A. (Interposing) That's sufficient?

Q. (Continuing)—for the purposes of the question.

Do you ever recall meeting Mr. Roy on any other occasion?

A. Yes, I met—on my early visit to the Cherry Rivet Division that I previously mentioned, while Mr. Chilcoat [fol. 817] was still in charge of sales at Cherry, Mr. Roy was there then and I met Mr. Roy at that time.

Q. Did you ever meet him on any other occasions?

A. I do not have a recollection of having met him on other occasions.

Would it refresh your recollection if I reminded you of the Boeing Wichita Plant?

A. I do not specifically recall his being down there, no, sir.

Q. Do you recall any Townsend personnel meeting with you at that place?

A. Yes, I remember that, but——

Q. (Interposing) About what time was it; do you know?

A. Milo Ketchum was down there. Well, this could have been anytime. I would again have to say that it's probably '57 or '58.

Q. Do you recall having had any conversations over the telephone with Mr. John Roy?

A. I do not recall any, no, sir.

Q. What was the nature of this function in Virginia that you and Mr. Looker went to that has come up several times?

A. Well, to the best of my recollection, Huck, as a licensor, was not too happy with the lack of sales on the part of the licensee. It didn't seem like they were getting started, whether they were going out and generating new business and expanding the market, and they had their [fol. 818] national sales meeting coming up from the Townsend Company and they invited the licensor to use this opportunity to try and teach their people the proper or, at least, the Huck method of presenting the product

and to discuss the basic industries that the product applied to.

And, as I recall it, we had some hour or hour and a half on the program, and this was the entire thing. We were not in the meeting per se, other than for the time that we were on, from 3:00 to 4:30, or whatever the time was.

Q. This is the oration that we have previously heard of?
A. This is the oration we have previously talked about.
Q. Did you participate in the oration?
A. Yes, I did, sir.
Q. You participated?
A. Yes, sir.

The Court: Let's recess here. We will take a recess.

(Whereupon, a short recess was taken.)

[fol. 819] AFTER RECESS

GEORGE Q. MATHEWS, a witness called on behalf of the Government, having been previously duly sworn, resumed the witness stand and testified upon his oath, as follows:

The Court: You may proceed.

Mr. Lipson: Thank you, your Honor. I have no further questions on direct examination, of Mr. Mathews.

Mr. Haggerty: Perhaps you can help me. I am looking for Exhibit No. 87. Do you know which pile you put them in?

Mr. Esherick: I just put them in order for your benefit, Mr. Haggerty; they are all in order.

Mr. Haggerty: That is dangerous, when I do it.

Mr. Lipson: Maybe Mr. Esherick better find it, if he put it in order.

Cross-examination.

By Mr. Haggerty:

Q. Referring to the Government's Exhibit 87, Mr. Mathews, which doesn't mean a thing to you sitting up there on the witness stand, but to refresh your recollection it consisted of two sheets. One——

A. (Interposing) Yes, sir.

[fol. 820] Q. (Continuing) —is a model letter to be sent to the customers?

A. Yes, sir.

Q. Now this letter was read in part by my brother, but I will read the entire letter. It is on the stationery of the Huck Manufacturing Company, and this letter was drawn up by yourself?

A. I could not testify that I actually drew up the letter; it was drawn up in my department.

Q. But you approved of it?

A. I approved of it, yes.

Q. Yes. And it is August 30, '57. To our customers. Subject: Price Adjustment.

> "Effective September 1, 1957, a general price adjustment will be made on Huckbolt fasteners, Blind Huckbolt fasteners, Oversize Structural Blind rivets, Tau Bolts and Daisy blind rivets."

Incidentally, that part—that part was read by my brother. Incidentally, what are "Tau" (spelling) T-a-u Bolts?

A. This was a tradename that we applied to a shear-type blind bolt.

Q. Well now that don't mean much to me, and I doubt if it does to the jury. It is a shear-type blind bolt?

A. Yes, sir.

[fol. 821] Q. I guess we will have to settle for that. Now, —And what is a Daisy blind rivet?

A. This was a rivet developed specifically for the building trade, which was a pre-assembled two-piece rivet that was installed from one side of the sheet, had a characteristic of—splitting on the blind side to form a joint, and the configuration of it had the appearance of a daisy, so we had adopted the tradename Daisy to identify this.

Q. That is the stem would split?

A. No, the sleeve would split.

Q. All right. The sleeve would split?

A. That's right.

Q. And it would spread out and lay flat then against some object?

A. Right.

Q. Like the petals of a daisy,——

A. (Interposing) Yes, sir.

Q. (Continuing) —is that it?

A. Yes, sir.

Q. "This adjustment will reflect the general price increase of aluminum and steel, as well as cost of labor and supplies.

> "We are pleased to report that due to your increased acceptance of our various product lines,"—and what I am reading now has not been read—
> [fol. 822] "we have in some cases been able to effect a price reduction."

In other words, while the price was up on some articles they were able to reduce the price on others, it that true?

A. That is correct.

Q. And then it goes on and appreciate your cooperation and so forth.

You have testified that in your capacity as vice president in charge of sales, it was essential that you have all information possible on all competitors of the lockbolt, is that true, and of your products?

A. Yes, sir.

Q. And you obtained that information from various sources; you stated you obtained it sometimes from a customer who would give you a price list of a competitor, right?

A. Yes, sir.

Q. And at other times your men in the field would actually get—obtain the price from some source or other, is that true?

A. Yes, sir.

Q. Then there would be a compilation of that information for your benefit; a compilation of the prices of your competitors was kept,——

[fol. 823] A. (Interposing) Yes.

Q. (Continuing) is that true? And that was kept for the purpose of knowing what your competitors were charging for anything that was in competition—any article that was in competition with the lockbolt, isn't that true?

A. Yes, sir.

Q. Now, do you recall if you kept price lists on Hi-Shear Rivets?

A. We did, sir.
Q. Of your competitors?
A. Yes, sir.
Q. Did you on the "Briles" taper lock?
A. We did.
Q. Did you keep them on the Hi-Lok?
A. We did, sir.
Q. Did you keep them even on AN bolts and nuts?
A. We did.
Q. Now what are AN bolts and nuts?
A. The AN designation is an Army-Navy specification which sets up certain characteristics for a bolt and nut combinaton such as your strength—your tensile strength, your shear strength, your—it refers to other documents, I believe, in most cases, for the actual configuration tolerances of the manufacturer, but this means that the military has accepted this product for general usage, and once [fol. 824] you qualify and make that quality product why you can compete in that market.
Q. As a matter of fact, could a bolt and nut of the same size and same length take the place of a lockbolt?
A. Many of the applications that we developed were in replacing nuts and bolts, yes, sir.
Q. And is it within your knowledge that some of the airplane manufacturers never used lockbolts?
A. (No response.)
Q. To refresh your recollection did North American ever use lockbolts?
A. The only company that I have a recollection of that I could say that I did not believe ever used them was North American Aviation.

Mr. Lipson: Your Honor, I would like at this time to interpose an objection to this line of questioning on the grounds of relevance, unless counsel feels otherwise, I think we are actually entering into a market study here, and if we are, I would like to make my objection in much greater detail. This is a rather significant important legal question, and we are prepared to do so.
The Court: If I understand the question all right, I do not think—You are not intending to determine the market, are you?
Mr. Haggerty: No, your Honor. I am taking——

[fol. 825] The Court: (Interposing) You may continue.

Mr. Haggerty: (Continuing) —this from a door that was opened on direct examination.

The Court: You may continue.

Q. (By Mr. Haggerty) Do you recall whether or not the Republic used lockbolts or used many of them?

A. I do not recall about that, no, sir.

Q. You do not recall. But the only company that you recall was North American that did not use lockbolts?

A. This is the only one that I recall, yes, sir.

Mr. Haggerty: No further questions.

The Court: Mr. Pomeroy?

Cross-examination.

By Mr. Pomeroy:

Q. Mr. Mathews, I believe you said you came to the Huck Company in 1954, and you left in 1960, is that right?

A. Yes, sir.

Q. So you were there for a six-year period?

A. Yes, sir.

Q. Is that correct? And after you had been there about two years or a little more you succeeded Mr. Looker in charge of the sales department of Huck, is that right?

A. Yes, sir.

Q. This covered sales of all Huck's products, I assume, not just lockbolts?

[fol. 826] A. This covered all of the products, yes, sir.

Q. All right. And I think you said, however, that you did not have charge of things concerning patents and matters related thereto, which had been under Mr. Looker's supervision?

A. That is correct.

Q. You weren't acquainted with those particular matters, is that correct?

A. That is correct.

Q. You devoted yourself to the selling function at the Huck Company; that was your primary concern selling the product, is that right?

A. Yes, sir.

Q. Was there a period of time after Mr. Looker left, or

about the time when he was leaving when you were out in the field learning the customers first hand, or had you already done that? What did you have to do to assume this new position?

A. Well, generally speaking, as I recall it, I was quite familiar with the commercial end of the business and commercial users. When Mr. Looker left there was a void in my own knowledge with regard to aircraft customers and particularly the west coast customers, and I did travel extensively after my appointment as vice president, in getting acquainted at the major airplane companies, and with [fol. 827] our men on the west coast who—while I had met them, I had never worked with them.

Q. This would have been in the latter part of 1956, was it, that you were doing this traveling to a degree?

A. This would have been a period from, roughly, September of '56 to probably the middle of '57.

Q. But you had been more familiar with commercial lockbolts than with the aircraft variety?

A. That is correct.

Q. When you—Soon after you became vice president you wrote to Mr. Dickenson a letter that was introduced as Exhibit 82, which I will show you. Are these still in order, Mr. Haggerty, after you looked at them?

Mr. Haggerty: Well blame me.

Mr. Esherick: Mr. Pomeroy, the big pile there at the top.

Mr. Pomeroy: I will proceed to get them mixed up now.

Q. (By Mr. Pomeroy) Looking at that letter, Mr. Mathews, you address it to Mr. Dickenson in a familiar way of Dear Dick. Is that Mr. Dickenson's nickname?

A. This is his nickname, yes, sir.

Q. How many times had you met Mr. Dickenson before July of '56, if you can recall?

A. I would say that probably a maximum of twice.

[fol. 828] Q. And can you recall those occasions for us; are they the occasions of which you have already mentioned in response to Mr. Lipson's question?

A. To the best of my recollection they would have been the time that I traveled to New Brighton and the time that I attended their sales meeting in Homestead.

Q. Right. They were both—Were they both in 1956?

A. They were both prior to my becoming vice president, yes, sir.

Q. I am wondering if they were both in 1956, so far as you can recall?

A. I could not testify to that, sir.

Q. Now this travel to New Brighton that you speak of, was that you and Mr. Looker that went to New Brighton?

A. Yes, sir.

Q. Anyone else with you?

A. Not to my recollection.

Q. All right. And the meeting at the Homestead in Virginia is what you have already testified about today?

A. Yes, sir.

Q. The meeting in New Brighton to which you refer had what for its purpose; your visit there with Mr. Looker?

A. Well I do not recall any details of that particular visit, and my memory was merely refreshed by hearing previous testimony that I was along.

Q. You don't have any——

[fol. 829] A. (Interposing) I have no definite recollection of anything that took place, other than I do know that Mr. Looker and I made one trip to New Brighton together. I have a recollection of he and I going there together, but the subject matter I *do not recall.*

Q. It escapes you at the moment?

A. Yes, sir.

Q. At the time of the letter, that is Exhibit 82, that is July 23, 1956, did Huck have on hand a substantial inventory of lockbolts or Huckbolts, as they were called in your letter?

A. I could only presume that we did. I have no direct recollection of the size of the inventories.

Q. The question that you were raising here, I take it, was the desirability of adhering to established standards in the manufacture of lockbolts so that minor deviations therefrom would not serve to render inventory on hand obsolete, or unuseable, is that right?

A. This is the interpretation I would place on this, yes, sir.

Q. Standards are important in the manufacture of lockbolts, are they not; adherance to standards?

A. Yes, sir.

Q. And I suppose if there are deviations from the standards then that tends to put a product into a special kind of category which, if the customer kept on using, would [fol. 830] make the previously standard products something they didn't want, is that a fair interpretation?

A. That would be correct.

Q. And your desire here was to avoid unnecessary loss of that sort, is that right?

A. Yes, sir.

Q. Do you recall whether or not you received any reply to this letter, Exhibit 82?

A. I do not recall receiving a reply to this letter, no, sir.

Q. The letter ends up saying, "May we have your comments on this matter."

Do you remember whether you received any—excuse me—any comments either in writing or otherwise at that time?

A. I have been unable actually to associate the circumstances that caused this letter to be signed by myself. It was the transition period, I believe, when Mr. Looker was still there and I was taking over and I am not too certain that maybe he didn't actually write the letter and I put my name on it because he knew I was taking over and would be there for any further follow-up.

Q. All right.

A. But I cannot tell you—I cannot answer your question, I don't believe. I don't have the recollection.

Q. The same problem did persist, did it not, into the future?

A. The problem, to the best of my recollection, existed [fol. 831] up until the time I left the company.

Q. Right. Now I think, Mr. Mathews, you stated that you did not know the terms of the license agreement between the Huck Manufacturing Company and the Townsend Company; that is to say, Exhibit 17 in this case, is that true?

A. I had—I did not have familiarity with it, no, sir.

Q. Yes. You knew that Townsend was, of course, a licensee of Huck,——

A. (Interposing) Yes, sir.

Q. (Continuing) —for the manufacture and sale of lockbolts, is that right?

A. Yes, sir.

Q. And you knew that as such the Townsend Company was quoting identical prices following the Huck Price List, is that a fair statement?

A. On occasion they were able to know they were. I have no way of knowing all the time that they were—whenever there were deviations it usually came back through my salesmen, but generally speaking all price lists were identical, yes, sir.

Q. Now in the period between 1954, the time the license was granted and 1956, in July, you didn't have direct knowledge of Townsend's specific prices in the aircraft industry, I suppose, because you were concerned with commercials?

[fol. 832] A. No, I was aware of the prices.

Q. You were?

A. While my major activity was in the commercial end, we had certain areas within the company that were predominantly commercial with small users of aircraft products, subcontractors and so forth.

Q. All right.

A. And I had complete access and used the complete price list of the company.

Q. I see.

A. Administratively is where the breakdown came basically, just between Looker and myself; he handled the west coast and the prime aircraft areas, and I handled the rest of the commercial users and the men who were pursuing this part of the business.

Q. Right. But you knew, therefore, that Townsend was using the same price list and quoting the same prices, is that right?

A. I did, sir.

Q. Were you aware of the prior price adjustments or changes whether increases or otherwise, that Huck had put into effect between 1954 and 1956?

A. By being aware of them, I am not sure I understand what you mean.

Q. Well there had been price increases between the time that you came with Huck in 1954 and September or October [fol. 833] of 1956, had there not?

A. There had been, yes, sir.

Q. Had you been in charge of putting into effect—that is to say, seeing that they were—new prices were published and circulated?

A. By being in charge, I don't recall that prices were determined any differently while Mr. Looker was there than they were after Mr. Looker left, as far as the basic internal workings of the cost department developing the information.

Q. No, I didn't mean how they were actually computed, but I meant, however, they were made known and published, did you have anything to do with that function?

A. To the best of my knowledge—recollection on that, this was handled through the same people while Mr. Looker was there as it was after he left, yes; the same clerical people handled the distribution.

The Court: Did you yourself?

A. Myself personally, no sir.

The Court: That is what he meant.

Q. (By Mr. Pomeroy) Right. When the price list which became effective October 1, 1956, was being considered for publication you assume, I take it, that Townsend should be informed of this price list so they could make the same adjustments as previously, is that right? That is the price list that was to go into effect on or about October 1?

[fol. 834] A. Is this the one we discussed at length a while ago?

Q. Yes. It is embodied in Exhibit 83, I believe. The announcement to customers is Exhibit 86, Mr. Mathews, which I now hand you, and the announcement to your engineering representatives was Exhibit 85, which I will now hand you.

A. Could I hear the question again, please?

Q. Let me also hand you, so that you will have them all, Exhibit 83, which is your memorandum to Mr. Benkert of September 14, 1956.

Now the question that I was asking you was were you assuming on the day that you—the dates of the consideration of this price increase that was being proposed that, as previously, Townsend would be informed of this adjustment in prices so that they could charge the same prices?

Mr. Lipson: Your Honor, I object. The witness has already testified that previously he didn't do anything about prices.

Mr. Pomeroy: He has testified previously he knew that Townsend was quoting identical prices on the license agreement.

The Court: Between '54 and '56 he said he did not. I think we are now getting to a period after that period, is that right?

Mr. Pomeroy: We are still in the September, '56 period, your Honor.

[fol. 835] The Court: All right. You may proceed.

A. To the best of my recollection I don't recall what motivated this memorandum being written.

Q. (By Mr. Pomeroy) Which memorandum do you mean?

A. Exhibit No. 83.

Q. Right.

The Court: And that has to do with what?

A. That has to do with the question I was just asked, with regard to——

The Court: (Interposing) Policy on prices at that time?

A. As I understood the question, the question was if I thought when this price adjustment was made that it should be passed on to the Townsend Company?

Q. (By Mr. Pomeroy) Yes.

A. And my answer is that I do not recall what caused me to write this, so I cannot answer that I thought what you were thinking.

The Court: About what you are answering.

A. Have I confused it perfectly?

The Court: You have.

A. Would you like to start over? I am sorry.

The Court: I think I understand you, but the record will not.

Q. (By Mr. Pomeroy) When you testified earlier that [fol. 836] you had not seen the specific terms and conditions of the license agreement between Townsend and

Huck, that meant, of course,—included, of course, did it not, that you were not aware of the two year period under which the license would be exclusive and the prices were to—would be maintained identical, is that not true, Mr. Mathews?

A. That is correct.

Q. Therefore, when you wrote the memorandum of September 14, 1956, Exhibit 83, you were not aware of the fact that this happened to be the expiration of that two year period?

A. I was not?

Q. Did you, by the way, sign that memorandum?

A. This memorandum was signed by my secretary, who had full authority to do so.

Q. Do you remember any circumstances concerning your writing it? I mean, were you in the office or were you——

A. (Interposing) No.

Q. (Continuing) —away from the office, or what?

A. I could not tell you if it is something that I had dictated over the phone, or I dictated it prior to leaving on a trip. It was a common practice to put these on the dictating machine and the secretary I had had worked for the two previous vice presidents and—correction there. She had worked for Bob's predecessor—Looker's predecessor and when I came with the company she worked for me [fol. 837] during the time I was sales manager, and I would take the transcribing machine and put a lot of these on at night or at home and she would then go ahead and send them out for me.

Q. Right. Did you sign—Mr. Mathews, on direct examination, I am not sure I understood you, that you felt that you had been instructed to write this particular memorandum, Exhibit 83, by Mr. Benkert, or did you mean the customers' letter raising the—announcing the rise in prices, which is attached?

A. I don't believe I said I was instructed by Mr. Benkert. I believe that I said that I would assume I was instructed by someone to have handled it in this manner.

Q. To get the prices out on a particular effective date and to notify your engineering department and the customers and also the Townsend Company, is that right, that was all embodied by this series——

A. (Interposing) That is a real general description of it, but it——

Q. (Interposing) Yes. Well, this Exhibit 83 refers to the new prices and your letter announcing the prices, doesn't it?

A. Yes, sir.

Q. Now, your letter announcing the prices—the proposed letter is, I guess, on that yellow page, Exhibit 84, correct?

A. I don't have it, sir.

Q. I beg your pardon. Is that the proposed letter to customers?

[fol. 838] A. Yes, it is, sir.

Q. And then Exhibit 85 is the final letter to—I beg your pardon.

Exhibit 85 is the letter to your engineering representatives, is that right?

A. That is correct.

Q. And Exhibit 86, which you have, is the final letter to customers, is that correct?

A. That is correct.

Q. Now, the proposed letter to customers, Exhibit 84, was dated September 14, that went to Messrs. Armour and Benkert, did it not, according to the note in the upper righthand corner?

A. Yes, sir.

Q. And the final letter to customers, Exhibit 86, is dated September 25, 1956, is that correct?

A. Yes, sir.

Q. And your letter to the engineering people of Huck is also dated September 25, 1956, that is, Exhibit 85, is that correct?

A. Yes, sir.

Q. Do you know of any document that was mailed on September 18, 1956, according to the marginal note on Exhibit 83, where it said in handwriting "letter released 9-18-56"?

A. I have no recollection of another letter having been [fol. 839] released. My interpretation of that note on there would be that this rough draft was released on the 18th for printing.

Q. For printing. To go out on the 25th?

A. Yes, sir.

Q. And the effective date of the new prices and other terms was on October 1st, is that right?

A. Yes, sir.

Q. And this price change, Mr. Benkert, which is embraced by these—Mr. Mathews, excuse me.

Which is embraced by these documents embodied, according to Exhibit 86, particularly, a new policy on freight, did it not?

A. It did, yes, sir.

Q. All right. Is that what is meant by the first paragraph of Exhibit 86, where it states "many of our customers request that Huck adopt freight allowed as part of our standard terms of purchase. We are now ready to announce that such a policy"——?

A. Yes, sir.

Q. Is that so? And then, I take it that there was another new departure in this published announcement, of looking again at 86, near the bottom where it says "Orders received on and after October 1, 1956, shall be accepted at new adjusted prices and will be invoiced under terms of 'price in effect at time of shipment,' freight allowed as out- [fol. 840] lined previously—as outlined previously"—is that correct? Is that—was that a new policy or practice that was being instituted at that time?

A. That was, yes, sir.

Q. Now this freight allowed—well, let's talk about freight allowed first.

Mr. Mathews, there has been some reference to freight equalization and freight allowed and f.o.b. in the testimony so far. Can you tell us what change was being instituted here when Huck went to freight allowed?

A. If my memory serves me correctly, we had previously had policy f.o.b. Detroit, or f.o.b. the Los Angeles warehouse, and the customer paid the freight.

The adoption of this freight allowed was a program which meant that if the customer qualified under the minimum requirements, the company would allow freight of their choosing.

If the customer was in Texas, the merchandise cost him the same price laid into his plant as the customer who was in Tennessee or who was in Kalamazoo, Michigan, here.

Q. Have there been any kind of an intermediate plan or policy in effect as between Huck and its customers between the f.o.b. system and the freight allowed system?

A. I don't recall any intermediate plan, no, sir.

Q. Some reference was made in testimony to freight [fol. 841] equalization. Does that mean anything to you at this point?

A. Well, I do not recall freight equalization ever being used in our operation at Huck. There were—I have no recollection of an interim freight equalization program.

Q. Do you recall, Mr. Mathews, that in your couple of contacts with Mr. Dickenson in 1956, or with any other Huck—any other Townsend representative that they had been advocating a system of freight allowed as the method of charging or taking care of the freight problem, that being the simplest and easiest to administer?

A. I don't have any specific recollection of that, no.

Q. You wouldn't say that it wasn't the fact, however, would you?

A. I could not, no sir.

Q. What did it mean, Mr. Mathews, when your announcement said that price in effect at the time of shipment would prevail?

A. This meant that the order would be invoiced at the prevailing published price in effect at the time the shipment was made.

Q. This was a change from some prior practice?

A. This was a change from a prior practice, yes, sir.

Q. What was the prior practice?

A. The prior practice was guaranteed prices for twelve months from the receipt of an order.

Q. Now by that you mean if a customer placed an order, let's say, on January 1 of a particular year and shipments were not made until sometime later in that year, that the [fol. 842] price to the customer would be what the prices were when he placed the order on January 1, even though there had been a price increase between that time and the shipping time, is that right?

A. That is correct.

Q. In other words, if I understand you correctly, Huck was, in effect, guaranteeing the customer against the price raise from the date of his order until the date of shipment,

as long as the shipment was within twelve months, is that right?

A. That is correct.

Q. Now, then, by this October 1, '56 price revision, when you stated the prices in effect at time of shipment, this meant that if any increase in price did occur after the order was placed and accepted, the customer would have to pay the new price in effect at the time of shipment?

A. That is correct.

Q. The new published price list in effect at the time of shipment?

A. Yes, sir.

Q. Is that right? I take it that this particular change or revision was in effect—well, it was just disadvantageous to the customer in effect, wasn't it?

A. Very definitely.

Q. You were removing the protection or guarantee that [fol. 843] you had previously afforded him—the customer, is that right?

A. Yes, sir.

Q. Do you know, Mr. Mathews, whether the Townsend Company followed the Huck lead in this particular matter with reference to the aircraft companies?

A. It seems to me like the Townsend Company did not follow this particular policy with the result that there was a subsequent further change in this particular item where the Huck Company went to a six-month firm price on its purchase orders.

It is a vague recollection at this time, but I do believe there was something there.

Q. Are you able to recall now how long Huck stayed on this shipment policy—that is, prices in effect at the time of shipment will prevail?

A. I would not say how long, no, sir.

Q. Mr. Mathews, this exhibit—or this matter with the Lockheed Company that you testified about in 1958—March of 1958, Exhibit 93, does Exhibit 93 deal with this same problem?

A. I don't believe it is directly related in any way to that previous document, no, sir.

It is similar, but it is not directly related.

Q. I am looking at page two of this Exhibit 93, which

is your letter to the Lockheed Aircraft Corporation of March 7, 1958, where you mention an amendment in your—in Huck's contract with them effective February 12, '58, reading:

> [fol. 844] "Prices herein acknowledged as they apply to each purchase order are firm for six months from date of Lockheed's original purchase order date."

That in effect is a six month protection, is it not?

A. That is correct. However, that was not put into effect with Lockheed until February 12, 1958, as shown in the document.

Q. That is right.

A. And it is my recollection that the previous documents referenced up there which was cancelled by this amendment still contained the twelve month——

Q. (Interposing) Right.

A. (Continuing) —firm prices.

Therefore, this other announcement was to all customers except those where special terms and conditions had been negotiated.

Q. You are talking now about the 1956 announcement which we have just been over, was to all general customers, but not to customers where there were special terms and conditions had been negotiated, is that right?

A. Yes, sir.

Q. All I meant was that in 1958, with Lockheed, you had the same problem confronting you as to how long to protect prices, and you said at that time you were able to reduce [fol. 845] the twelve months protection on negotiations with them to six months, is that true?

A. That is correct.

Q. In 1958?

A. Yes, sir.

Q. And that is what Exhibit 93 reflects, does it not?

A. Yes, sir.

Q. Was this contract with Lockheed—what was it? I will ask you what it was. Was it a requirements contract, an annual contract, or what?

A. Are you referring to page two of Exhibit 93?

Q. Yes. It refers to an amendment to the terms and

conditions signed November 1, 195—I can't read the date on my copy—6, I guess.

1955, which I take it was the original date. Then there were some amendments in '56 and '57.

Now, what were these?

A. To the best of my recollection this did not involve any contract for parts of any kind. This was a condition where the offer to buy on the part of Lockheed and the fine print on the back of their purchase order was in conflict with the terms and conditions on the back of the quotation form, and order acknowledgment form of Huck Manufacturing, and this was an overriding letter agreement to affect a meeting of minds between the two pieces of paper [fol. 846] so that we could do business with them.

Q. I see. All right. Did you have the same twelve month protection in effect with other aircraft companies—you being Huck—during this period 1956 and '58 as with Lockheed, or did they differ?

A. I do not recall the others well enough to positively state. The bulk of the term and conditions problem that we had dealt with things like wording of warranty and this type of thing, more than it did with the price situation or with the firmness of your prices.

Q. You are not able to say whether you had a uniform policy or not with regard to these various aircraft——

A. (Interposing) I cannot, sir.

Q. You stated, Mr. Mathews, that the price lists which Huck published from time to time and distributed to customers, first on an addressograph and then on an I.B.M. machine, went to all your customers, is that right, and that is how you distributed them?

A. Yes, sir.

Q. Are you able to state whether Townsend Company was considered a customer of the Huck Company? Townsend—go ahead.

A. We sold considerable parts to the Townsend Company.

Q. What do you mean "parts"?

A. Lockbolt parts, collars and some pins. And I would assume that you might say that they were a customer, [fol. 847] inasmuch as they were buying and we were selling to them.

Q. All right. Was the Republic Aviation Company a customer of Huck's for lockbolts after you became vice president of sales in 1956?

A. I do not recall the Republic account well enough to answer you, sir.

Q. Well, I mean you were vice president in charge of sales after July, if they had been a good customer, I suppose you would recall it, wouldn't you?

A. If they would have been a big customer, I probably would recall it, but you say—I could sit here at this stage and say this company was and wasn't, with some six or seven thousand customers buying from us. I just don't recall it.

Q. Do you recall whether North American Aviation Company was a customer?

A. I recall that North American Aviation was not a lockbolt customer.

Q. You spoke a little while ago, Mr. Mathews, of learning occasionally from people in the field, meaning your sales people, of instances where the Townsend Company did not follow the Huck prices after you became vice president. Do you recall that a few moments ago?

You said that there were occasional deviations?

A. There were occasions, yes.

Q. Yes. Did you ever take any—what steps did you take [fol. 848] when you found out that this had occurred and you had lost an order to a customer as a result of such price competition or price differentiations?

A. We did the same thing and took orders back in the same manner by cutting prices.

Q. Was this done as a retaliatory method?

A. This was done as a retaliatory method.

Q. Was this done with the knowledge of the officers of the Huck Manufacturing Company?

A. This was done with Mr. Benkert's knowledge.

Q. Are you able to state whether or not it was done with Mr. Armour's knowledge?

A. I cannot positively state it was done with his knowledge, no, sir.

Q. Did anybody in Huck Manufacturing Company ever say to you well, two can play at that game, we can play

the same game; or two can play that game, or words to that effect?

A. With regard to this cutting of prices, you mean?

Q. Yes.

A. I don't recall such words being used. I do recall that there were cases where we would lose orders because of price, and we would discuss it, the order manager and myself, and the next time a large order would come in, why we would usually cut price and take a bigger one away from them than they took away from us, in the beginning, [fols. 849-852] but I don't recall the words that you are using, no, sir.

Q. Did you ever discuss such problems of losing customers or losing a particular order, a part of a piece of business to Townsend, with Mr. Armour or Mr. Benkert?

A. Yes, sir.

Q. Did they ever tell you that this was in violation of an oral agreement that they had with Mr. Dickenson of the Townsend Company?

A. No, sir.

Q. Did you ever hear of an oral agreement that they had, Mr. Armour had with Mr. Dickenson of the Townsend Company for maintaining Huck prices?

A. I never did.

Q. Did Mr. Looker ever tell you about any such agreement?

A. No, sir.

Mr. Pomeroy: That is all, Mr. Mathews. Thank you very much.

The Court: This would be a good—do you contemplate, I assume, doing further direct?

Mr. Lipson: Your Honor, we don't contemplate any further direct examination of Mr. Mathews.

The Court: Any further cross?

Mr. Haggerty: No, your Honor.

* * * * * * *

[fol. 853] ELVERT HUGH STAU, a witness called on behalf of the Government, was thereupon sworn by the Court, was examined and testified upon his oath as follows:

The Court: Would you give your full name to the reporter, please?

The Witness: Elvert Hugh Stau.

The Court: (Spelling) S-t——?.

The Witness: (Interposing, spelling) A- u.

The Court: (Continuing, spelling)—a-u. All right.

[fol. 854] Direct examination.

By Mr. Lipson:

Q. Mr. Stau, for the record, will you give your full name and address?

A. My name is Elvert Hugh Stau (spelling), S-t-a-u; my home is 2405 South Mountain Avenue, Duart (Spelling) D-u-a-r-t, California.

Q. I think you can hold the microphone up closer to yourself, rather than moving forward.

What is your business address, Mr. Stau?

A. 11445 Dolan (spelling) D-o-l-a-n Street.

Q. And with what company are you presently associated?

A. Olympic Screw and Rivet Company.

Q. What is your age, Mr. Stau?

A. 62.

Q. Mr. Stau, when did you start working for the Cherry Rivet Company?

A. 1942.

Q. In what capacity?

A. Well, I don't recall the very first capacity. Shortly after I went there I became production manager.

Q. Was that about what year?

A. That was probably early in 1943.

Q. Did you advance to any other positions in the company?

A. I later became plant manager. Then sales manager, [fol. 855] and then general manager.

Q. And about what year did you become general manager of the Cherry Rivet Company?

A. I believe in 1945.

Q. How long did you remain with the Cherry Rivet Company?

A. I remained with the Cherry Rivet Company until May 1st, 1952.

Q. Now, did the ownership of Cherry change in that period of time?

A. On January 1st, of 1951, the Townsend Company took the Cherry Rivet Company over on a stock merger deal.

Q. And is this the Cherry Rivet Division of the Townsend Company that we heard about before in this case?

A. Yes, sir.

Q. Now, what was the specific date that you said you left Cherry?

A. I believe it was May 1, 1952.

Q. What did you do after that?

A. For approximately one year I was in business for myself. Well, may I back up a moment.

I went directly from Cherry Rivet Company to a drill manufacturing company.

Q. What was the name of that company?

A. Republic Drill, as general manager. After a few months, I made arrangements with them where I became a distributor and took over the West Coast area as a distributor for them.

[fol. 856] Q. For Republic?

A. Yes, sir.

Q. During this period of time did you have any connections with Cherry Rivet Company, or the Cherry Rivet Division of the Townsend Company at this time?

A. Yes, I was—for part of that time I was in an advisory capacity.

Q. How long did you remain with Republic in this arrangement that you have just described?

A. About—well, they continued for some time, however, in 1953—and I don't recall whether it was April or May—I went back to the Cherry Rivet Division of the Townsend Company.

Q. In what capacity?

A. As general sales manager of aircraft sales and manager of local—and sales manager of local sales.

Q. And how long did you remain with Cherry Rivet at that time?

A. Until July 1, 1954.

Q. And at that date what position did you undertake?

A. I left there and went with the Olympic Screw and Rivet Corporation, as director of sales.

Q. And have you remained with Olympic from that time?

A. I have.

Q. And what position do you now hold?

A. I am vice president and general manager.

[fol. 857] Q. Mr. Stau, are you familiar with the early original development of the lockbolt device?

A. Yes, I am.

Q. Would you describe to us your familiarity with these circumstances?

A. Well, in early 1945 I was called to Wright Field to attempt to offer my help in solving a fastening problem that existed at that time. It was quite important.

Q. What is Wright Field, would you describe it? What significance did it have?

A. Well, Wright—Patterson Field is the headquarters—was the headquarters of the United States Air Force during the War.

Q. What was the nature of this problem that they had?

Mr. Pomeroy: If The Court please, I object to this as incompetent, irrelevant and immaterial.

Q. (By Mr. Lipson) Did anyone explain to you what the problem was?

A. Yes.

Q. Who did?

The Court: Well, the objection goes to the materiality. I suppose as background it might be all right.

Mr. Lipson: That is why it is put in, your Honor.

Q. (By Mr. Lipson) Who explained this problem to you?

A. I was called to the equipment laboratory in Wright [fol. 858] Field, and taken down to the equipment lab. I do not remember the individual at the moment with whom I spoke. There were a great many of them.

Q. What was the problem explained to you?

A. The Government was furnishing expendable gas tanks

for fuel tanks for our airplanes in the Pacific Area, and these tanks were being furnished in large numbers because they were expendable, and they were used to give our planes greater cruising distance, and when empty were jettisoned.

And they were shipped—these tanks were egg-shaped and they were in two pieces and were cradled—nested, and were shipped like this. They had to be fastened together after they arrived at destination.

And they had a large number of bolts and nuts to fasten them together with a gasket in between, and they were having a problem because of leakage because they—in fastening the bolts and nuts together, more than one person probably would do it, and they would tighten some of the bolts and nuts tighter than others and thereby induce a leak.

And they were trying to find a fastener that was consistent, that they wouldn't have to depend on the human element as much.

Mr. Pomeroy: If the Court please, I renew my objection.

The Court: I think this is far——

[fol. 859] Mr. Pomeroy: (Interposing) This is all taken under my objection.

The Court: This is far enough.

Q. (By Mr. Lipson) Who was the president of the Cherry Rivet Company immediately prior to the acquisition by Townsend?

A. Mr. William B. Hubbard.

Q. What was your position under him?

A. I was—I answered directly to him as general manager.

Q. Did the Cherry Rivet Company undertake to develop to produce any lockbolt devices?

A. Yes, they did.

Q. Prior to the acquisition by Townsend?

A. Yes, they did.

(Whereupon, Government's Exhibit No. 94, a letter, was marked for identification by the reporter.)

Q. (By Mr. Lipson) I show you Government Exhibit marked 94, and ask you if you can identify the signature on that letter?

A. Yes, I can.
Q. Whose is it?
A. Mr. Hubbard's signature.
Q. May I have 94, please. Thank you.

Mr. Lipson: I show Government Exhibit No. 94 to defense counsel for examination and possible objection.

Mr. Pomeroy: Do you have any copies of this, Mr. Lipson?

[fol. 860] Mr. Lipson: Yes. Would you like one?

Mr. Pomeroy: I would like one, if you have an extra. Thank you.

If the Court please, I will object to the proffered exhibit on the ground that it is relative to a period antedating the indictment.

Antedating the period of limitations relative to this case.

I further object to it on behalf of Defendants Dickenson and Townsend Company as being at a point prior to their connection with the Cherry Rivet Company.

Mr. Dickey: I object to it further, if the Court please, on the ground that it is a document prior to any date of conspiracy alleged in the indictment. The indictment says beginning in 1954, and this is a matter that goes clear back to 1950; has no bearing on this present case at all.

Mr. Lipson: Your Honor, the relevancy of the document is that it will tend to show that prior to the date alleged in the indictment, 1954, commencement of this conspiracy, that these two companies considered themselves competitors and that they—as the document will show, planned to compete with each other on a traditional price basis.

Mr. Pomeroy: That's—well,——

Mr. Lipson: (Interposing) The letter will show the situa-
[fol. 861] tion that existed prior to the agreement, the conspiracy alleged in the indictment.

Mr. Dickey: It is further clearly beyond any period of the Statute of Limitations, if the Court please, and it is a matter that occurred prior to any of the so-called licensing operations that are alleged in this case.

The Court: When were you with Cherry Rivet Company? It goes back to during this period, does it not?

A. 1942.

The Court: To?

A. 1952, and then from 1953 to 1954.

The Court: This was before Cherry Rivet became part of——

A. (Interposing) Cherry Rivet became a part of Townsend in January 1, of 1951.

The Court: If he is permitted to testify as to—and does testify with respect to the situation prior to the statutory period, I see no necessity for exhibits, however. They are merely corroborative of whatever his testimony might be that they were in a competitive field, is that not correct?

Mr. Lipson: Your Honor, I don't believe that this witness would have any personal knowledge of this correspondence beyond his ability to authenticate Mr. Hubbard's [fol. 862] signature.

That is why the document is offered. Mr. Hubbard was the president of the company at this time.

Mr. Dickey: Then, if the Court please, the matter is merely hearsay, this letter he is trying to get in.

Mr. Lipson: Well, I think this is clearly within the shop book rule, your Honor.

The Court: It can—as far as the shop book rule, it might be admitted, but what we are trying to talk about here is whether or not this is too remote or what is the materiality of it.

That is what I am trying to puzzle myself over.

Mr. Lipson: Well, when one considers that the suit between the Huck Manufacturing Company and the Townsend Company commenced in the latter part of 1951, this is almost immediately prior to the suit when the Cherry Rivet Division of the Townsend Company was entering the lockbolt business.

The Court: All right.

Mr. Dickey: This has no materiality, either.

The Court: It might have some probative value and I will receive it for that purpose.

Mr. Lipson: With your Honor's permission I would like to read a selected portion of the letter.

It is on the letterhead of Cherry Rivet Company, 231 Winston Street, Los Angeles 13.

[fol. 863] The Court: I assume that you can identify this signature, is that right?

A. That's the one I just identified.

The Court: Okay.

Mr. Lipson: It is dated July 29, 1950. Addressed to Mr. A. Watson Armour, Jr., Executive Vice President, Huck Manufacturing Company, 141 Jackson Boulevard, Chicago, 4, Illinois.

(Reading):

"Dear Mr. Armour:

"Your price list was received here a couple of days ago. This was a friendly gesture on your part, which I appreciate. Of course, we had been aware of the prices which your salesmen were quoting to our customers, and we had gathered a considerable number of these quotations so that we were able to construct a list for all sizes. This we had been using for quite some little time. I was astonished in comparing your actual list with this one to find how accurate our estimates had been."

I will skip the next paragraph and read the paragraph next to the bottom.

(Reading):

"Our tooling is now almost complete on lockbolts, [fol. 864] and we have scheduled our first deliveries for the first week in August. It has been very gratifying to discover how well this product has been received and what large quantities of them are in use at present or can be used with a good supply. As soon as we run our costs on the first production, we expect to put out a list of these prices. I will be happy to send you a copy of that. Present indications are that it will run substantially below your current offering prices."

The letter closes:

"With very best wishes and kindest regards,

"Sincerely yours,

"Bill Hubbard."

In the upper righthand corner of the letter is a mark—stamp mark A.W.A. III, date, July 31, 1950.

Mr. Pomeroy; Do you have the original letter?

Mr. Lipson: The original is here.

Mr. Pomeroy: That is a photostat. Your exhibit is a photostat.

Mr. Lipson: This is—the original of Exhibit No. 94 is the best original that we ever managed to obtain. This was——

Mr. Pomeroy: (Interposing) Is this an original?

[fol. 865] Mr. Lipson: No, this is apparently a photostat of an original letter. This photostat, however, was a direct production from the files of the Huck Manufacturing Company.

Mr. Pomeroy: Thank you.

Q. (By Mr. Lipson) To your knowledge, Mr. Stau, while you were working with the Townsend Company, did the Townsend Company ever produce lockbolts during the period before you left them the first time, prior to 1952?

A. Are you saying the Townsend Company?

Q. Well, was the Cherry Rivet Division part of the Townsend Company prior to that time?

A. Yes.

Q. Then I mean the Townsend Company, yes.

A. The Cherry Rivet Division Company, to the best of my recollection, did produce some lockbolts early in 1951.

Q. Do you recall a particular customer to whom they sold these?

A. Yes, Consolidated Vultee, or Convair.

Q. Where were they located?

A. Fort Worth. Was a customer.

Q. Were you a member of any particular committees in connection with the Cherry Rivet Division of the Townsend Company in the management of the Company?

A. I was a member of the patent committee of the Cherry Rivet Division.

[fols. 866-867] Q. Do you recall attending a meeting of the Cherry Rivet Division patent committee in about March of 1951?

A. I do.

Q. Do you recall any discussion there with respect to lockbolts?

A. I do.

Q. Would you relate the nature of that discussion, telling us whom you also recall was present?

A. Mr. Hubbard and Mr. Ketchum.

Q. Who is Mr. Ketchum?

A. He is the Chief Engineer of Cherry Rivet Division of Townsend.

Q. Is he in the court room?

A. Yes, he is.

Q. Will you continue, please?

A. Well, the meeting started, as I recall, by Mr. Hubbard reading a letter from Mr. Dickenson with respect to the patent situation with Huck on lockbolts.

Q. Do you recall the contents?

A. The——

Mr. Haggerty: (Interposing) Well, may it please the Court, I object to his testifying on the contents of a letter with no preliminary effort having been made, or explanation given. The letter itself is the best evidence.

• • • • • • •

[fol. 868] Mr. Lipson: Your Honor, perhaps we can go about this in a slightly different way that may satisfy these problems that are being raised here.

Q. (By Mr. Lipson) Mr. Stau, do you recall whether anyone at the meeting referred to was delegated to take any notes, prepare minutes?

A. Mr. Ketchum prepared the minutes of the patent [fol. 869] committee meetings at that time.

(Whereupon, a document was marked Government Exhibit No. 95, for identification, by the reporter.)

Q. (By Mr. Lipson) I will show you Government Exhibit marked No. 95 and ask you to turn to the last page of the document.

Does it purport to bear a signature?

A. Yes, it does.

Q. Whose signature?

A. Mr. M. C. Ketchum.

Q. Would you read the title on the very first page of the document, please?

A. Minutes of the Patent Committee Meeting of March 29, 1951.

Q. That would be sufficient. Thank you.

Mr. Lipson: I show Government Exhibit marked No. 95 to defense counsel for examination and possible objection.

Mr. Pomeroy: Do you have another copy of that, Mr. Lipson, please?

Mr. Lipson: Yes.

The Court: What part are you going to——

Mr. Lipson: (Interposing) The very—well, the second paragraph beginning with the words "Minutes."

The Court: Then how far?

Mr. Lipson: Just that.

The Court: Just that one paragraph?

[fol. 870] Mr. Lipson: That is all.

The Court: All right.

Any objection?

Mr. Haggerty: Is that the second paragraph on the first page?

Mr. Lipson: That is right. Beginning with the word "Minutes" and ending with the word——

The Court: (Interposing) "Field".

Mr. Lipson: (Continuing) —"field".

Mr. Pomeroy: I have no objection, your Honor.

Mr. Haggerty: May it please the Court, on behalf of Huck and Defendant Armour I object to it because as far as they are concerned, it is incompetent, irrelevant and as to them, and it shows no connection. This is entirely something—a meeting within the Cherry Rivet Division of Townsend, and until and unless a prima facie conspiracy is proven, it has no application as to us.

Mr. Lipson: I think this is relevant as an admission of a co-conspirator, your Honor, I believe we discussed it before.

The Court: Yes, it is along the same lines as those with reference to Huck meetings and it may be received.

Mr. Pomeroy: I assume, Mr. Lipson, that the document is being offered for the typewritten part of it and not the marginal checks?

[fol. 871] Mr. Lipson: I don't observe any——

Mr. Pomeroy: (Interposing) On page three and page four?

The Court: He is offering only——

Mr. Lipson: (Interposing) I am only offering it——

The Court: (Continuing) —the first paragraph.

Mr. Lipson: The paragraph noted.

Mr. Pomeroy: Oh, you limited it to that?

Mr. Lipson: Well, the title and signature at the conclusion.

Mr. Haggerty: I wish to further place on the record, your Honor, this is prior to the first date charged in the indictment.

The Court: Yes.

Mr. Haggerty: Being 1951.

Mr. Lipson: This document is entitled——

(Reading):

"Minutes of the Patent Committee Meeting of March 29, 1951.

"Minutes of the meeting of February 6, 1951, were reviewed and discussed. Mr. Hubbard reported on a conversation held two or three weeks previously with Mr. Dickenson. It appeared that the tentative conclusion of the Townsend attorneys was in favor of [fol. 872] entering into a license agreement with the Huck Manufacturing Company with respect to the manufacture and sale of lockbolts and lockbolt tools. The basis for this conclusion lay in the fact that it might be possible by such a license agreement to control the lockbolt business and limit it to Huck and Townsend. Such a limitation would be preferable to a legal action which would invalidate the patents and which, by the same act, would open the field to other manufacturers of fasteners. A license agreement would certainly discourage others from going into the field."

Q. (By Mr. Lipson) Mr. Stau, after you originally left the Townsend company and then returned, can you give us the approximate date of your return?

A. I believe it was—I believe it was May 1st. It may have been April 1st of 1953.

Q. And I believe you have already told us that your position was aircraft sales manager?

A. Of aircraft sales manager nationally, and other Townsend products on a local basis.

Q. What were your responsibilities in that position?

A. To promote the sale of the products which we made, [fol. 873] primarily. Almost entirely blind rivets to the airframe industry.

Q. Were you familiar with the events of the Huck-Townsend lawsuit?

A. Well——

Q. (Interposing) Well, were you familiar with the existence of the Huck-Townsend lawsuit at that time?

A. I was familiar with it, yes.

Q. Do you recall, Mr. Stau, whether or not you ever attended meetings with Mr. Dickenson in Pennsylvania during this latter period of your employment, this second phase of your employment with Townsend?

A. Yes.

Q. On how many occasions?

A. There were possibly three. I recall two.

Q. Do you recall a meeting in about May or June of 1954?

A. Yes.

Q. When did this meeting take place? Where did this meeting take place, more specifically?

A. In New Brighton at the Townsend Company in the office of Mr. Dickenson.

Q. Who called the meeting?

A. Mr. Chilcoat.

Q. Who was present at the meeting?

A. Mr. Chilcoat, Mr. Ritchie, I believe, his name was.

[fol. 874] Q. What position did he hold?

A. Assistant to Mr. Chilcoat. I believe Mr. Casner was there.

Q. What position did he hold?

A. I believe he was plant manager of Townsend Company at New Brighton.

Q. And was——

A. (Interposing) I believe also that the treasurer of the company, Mr. Fabiani was present.

Q. Was Mr. Dickenson present at this meeting?

A. Mr. Dickenson.

Q. Was Mr. Horst present?

A. I can't recall whether Mr. Horst was there or not.

Q. What was the nature of the discussion at this meeting?

A. It was a discussion of general sales problems of the company.

Q. Do you remember any of the specific topics that were discussed?

A. We discussed the creating of a commercial blind rivet that would be more competitive than the one we were making, had been making with other competitors in the field. We discussed special items that were made by Townsend to replace these parts made by Townsend with—cold headed parts, which would replace machine parts that were used as fasteners in various applications in the field.

Q. How long did this meeting last?

A. Probably about forty-five minutes.

[fol. 875] Q. And what happened when the meeting was adjourned; everyone just leave or did anything else happen?

A. Mr. Chilcoat remained for a short discussion with Mr. Dickenson.

Q. Was there anyone else there besides the three persons you have just named?

A. I think not.

Q. Do you recall that discussion?

A. Yes, I believe I do.

Q. Would you relate what that discussion was? To the best of your ability who said what.

A. I believe Mr. Dickenson asked me if I was satisfied with the meeting or with the discussion. I told him I wasn't, because I didn't believe that we had discussed some of the subjects enough. We had a little further discussion, and I asked at that time what the status of the lockbolt situation was.

Q. What did Mr. Dickenson say?

A. He told me that they were in the process of attempting to negotiate an exclusive license with Huck for the sale, the manufacture and sale of lockbolts.

Q. Did you say anything to that remark?

A. Well, I had taken the position that I thought we should make our own and not take a license, that we should make our own lockbolts.

Q. Did Mr. Dickenson say anything to you then?

[fol. 876] A. Well, to the effect that he made the decision and that he felt that was the better thing to do.

Q. Did he give any reasons for his decision?

A. That they could better control the market by recognizing the validity of the Huck patent.

Q. Did he mention any other fastener manufacturing firms in the course of this conversation?

Do you recall whether he mentioned the firm of Lamson and Sessions?

Mr. Pomeroy: Leading. Objected to as such.

The Court: He may answer.

A. There had been a discussion in which Lamson & Sessions and R. W. and—Russell, Birdsell—I'm sorry—Russell, Birdsell and Ward was mentioned as possible people who would like to get into the manufacture of lockbolts, if the field were open.

Q. (By Mr. Lipson) Do you recall what Mr. Dickenson said about these firms or said with respect to them?

Mr. Pomeroy: Same objection.

The Court: He may answer.

A. Well, the general idea expressed was that, if we had an exclusive license with Huck, that——

Mr. Pomeroy: (Interposing) If the Court please, I object to a "general idea" that was expressed. I mean, if the witness can give the exact or approximately the exact words, well, that would be within your ruling of [fol. 877] admission but——

The Court: (Interposing) I think that is what he is trying to do. Is it not, sir?

A. Yes, sir.

The Court: All right, go ahead.

A. That we would be in a better position by having fewer or no other competition, other than Huck.

Q. (By Mr. Lipson) Who was present at the time you were talking to Mr. Dickenson, the conversation you have just related?

A. Mr. Chilcoat was there. Whether he was there for all of the discussion or not, I do not remember. I do

remember that he was called away on the phone sometime during the end of this, toward the end of this conversation.

Q. Well, how long did this supplementary conversation to the meeting last, to the best of your knowledge?

A. Possibly ten or fifteen minutes.

Q. What did you do when the conversation terminated?

A. I went back to Mr. Chilcoat's office and he and I went to lunch.

Q. And how long did you remain in the New Brighton after that?

A. I left that afternoon.

Q. How long was it before you left the company?

A. Well, I believe the conversation which I have just testified to took place in March or April of 1954, and I resigned about the first of June, as near the first of June [fol. 878] as I can recall, effective July 1, 1954.

Mr. Lipson: At this time, I ask the Reporter to mark these two documents for identification.

(Whereupon, two documents were marked as Government Exhibits Nos. 96 and 97 for identification by the reporter.)

Q. (By Mr. Lipson, continuing) I show you Government Exhibits Nos. 96 and 97. Can you identify any of these signatures on that, on either of those documents?

A. Only that of Paul Horst.

Q. Does it appear on both those documents or only on one?

A. It appears on both of them.

Q. Thank you. Mr. Stau, what kind of business is Olympic Screw and Rivet Company engaged in?

A. We are engaged in the manufacture of fasteners, both commercial and airframe, aircraft-type.

Q. About how many people does Olympic employ?

A. About 230.

Q. And what is a rough figure of your annual sales?

A. About three and a half million annually.

Q. I am sorry, I didn't hear the last.

A. Annually.

Q. Mr. Stau, who are your superiors at Olympic Screw & Rivet Company? Where do you stand in the chain of command?

A. I am vice president and general manager. Mr. [fol. 879] Maness is the president to whom I report directly.

Q. How do you spell that, please?

A. (Spelling) M-a-n-e-s-s-, initials are S. R.

Q. Has Olympic Screw and Rivet Company, to your knowledge, ever requested permission to—strike the word permission—every requested a license from either of the Defendants here to manufacture lockbolts?

A. We requested a license from the Huck Manufacturing Company to manufacture and sell lockbolts.

Q. About when?

A. Well, I believe the records show that the license was requested by Mr. Maness prior to my requesting one. My request was in 1957.

Q. To whom did you make this request?

A. Mr. Mathews.

Q. Was it written or oral?

A. It was made orally in the beginning and later, within a week or two, clarified in a letter.

Mr. Lipson: Will the reporter mark this document?

(Whereupon, a letter was marked as Government Exhibit 98, for identification, by the reporter.)

Q. (By Mr. Lipson, continuing) Mr. Stau, I show you Government Exhibit marked 98, and ask you if you can identify that exhibit? Tell me who wrote it?

A. This is a letter written by me to George Mathews of [fol. 880] the Huck Manufacturing Company.

Q. Please hold 98. Is that the written request—strike that.

May I have 98?

Mr. Lipson: I show this document to defense counsel for examination and possible objection.

Mr. Haggerty: No objection, may it please the Court.

Mr. Pomeroy: We have none either.

The Court: It may be received.

Mr. Lipson: Thank you.

Q. (By Mr. Lipson, continuing) Is Government Exhibit No. 98 the written request you referred to as the request to Mr. Mathews?

A. It confirms my verbal request, clarifies my verbal request, yes.

Q. I am asking, is this the copy of the letter that you referred to before?

A. Yes.

Q. All right.

A. Yes, sir.

Q. Now, I show you Government Exhibit No. 92, already admitted in evidence, and ask you if there is any relationship between the documents, the yellow document 98 and Government Exhibit 92?

A. Yes. My letter of July the 11th was answered by [fol. 881] Mr. Mathews on July 19th.

Q. What year?

A. 1957.

Q. All right, thank you.

Mr. Stau, were there any other occasions when you asked the Huck Manufacturing Company or the Townsend Company for a license? A lockbolt license, I'm referring to.

A. In 1958, I attended a meeting at—in—here in Detroit, or, rather, I called here and had a meeting with Mr. Armour and Mr. Benkert at the Huck Plant here in Detroit.

Q. Do you recall how the subject of the lockbolt license came up?

A. Well, it brought up by me after discussion of the other matters. I reiterated our request for it and there was some discussion as to the possibility of the Huck attorneys looking at the drawings, the detail of a lockbolt with which Olympic Screw and Rivet Corporation had developed.

Q. Did you ever get a license?

A. No, sir.

Q. Do you know what kind of machinery is used in manufacturing lockbolts?

A. Yes, sir.

Q. What kind of machinery?

A. Primarily cold heading equipment and thread rolling equipment. There's heat treating equipment involved.

[fol. 882] Q. Does Olympic Screw have such equipment?

A. Yes, they do.

Q. To what extent?

A. Well, the best of my knowledge, Olympic Screw and Rivet Corporation is the largest cold-heading plant west

of Chicago. To the best of my knowledge. I believe that to be true.

Q. By the way, Mr. Stau, has the Huck Manufacturing Company ever had occasion to license Olympic on devices other than lockbolts?

A. Yes, we took—were granted a license——

Mr. Haggerty: (Interposing) May it please the Court, I object to that, irrelevant and immaterial to the issues, anything other than lockbolts.

The Court: I think it might be material.

Q. (By Mr. Lipson, continuing) Would you just name the product involved? I don't want to go into it in a great deal of details.

A. Self-plugging blind rivet.

Q. What kind of machines are they made on?

A. Cold heading equipment.

Q. Now, your firm, Olympic, and Huck have had some litigation, haven't they?

A. Yes.

Q. What kind—would you relate to the jury the nature [fol. 883] of the litigation?

A. May I go back a little bit? I would like to go back a little bit to bring this up to date.

Q. If it's necessary for a complete answer, then I ask that you do so.

A. In 1954, Bob Looker, who was then with Huck, approached the Olympic Screw and Rivet Corporation and suggested that he thought that some of the rivets which we made might be an infringement on a patent that Huck held and that we should take limited license to manufacture those rivets.

Q. Were these lockbolts or were they——

A. (Interposing) These are blind rivets. And after two or three years negotiations,——

Mr. Dickey: (Interposing) If the Court please, I would like to object to this testimony. It has to do with blind rivets and not lockbolts. It is immaterial and it is irrelevant to this suit.

Mr. Lipson: Well, I think it is relevant only to——

The Court: (Interposing) I think that there might be relevance in reference to other matters in these things,

otherwise we do not get a true picture that the jury must have in this matter. I think that it probably is material. I cannot tell, but I think it has probative value.

You may proceed.

[fol. 884] A. In 19— about 1956, I believe it was, we had prepared what—in conjunction with Mr. Looker—what we thought was the final draft of the license arrangement that we would make with Huck for the blind rivets.

Shortly after that, I was told that Mr. Looker had left the Huck Company, and possibly a year or year and a half later, Huck filed suit against Olympic Screw and Rivet Corporation for infringement on this patent.

They also filed a suit on a methods patent which they had, which they thought we infringed, which was later settled. It was regarding this suit that I primarily went to the offices of Mr. Armour and discussed what had taken place, because we had thought that we had done everything possible to make an agreement, satisfactory agreement.

The Court: This was with respect to blind rivets?

A. Yes; sir.

The Court: All right.

A. And following that meeting, there was another meeting at which—at which the situation was settled and we subsequently did take a license.

Q. (By Mr. Lipson, continuing) What happened to that lawsuit?

A. The one concerning the license was dropped, because we took a license. The one concerning the methods of making another item, which was not the rivet covered by the license that we took, was dropped at some later date.

[fol. 885] Q. Did you have to pay any damages to the Huck Manufacturing Company? I say you, I mean Olympic,—have to pay any damages?

A. We didn't pay any damages. We paid royalties, in —for a time, and we paid some royalties for a two year period, I believe, prior to the license.

Q. Do you recall what that amounted to in dollars?

A. No, I do not. I would be guessing, if I told you.

Q. Was it in the neighborhood of a hundred thousand dollars, or less?

A. No. No. I would say it was in the neighborhood of ten, fifteen thousand dollars, possibly twenty.

Q. Is there any other kind of litigation in which the Olympic Screw and Rivet Company and the Huck Manufacturing Company are presently engaged in?

A. Well, I really don't know. We have had a patent interference suit in the courts for some—or in the patent court for some three to four years.

Q. Is this this—with respect to lockbolts or something else?

A. This is in respect to a structural rivet. It is a special blind rivet, which is made for the—is used in the erection of metal buildings.

Q. What is the status of that interference proceeding?

A. To my own knowledge—I do not know—I was informed here in—orally in this court room that we had—[fol. 886] that Olympic had lost the interference suit to Huck. I asked my partner, or, rather, Mr. Maness about it and he had no knowledge at that time.

I talked to him yesterday—night before last, and he told me that it had been confirmed, but he had not seen any of the transcript or any of the papers regarding the decision by the Review Board.

Q. Is Olympic Screw and Rivet Company interested in the outcome of this situation, this suit? When I say this "suit", I am referring to this criminal action now being tried.

A. I would say we are to a degree.

Q. In what respect.

A. Well, Olympic Screw and Rivet Corporation has developed a lockbolt. We have been assured by our attorneys that this lockbolt does not infringe the Huck patents. However, we feel that, if we were to present that on the market, we would be buying another lawsuit, and, very frankly, we can't afford it.

So, we would be interested in the outcome of this trial, as to whether or not we might put our lockbolt on the market.

Q. Has Olympic Screw and Rivet filed a triple damage action against either of the corporate Defendants?

A. No, sir.

Q. Do you know whether Olympic contemplates doing so?

[fols. 887-889] A. We have no such plans.

Mr. Lipson: Your Honor, I have no further direct examination of this witness.

* * * * * * *

[fol. 890] Cross-examination.

By Mr. Pomeroy:

Q. Mr. Stau, in the early part of your direct examination you referred to a meeting of the Patent Committee of the Cherry Rivet Company, or Cherry Rivet Division of Townsend Company, held in March of 1951?

A. Yes, sir.

Q. At which you stated that Mr. Hubbard, the then president, was he, of the company?

A. Yes, sir.

Q. Had reported on a letter, which he had received from Mr. Dickenson, the president of the Townsend Company, [fol. 891] do you recall that?

A. Yes, sir.

Q. And thereafter Mr. Lipson showed you, for identification, the Minutes of the Patent Committee of March 29, 1951, and then read the second paragraph into evidence. Do you recall?

A. Yes, sir.

Q. The second sentence of that paragraph, which was read, states that Mr. Hubbard reported on a conversation held two or three weeks previously with Mr. Dickenson, and then it goes on about Mr. Dickenson's views on a license with Huck.

Does this indicate to you by way of refreshing your recollection that when you referred to a letter that Mr. Hubbard reported on that he was reporting on a conversation that he had with Mr. Dickenson as stated in that letter —in that paragraph of the Minutes?

A. The Minutes do say that Mr. Hubbard reported on a conversation held two or three weeks previously with Mr.

Dickenson. However, my recollection is that he also read a letter.

Q. Does that appear in the paragraph referred to?

A. It does not appear there, no, sir.

Mr. Pomeroy: Will Mr. Lipson stipulate that it does not appear elsewhere in these Minutes?

Mr. Lipson: I have not read the entire Minutes, but if [fol. 892] you assure me it doesn't; I will stipulate.

Mr. Pomeroy: You mean you haven't read these?

Mr. Lipson: Not in the past week.

Mr. Pomeroy: It may be so stipulated.

Q. (By Mr. Pomeroy) Mr. Stau, you say that the Cherry Rivet Division had started producing lockbolts and sold them to Convair back when, in 1950-51?

A. In the latter part of 1950 and the early part of '51, is my best recollection, yes.

Q. And thereafter did they cease manufacturing and selling lockbolts?

A. Yes.

Q. In '51?

A. Yes.

Q. That was because of the claimed infringement by the Huck Company of their patents through this Cherry Rivet product?

A. Primarily. What actually happened before the suit was filed——

Q. (Interposing) When was the suit filed?

A. I don't know, to the best of my recollection. I believe it to be sometime late in 1951, or possibly early in '52, I do not know exactly when that was filed.

Q. Before that there had been letters sent out to customers, is that right?

[fol. 893] A. That is primarily—the primary reason why we quit manufacturing because of letters to customers and the customers not wanting to get involved in a lawsuit.

Q. Right.

A. And cancelling their orders.

Q. Correct. Now, during the—you say you left Townsend Company finally in July of 1954, is that what you said?

A. Yes, sir.

Q. During the remainder of your employment with Townsend, that is to say, from 195—let's say mid '51 to mid '54, Townsend Company was not in production of lockbolts?

A. Not to my knowledge. Not at the Cherry Rivet Division.

Q. Yes. So that as sales manager of Cherry Rivet you had nothing to do with the sale of lockbolts for Townsend Company?

A. Not after early in '51 I did not.

Q. All right. Did I understand you to say, Mr. Stau, that the Olympic Screw and Rivet Company, which you have since been connected, and are now connected, has a license from the Huck Manufacturing Company for blind rivets?

A. Yes, we have such a license.

Q. Yes. Now am I correct in stating that Olympic has sta-ted to produce and sell a blind rivet which Huck claimed infringed Huck patents on blind rivets?

A. Yes, sir.

Q. And did the Huck Company thereafter sue the Olympic Company,——

[fol. 894] A. (Interposing) They brought suit.

Q. (Continuing) —for infringement?

A. For infringement. And it was settled by our taking a limited license on——

Q. (Interposing) Blind rivets?

A. (Continuing) —that portion of the rivets, which we produced that was thought by Huck to infringe this patent.

Q. Then the suit was settled, or dismissed as a consequence?

A. That is correct.

Mr. Pomeroy: Thank you. That is all.

Cross-examination.

By Mr. Dickey:

Q. Mr. Stau, you have testified here that Olympic is interested in the outcome of this present anti-trust suit on account of Olympic's development of a lockbolt?

A. Yes, sir.

Q. Which you have been advised, or Olympic has been advised by its attorneys does not infringe the Huck patents?

A. Our attorneys said that. That is the opinion of our attorneys; our patent attorneys.

Q. Now you have never shown that lockbolt to the Huck Company, have you?

A. No.

Q. Nor asked them whether or not they thought it in-
[fol. 895] fringed their patents?

A. No, sir.

Mr. Dickey: That is all.

Mr. Lipson: The United States has no re-direct of Mr. Stau.

The Court: No further examination? May this witness be excused?

Mr. Lipson: Your Honor, we have no objection to having him excused. He has been here for quite sometime.

Mr. Pomeroy: That is agreeable with us, sir.

Mr. Haggerty: No objection, your Honor.

The Court: You may be excused, sir.

The Witness: Thank you.

(Whereupon, the witness was excused.)

[fol. 896] The Court: I imagine all these people will be delighted to go to California, including you, too, sir.

Mr. Haggerty: You might grant a transfer, your Honor, and we can all go.

The Court: That was never asked for.

(Whereupon, a group of documents were marked Government's Exhibits Nos. 99, 100, and 101, for identification, by the reporter.)

JOHN H. ROY, a witness called on behalf of the Government, having been first duly sworn by the Court Clerk, was examined and testified upon his oath, as follows:

Direct examination.

By Mr. Lipson:

Q. Would you state your full name, please?
A. John H. Roy.
Q. And your address, Mr. Roy?
A. 149 West Road, La Habra, California.

The Court: Another one.

Q. (By Mr. Lipson) What position do you hold presently, Mr. Roy?
A. I am general sales manager, Olympic Screw and Rivet Corporation.
[fol. 897] Q. How long have you been with Olympic?
A. Since October of last year.
Q. Prior to joining Olympic, have you ever been employed by either of the defendants in this case, the Defendant corporations?
A. Yes, sir.
Q. Which corporation?
A. Cherry Rivet Division of Townsend Company.
Q. How long have you been so employed?
A. Four years.
Q. During what period of time?
A. 1957 through 1961.
Q. What position did you hold?
A. Manager of aircraft sales.
Q. Did you hold that position throughout the entire time you just referred to?
A. Yes, I did.
Q. What was the general nature of your duties in that position?
A. The sale of the company's line of products that applied to the aerospace industry; the creation of literature and advertising pertaining thereto.
Q. Were lockbolts among these products?
A. Yes, they were.
Q. Are you familiar with the lockbolt devices?

A. Yes, I am.

[fol. 898] Q. Do you know whether or not Townsend during this period actually sold lockbolt devices—lockbolts as we have used the term in this case?

A. Yes, they sold them.

Q. To whom?

A. Well, to aerospace firms and also commercial firms, shipbuilding firms.

Q. Where were these firms located?

A. Well, throughout the United States.

Q. Well, where was the manufacturing facilities for lockbolts, the lockbolts you were concerned with in your position?

A. At Santa Ana, California.

Q. And where were these customers located physically, in what states were they located?

A. All—well, all—well, not all states, but generally the western portion of the United States, even though some sales were in—made to most all aerospace producers.

Q. Were any other—were any of these customers located outside of the State of California?

A. Yes, they were.

Q. Will you name two or three of them?

A. Boeing, Seattle; Convair, Fort Worth; McDonnell, St. Louis, Missouri.

Q. Thank you. Who was your boss in Cherry Rivet Division?

A. Mr. Ed Buster.

[fol. 899] Q. And who was his boss?

A. Mr. Dickenson.

Q. Were either of these gentlemen stationed at the Santa Ana, facility in California?

A. Yes.

Q. Who?

A. Mr. Buster.

Q. How did Mr. Buster and Mr. Dickenson communicate with each other on company matters, or do you know how they communicated?

A. Not in every case, but in some cases, I do.

Q. Well, generally how?

A. Telephone, personal visit, letter.

Q. I am not clear on the exact status of Mr. Paul Horst

in the chain of command of the Townsend Company Cherry Rivet Division. Where did he stand with respect to Mr. Buster and Mr. Dickenson?

A. I am not absolutely sure that I know either.

Q. Was he considered a superior of Mr. Buster?

A. He might have been.

Q. Well, did he report to Buster, or did Buster report to him, do you know that?

A. I don't believe either way.

Q. Well, did Mr. Dickenson report to Mr. Horst?

A. No, to my understanding Mr. Horst was Mr. Dickenson's assistant, but I am not certain of that.

[fol. 900] Q. In your position, were you familiar with the prices for lockbolt devices?

A. Yes, I was.

Q. Referring to those made and marketed by the Cherry Rivet Division of Townsend Company, is your same answer?

A. Yes.

Q. Are you familiar with the prices for the same or similar type of lockbolts made and manufactured by the Huck Manufacturing Company during this period of time when you were employed there? I am just asking you whether you are familiar with these——

A. (Interposing) Yes, I am, or was.

Q. Is there any relationship between those prices?

A. They were substantially the same.

Q. How did you know of the Huck prices. How did you know what they were?

A. Well, the Huck prices were known to us in two basic ways, one would be through their published—or I should say printed—price lists, and the other were where deviations occurred from these price lists. These might be made known through a salesman that found this out from a buyer, where they had made a deviation, that would be reported to me.

Q. Did you ever obtain copies of Huck price lists?

A. Yes, I did.

Q. How did they come to you?

[fol. 901] A. They came in the mail.

Q. Any particular time?

A. Anytime they were changed.

Q. By whom? Changed by whom?
A. By Huck.
Q. Do you know who mailed them to you?
A. No, I do not.
Q. How many copies came?
A. Six.
Q. How were they distributed?
A. Well, this varied. In my latter portion of my tenure with Cherry, they came to Bill Arnoldy that worked for me.
Q. What position did he have?
A. Well, he was in the technical sales group and primarily was responsible for maintaining current pricing on our products and competitior's products.
Q. Did anyone else in the Cherry Rivet Company get copies of these price lists?
A. Yes. When they came to Mr. Arnoldy they were distributed. I got a copy, a copy went to each of the two men on the order desk, who had day to day dealings with the customers.
I am not sure where the other copies went.
Q. What was the function of the men on the order desk —how did they perform their work? Basically, what kind of work did they do?
[fol. 902] A. They answered the telephone, when a customer called inquiring about price and delivery of lockbolt devices or other Cherry products; they handled mail that came, along the same nature, or teletypes, and would answer the order if a customer gave them one by either means.
Q. Mr. Roy, do you ever recall encountering Mr. George Mathews of the Huck Manufacturing Company while you were employed in the position you have been here testifying about?
A. I do.
Q. You recall the geographic location?
A. Well, there were several meetings.
Q. Well, start with the earliest one you recall. Where did it take place?
A. I believe the first time I met Mr. Mathews, he came to the Santa Ana Plant and the visit, so far as I was con-

cerned, merely an introduction to Mr. Mathews, not much more took place.

Q. Do you recall meeting him on any other occasion?

A. Yes, I met with him in the Huck facility at—I believe it was Inglewood.

Q. Do you know what kind of facility this was?

A. It was Huck's Western headquarters, their western office and warehouse.

Q. About what time was that; can you recall, in time?

A. Well, the best of my recollection, is that it is in late [fol. 903] 1958, possibly early 1959, in that period.

Q. In your position with the Cherry Rivet Division with Townsend Company, did you ever have any occasion to make recommendations with respect to price changes on any of the lockbolt products?

I am referring to recommendations now.

A. With regard to changes? Is that what you asked?

Q. Well, changes in an existing product or prices for a newly developed product or additive to a product part?

A. Yes, I think I had such occasion, but rarely.

Q. To whom would you make these recommendations?

A. To Mr. Buster.

Q. I show you Government's Exhibit marked No. 99, and ask you if you can identify who authored that memo?

A. I did.

Q. May I have it, please?

A. (Hands exhibit to Mr. Lipson.)

Mr. Lipson: I show Government Exhibit marked 99 to defense counsel for examination and possible objection.

Mr. Haggerty: No objection, may it please the Court.

Mr. Pomeroy: We have no objection.

The Court: It may be received.

Mr. Lipson: Thank you.

Q. (By Mr. Lipson, continuing) I show you Government [fol. 904] Exhibit No. 99 and I ask you, Mr. Roy, if this is one of the occasions that you say—one of the occasions that reflect one of the occasions where you made the kind of price recommendation that you referred to before?

A. Yes, this would be one of the occasions.

Q. Can you specifically tell us the price of what was—

was involved in this thing; what was the particular price matter involved in these recommendations?

A. There are several in this memorandum.

Q. Well, could you summarize very briefly what——

A. (Interposing) Well, these—this memorandum refers to the pricing of lockbolts and what extras were to be charged for special finishes or special lubricants, and it also recommends some general pricing policies.

Q. What is the date of this memorandum?

A. January 19, 1959.

Q. Mr. Roy, I show you Government Exhibit marked 100, and ask you if you can identify this signature that appears at the bottom of that document?

A. I can.

Q. Whose signature is that?

A. It's the initialed signature of Mr. Ed Buster.

Q. And what date does that document purport to bear?

A. January 22, 1959.

Q. May I have it, please?

[fol. 905] A. (Witness hands document to Mr. Lipson.)

Mr. Lipson: I show Government Exhibit No. 100 to defense counsel for examination and possible objection.

Mr. Haggerty: No objection, may it please the Court.

Mr. Pomeroy: No objection.

The Court: It may be received.

Q. (By Mr. Lipson, continuing) I would like to read this memorandum, stationery letterhead,

(Reading):

"Townsend Company
"Cherry Rivet Division."

The written name "Buster" is scratched out in red pencil.

(Reading, continuing)

"Date January 22, 1959
"To P. E. Horst."

Red check mark.

(Reading, continuing):

"From E. B. Buster

"Subject: Lockbolt Standards

"Attached is John Roy's memorandum to me of January 19, which outlines recommendations of the Aircraft Sales Department with respect to lockbolt standards.

"You will recognize that these recommendations [fol. 906] represent a backing down on our part on clear chromate. We are not particularly concerned in doing this, because the proposed price increases will automatically take care of the higher cost of inventory of T I and T II.

"The problem is somewhat diminished by the proposal that no two lockbolt parts, which would vary in finish, tolerances, etcetera, would be sold under the same part number. Thus, in effect, the price differential is buried.

"On receipt of this information, I would appreciate your telephoning me for further details before making contact in Detroit.

"Attachment."

And the signature, initials previously described by Mr. Roy.

Mr. Roy, I now show you Government Exhibit marked Nos. 101, and ask you if you can tell me who drafted that?

A. I did.

Q. May I have this, please?

A. (Witness hands documents to Mr. Lipson.)

Mr. Lipson: I show Government Exhibit marked 101 to defense counsel for examination and possible objection.

Mr. Haggerty: No objection, may it please the Court.

Mr. Pomeroy: No objection.

The Court: It may be received.

[fol. 907] Q. (By Mr. Lipson, continuing) Mr. Roy, I show you Government Exhibit No. 101, and Government Exhibit No. 99, which you have just testified to previously

—was your recommendations, and ask you if there is any connection between Government Exhibit No. 99 and 101?

A. Yes, there is.

Q. What is that connection?

A. Government Exhibit No. 99 is the memorandum to Mr. Buster setting forth my recommendations—or correction—the company's recommendations on pricing matters. Exhibit 101 dated February 9th, is the memorandum to people within our company, or those selling products for our company, making these recommendations, or certain portions of them, if—not all were adopted, but making certain portions of them policy.

Q. The recommendations you referred to are those in 99, I presume?

A. Yes.

Q. Do you recall who gave you authority to make these recommendations policy?

A. Mr. Buster.

Q. And with respect to the policy memorandum Government Exhibit 101, what date does it bear?

A. February 9, 1959.

Q. Thank you.

[fol. 908] Mr. Roy, how did you terminate your employment with Townsend Company? What happened?

A. I think by mutual consent I resigned.

Q. Were you asked to resign?

A. I was.

Q. Were the reasons explained to you?

A. I don't think so.

Q. I will leave it there. While you were still employed with the Townsend Company, were you aware or did you receive any information that the Federal Bureau of Investigation was conducting an inquiry into lockbolt matters?

A. Only secondhand.

Q. Well, how did you receive this information?

A. Mr. Buster informed me that they were conducting an investigation.

Q. You say "they". You mean who?

A. The—one of the Government bureaus.

Q. Did he mention which bureau?

A. He did, but I don't know that I recall which one it was. I believe it was the F.B.I., but I wouldn't be certain.

Q. Do you recall the occasion or occasions when he mentioned this to you?

A. Yes. I don't recall the exact date but——

Q. (Interposing) Well, the approximate time and place?

A. But he came into my office and informed me that they were——

[fol. 909] Mr. Haggerty: (Interposing) Well, I object to what Buster told him, may it please the Court.

Mr. Pomeroy: Just a minute, please.

Mr. Lipson: Your Honor, this is admittedly a sensitive area, but I think it is not only relevant but it is extremely relevant to this case.

The Court: It is not a question of relevancy, is it?

Mr. Lipson: Then I don't understand the objection, your Honor.

Mr. Haggerty: The objection is that he is relating a conversation by someone else of Mr. Buster. It is hearsay.

Mr. Lipson: Well, the conversation was, as I understand the witness's testimony, directly to the witness, and what Mr. Buster, a managing agent of the Defendant corporation had to say, certainly is admissible in this case.

The Court: It may be received.

Mr. Pomeroy: I object further on the ground of relevancy, your Honor, incompetent, irrelevant and immaterial to the issues in the case.

The Court: It may be received.

Proceed.

Q. (By Mr. Lipson, continuing) What did Mr. Buster tell you?

Mr. Haggerty: One further question. When was this, time—the time? Your Honor, if it is subsequent—subse-
[fol. 910] quent to the indictment in this case——

Q. (By Mr. Lipson, interposing and continuing) When was the time? Do you recall the approximate time?

The Court: I thought he cleared that up. It could not have possibly been beforehand. The gentleman has testified he left his employ——

Q. (By Mr. Lipson, interposing and continuing) To the best of your recollection, Mr. Roy, when did this occur, the time?

A. About the latter part of 1959, I think. I am not certain of that.

Q. Do you recall what Mr. Buster told you?

The Court: And where was this, in the office?

A. It was in my office.

And he told me that he had been informed that such an investigation was underway, and that he wanted me to go through my files and remove anything that might be damaging.

The Court: Investigation? What kind of an investigation?

A. That they were investigating the pricing practices employed in respect to lockbolts.

Mr. Lipson: I have no further questions of this witness, your Honor.

[fol. 911] Cross examination.

By Mr. Pomeroy:

Q. Mr. Roy, are you aware of the fact that the Government has brought a civil action against the Huck Manufacturing Company and the Townsend Company, as well as the criminal action now in trial?

A. I was so informed when I was supoenaed.

Mr. Lipson: Your Honor, may I interject for a moment?

Before the defense counsel are prejudiced, I think, based upon what we were talking about before, I may have misled defense counsel into not making a motion for a Jencks statement.

I don't want to be——

Mr. Pomeroy: (Interposing) We are not misled. We made a motion for Jencks statements at the beginning of the case, Mr. Lipson.

Mr. Lipson: Well, according to—according to the rules of the Jencks Statute, the motion was to be made after the witnesses had testified. I now hand——

The Court: (Interposing) We will assume the motion has been made. You may proceed.

Q. (By Mr. Pomeroy, continuing) Do you remember testifying on deposition in Los Angeles in the civil action I have just referred to, which is United States of America, [fol. 912] plaintiff, against Huck Manufacturing Company and Townsend Company, defendants, No. 11791, civil action, in the United States District Court for the Eastern District of Michigan, Southern Division, on January 25, 1963?

A. I do.

Q. In that deposition, do you remember being asked, by counsel for Huck Manufacturing Company, for any information you had relative to the matters in suit?

A. I do.

Q. Is that true?

A. Yes.

Q. Did you say anything at all at that time about the request of Mr. Buster that you just testified to in connection with the F.B.I. investigation?

A. Not specifically. However, I thought it was very well covered in my final statement that I made at the time.

Q. Do you remember being asked this question by Mr. Dickey, at page 44 of that transcript, Mr. Roy?

(Reading):

> "Mr. Roy, have we covered here, and have you told us everything that you know concerning this suit and concerning the lockbolt situation between Huck Manufacturing Company and the Townsend Company?"

And that your answer was:

[fol. 913] (Reading):

> "Well, I'm sure I haven't told you everything I know, because again, I say it would be impossible to relate four years of day-to-day situation handling in a two hour period but in general, the scope that we have covered constitutes the scope of my knowledge."

And you were asked the—do you remember giving——

A. (Interposing) Yes, I do.

Q. (Continuing)—being asked that question and giving that answer?

A. Yes, I do.

Q. Do you remember being asked further by Mr. Dickey, at the same page of the transcript of that deposition:

(Reading):

"And it's fair to represent it as what you know?"

And that you answered:

(Reading):

"Yes."

A. I recall.

Q. Do you recall that that was the question and that that was your answer?

A. Yes, sir.

Q. At that time do you remember being further asked [fol. 914] by Mr. Dickey, on the same page:

(Reading):

"You have, no doubt, been interviewed by representatives of the Government regarding the case and I just want to ask this question: Whether you have made known to us here then in this deposition all that you have made known to the Government in connection with the case."

And that you gave this answer on page 45:

(Reading):

"Again, the same answer I gave before, that I may have given them specifics, but in this area I have made known all to you that I have made known to them."

Do you remember being asked that question and giving that answer?

A. Yes, sir.

Q. Do you remember giving—being asked this further question by Mr. Dickey:

(Reading):

"That is, what you have made known to us fairly and truthfully represents what you have made known to them?"

And that you answered:

(Reading):

[fol. 915] "Yes."

Do you remember that question and that answer?

A. I do.

Q. Mr. Roy, when you came to the Cherry Rivet Division of Townsend Company, it was in what year, 1957?

A. That's correct.

Q. In the fall?

A. In September.

Q. September. And whom did you succeed in that—in the office of manager of aircraft sales?

A. Mr. Chilcoat.

Q. What had you done before you came to Cherry Rivet, in terms of employment?

A. Starting where?

Q. Well, let's start at the beginning.

A. I worked on a farm before I went to the University. Graduated and——

Q. (Interposing). I am talking about gainful employment.

A. I was gainfully employed on a farm, supporting myself. I went to the University, put myself through, was employed subsequent to the college training by Standard Oil Company of Indiana. I left them, went with General Motors Corporation.

The tenure with General Motors was interrupted by military service, where I became an experimental test pilot, was honorably discharged and returned to General Motors. [fol. 916] I left General Motors and went with a small company as its chief engineer. Towner Manufacturing Company in Santa Ana.

I left them, and became assistant chief engineer of Marine Manufacturing Corporation.

I was laid off in the general layoff they had, when Marine

dismissed their entire experimental engineering department, and I went back to General Motors.

Q. The same position?

A. Yes, sir, the same position.

Q. Same location?

A. Same location, same plant. I later left General Motors and went to United States Rubber Company and represented them in the Western Eleven States.

And following that, joined Cherry Rivet.

Q. You were with them four years?

A. That is correct.

Q. And then what was your next employment after that?

A. I went with an instrument company, Glassco Instrument Company in Pasadena.

Q. Glassco Instrument Company?

A. Yes, (spelling)—G-l-a-s-s-c-o.

Q. Pasadena, California?

A. Yes, sir.

Q. And when did you leave Glassco?

[fol. 917] A. About April, 1962.

Q. And with whom did you then become employed?

A. I became vice president in charge of sales of Sierra Instrument Company in Sierra Madre, California.

Q. Sierra—Sierra Madre?

A. (Interposing) Sierra Engineering Corporation in Sierra Madre, California.

Q. That was in 1962——

A. (Interposing) Yes.

Q. (Continuing) —that this happened?

A. Yes.

Q. And then are you still with that company?

A. No, sir, I left there to go with Olympic, where I am presently employed.

Q. Olympic Screw and Rivet Company?

A. Olympic Screw and Rivet Corporation, yes, of Downey.

Q. Is that the same company that Mr. Stau is an officer of or an official of?

A. Yes, sir.

Q. He was the witness that preceded you on the stand?

A. Yes, sir.

Q. What is your position with Olympic?

A. General sales manager.

Q. What is Mr. Stau's position?

A. He is vice president and general manager.

[fol. 918] Q. So Mr. Stau is your superior in Olympic, is he?

A. He is.

Q. Mr. Stau was also formerly at Cherry Rivet and Townsend Company, was he not? You knew that?

A. I understand he was.

Q. You, however, were not there, I take it, at the same time Mr. Stau was——

A. (Interposing) I was not.

Q. (Continuing) —at Townsend?

Are you still engaged in the aircraft phase sales or all kinds of sales, more or less?

A. Aerospace, the entire range, aerospace, commercial.

Q. The entire range?

A. Government. Yes.

Q. But, I take it, when you were at the Townsend Company, you were selling aircraft companies—I mean, manufacturers of aircraft, is that right?

A. Aircraft and Government only.

Q. Aircraft and Government. You didn't get into the commercial side of the field?

A. No.

Q. Had your prior experience been in the fastener industry, Mr. Roy?

A. It had not.

Q. So that your acquaintanceship with lockbolts and fast-

[fol. 919] eners derived from your employment with the Cherry Rivet Division?

A. Not entirely, but largely.

Q. Well, you are—you're still—you're still—you're in the fastener field again now, I understand, with Olympic?

A. Yes, sir.

Q. Except that you are not in the—it is not in the lockbolt field, is it? It is in the——

A. (Interposing) We do not make lockbolts.

Q. Yes, you are in basically the rivet, blind rivets?

A. Rivets, bolts, screws.

Q. Mr. Roy, you said on direct examination that you received—"you" meaning Cherry Rivet Division—price lists from the Huck Manufacturing Company as they were published from time to time by Huck, is that right?

A. That's correct.

Q. Did Townsend publish its own price lists?

A. Only in part.

Q. These price lists that you received from Huck, were they for their standard parts, the regular, basic, popular lockbolts?

A. They were for both, the standard and non-standard.

Q. And what form—what were they; were they all in one book or different books or what?

A. All in one large volume.

Q. How big was the volume?

A. Eight and a half——

[fol. 920] Q. (Interposing) Like a telephone book?

A. Excuse me.

Q. Like a telephone book or smaller, larger?

A. Eight and a half by eleven paper, approximately three-quarters to an inch thick.

Q. And this included both the regular or standard parts and the non-standard parts or products; is that right?

A. That is correct.

Q. Now, you said that Townsend partially published price lists? Is that what I understood you to say?

A. That's right.

Q. When did they publish them?

A. Only the standard portions of that book were published by Townsend.

Q. Was this Huck book that you are referring to distributed subsequently to the customers?

A. No, it was not.

Q. What did the customers get?

A. Only the published portion.

Q. Well, what was—I thought you told me about this eight and a half by eleven book, two and a half inches thick? That's published, isn't it?

A. No, this was not published. This was mimeographed and, to the best of my knowledge, within the Huck Company internal distribution only.

[fol. 921] And within our company, there was only one occasion in my four years that a copy of that ever got out of our inter-company hands.

Q. All right. What was the—what part—did the customers get a part of this book; is that what they got.

A. Yes, certain portions of that book were printed in another booklet. They were duplicated.

In other words, there was no difference. The portion that was lifted from that book was printed and disseminated widely.

Q. This was for the general standard products?

A. For those portions that were standard, yes.

Q. And—and the more popular prices and types and shapes of lockbolts?

A. Yes, I believe that's a correct answer.

Q. And the rest of the book, or the other part of it, had to do with so-called, you say, non-standard items?

A. Non-standard items.

Q. And these were, of course, for particular customers basically?

A. Yes.

Q. Not—they were not items that industry, in general, would be interested in?

A. Yes, the industry in general could have been interested in them, but the company might not have been interested in pushing that particular line. It might have ac- [fols. 922-925] counted for a large volume of business and——

Q. (Interposing) All right.

Dollarwise, it might have?

A. In dollars, yes, but it was not necessarily the line that we cared to push for further sales.

Q. Now, we—when you say the—that Townsend published its own price list, you are talking about the standard product price list, aren't you?

A. Yes.

Q. And the prices in this Townsend price list were the same as those in the Huck price list; is that not right?

A. That's correct.

Q. And you are saying that for the—if I understand you correctly, for these other items, these non-standard items that were not generally circulated, the Cherry Rivet Division or the Townsend Company followed and used the Huck price lists for these items when they, themselves, were selling the same products——

A. (Interposing) That's right.

Q. (Continuing) —is that right?
A. That's right.

• • • • • • •

[fol. 926] By Mr. Pomeroy:

Q. Mr. Roy, before lunch we were speaking about the price lists of the two companies, Huck and Townsend, and the method in which they were used at the Cherry Plant, Cherry Division. Do you remember receiving, as the manager of aircraft sales, a document in 1948—1958—called "Price Policies on Lockbolt Products"?
A. Not offhand. Can you refresh me?

(Whereupon, a document was marked as Defendants' Exhibit No. EE for identification by the reporter.)

Q. (By Mr. Pomeroy, continuing) I show you now a document that has been marked for identification Defendants' No. EE, and ask you to read it to yourself.

The Court: I just wanted to see the date.

A. (Witness complies.)
Q. (By Mr. Pomeroy, continuing) Have you read it?
A. I have.
Q. Are you able to state, after having read it, whether you have ever seen that document or a copy of such a document heretofor?
A. To the best of my knowledge, I have never seen this document before.
Q. This shows that in the lower lefthand corner:

(Reading):

"cc: E. B. Buster."

[fol. 927] Does it not?

A. That's correct.
Q. (Reading):

"(2)."

A. Yes.

Q. And for identification, this document is dated, in the upper right, June 9, 1958, and is entitled:

(Reading):

"Price Policy—Lockbolt Products"?

A. That is correct.

Q. Your statement is that you have not—you do not recall ever having seen the document before?

A. That's correct, I don't recall ever having seen it before. I believe this applies to commercial lockbolts, but I wouldn't know for sure.

Q. You wouldn't say positively that you hadn't seen it before, I take it?

A. To the best of my knowledge, I have never seen this.

Q. I will relieve you of it.

Mr. Roy, you were testifying on direct examination concerning documents identified as Exhibits 99, 100, and 101, I show you the original of those exhibits (handing exhibits to witness). I would just like to supplement your direct testimony slightly concerning them.

Exhibit 99 was, I believe you testified, prepared by you?

[fol. 928] A. That's correct.

Q. And it is on stationery of the Townsend Company, Cherry Rivet Division and says:

(Reading):

"Memorandum
"From * * * "

Or (Reading):

"To E. B. Buster.
"From John H. Roy," ?

A. That's correct.

Q. And the date is January 19, 1959?

A. Correct.

Q. And the subject is:

(Reading):

"Lockbolt 'Standards' "——

is that right?

A. Correct.

Q. The first sentence of it, Mr. Roy, reads:

(Reading):

"We are recommending the following in an effort to standardize on our lockbolt offerings."

Is it not?

A. That's correct.

[fol. 929] Q. And then follows six numbered paragraphs which comprise your recommendations, is that right?

A. That's right.

Q. Now, the—read the first paragraph for us, will you, please?

A. (Reading):

"1. Through Milo Ketchum's Engineering Department, we should advise the NASC, in connection with their current survey of lockbolt specifications, that we prefer Type II, Class 3 finish with lauric acid lube as a standard on bolt protruding head and countersunk head on all 'T' material lockbolts, and stumps."

Now, for the benefit of the Court and Jury, and also myself, what was this paragraph talking about?

A. Beg your pardon?

Q. What was this paragraph meaning to say in laymen's language?

A. Well, it is—it's a recommendation that the chief engineer's office, headed by Milo Ketchum, respond to the National Aircraft Standards Committee, for which NASC stands.

Q. Yes.

A. That Cherry's position would be that, as a company, we would like to have them put in their standard Type II, Class 3 finish with lauric acid lube on all steel material lockbolts.

Q. Wait just a moment. There's a——

A. (Interposing) I beg your pardon?

[fol. 930] Q. Where do you get steel material?

A. Well, "T" was a code for steel.

Q. I see. And what does Type II, Class 3 finish mean?

A. The Type II, Class 3 finish was a cadmium plated finish.

Q. Cadmium?

A. Cadmium plated finish——

Q. (Interposing) Yes?

A. (Continuing)—applied to the bolt, after which it was dipped in a—a dichromate acid solution and—for added, or additional corrosion protection.

Q. What was the purpose of the cadmium coating that you referred to?

A. Corrosion protection.

Q. Corrosion protection?

A. Yes.

Q. And dichromate finish was—was that also corrosion protection?

A. Yes, added corrosion protection.

Q. Now—now, is lauric acid something, a third thing, or is it part of the cadmium or the chromate plating?

A. No, it is the third and the last added substance, which is a lubricant. We call it a greasy-type lubricant.

Q. Lauric acid is a lubricant. That is the way these lockbolts were—were finished, with the lubricant, and then stocked that way and shipped that way normally?

[fol. 931] A. This varied, but generally speaking, I believe they were put in stock with lauric acid lubricant on them.

Q. Now, what does Type II mean, Type Roman Numeral Two, in this first paragraph?

A. Well, Type II, Class 3 together mean the cadmium plate, with the dichromate finish. What Type II refers to, when you pick it out, I don't know that I would be qualified to answer that.

Q. What does dichromate mean?

A. Dichromate?

Q. Yes.

A. That's a—a salt, or, in other words, a chemical that goes into the water solution, aqueous solution.

Q. Did this numeral and class have anything to do with the—give any indication of the color of this finish?

A. Yes, it—the Type II color, it covers—I believe the —in the military specifications, where types of finish are

called out, to the best of my recollection, in that Type II it does refer to color.

Q. What is the color?

A. Well, I believe it is referred to as irridescent bronze, olive drab or within that color spectrum.

Q. Have I heard it referred to as gold?

A. Yes, gold is a—was what we, within the trade, called it.

Q. I see. Now, paragraph two says what, Mr. Roy?

[fol. 932] A. Want me to read it aloud?

Q. Yes.

A. (Reading):

> "2. Having advised the NASC accordingly, it is recommended that we adopt as a standard, insofar as our manufacturing, stocking, and marketing are concerned, Type II, Class 3 finish with lauric acid lube on both protuding head and countersunk head lockbolts."

And then there's a sub paragraph under numeral two.

Q. Just a moment there, please.

Paragraph two was representing that you adopt it as a standard and in paragraph one—and in paragraph two, does that—when you have done that, you would advise NASC or the—what did you call it, the National Association of——

A. (Interposing) National—National Aircraft Standards Committee.

Q. Oh, National Aircraft Standards Committee.

Was this a part of making this thing a standard item to advise that committee?

A. If I heard you correctly, I think you misinterpreted paragraph one in your summary just now.

Q. Paragraph one says that you preferred this, that you make a decision to manufacture lockbolts this way?

A. No, paragraph one is asking our engineering department to tell the National Aircraft Standards Committee [fol. 933] we would like to do this.

Paragraph two, as I have read it so far, is—is telling us that, assuming that engineering does their half, manufacturing is to do the first part of paragraph two.

So, this is an instruction, if approved.

Q. To the manufacturing end?

A. To the manufacturing department.

Q. All right, thank you.

Now, the next paragraph, under paragraph two, says what?

A. (Reading):

> "Our standards pages, as currently being revised, should call out Type II, Class 3 finish as standard, with Type I, Class 3 finish coated as optional, identified by parts number suffix."

Q. Now, what does Type I, Class 3 mean?

A. Type I, Class 3 means without the chromate dip, just cadmium.

Q. Just cadmium?

A. To the best of my knowledge.

Q. Doesn't it also involve a clear dichromate finish, as distinguished from the amber or gold dichromate finish referred to in paragraph one?

A. Not—to my knowledge, it does not.

Q. In other words, just the cadmium and no chromate finish?

[fol. 934] A. That's it. That's it as I recall it.

Q. Mr. Roy, just pausing here for a moment. This was early 1959. You recall, do you not, that there had been a good deal of problems encountered about this matter of the finish to put on lockbolts and the protective covering to put on them in the aircraft industry between Townsend and the aircraft, certain aircraft industry manufacturers, as well as with the Huck Manufacturing Company?

A. I do.

Q. This had been going on for some months, had it not?

A. Well, let me see. Rather than answer that yes or no, for some time.

I don't know whether it was months or weeks, but for some time, yes.

Q. Could it have been a year?

A. In deference to this memorandum of January 19, I don't recall how long it had been going on when this was written.

Q. But it had been going on for some time, in, I take it,

that there were some controversies about this subject, some differences of opinion about it?

A. Very definitely.

Q. Am I correct in saying that at least the Boeing Aircraft Corporation wanted the producers of lockbolts to go to this gold dichromate finish, this type II, Class 3 finish?

A. They did.

[fol. 935] Q. And am I also correct in understanding that Townsend had held out for the clear finish or maybe just the cadmium finish, anyway, Type I, Class 3, and didn't want to go to this gold finish?

A. No, that's not—not quite correct.

Q. Wasn't it the position of Townsend that their Type I, Class 3 finish would be adequate protection and that the other was not necessary?

A. No. Would you like an explanation or just no?

Q. Well, I think you might explain it, Mr. Roy, if you will.

A. Townsend——

Q. (Interposing) Or your recollection of it.

A. To my best recollection, we did not object to the gold chromate color and were perfectly willing to abide by Boeing's request and supply them gold.

But there were specifically three other aircraft companies who did not want the gold, and so this action memorandum, if we had gone to gold as a standard, would have left three other companies, besides Boeing, very unhappy over having their bolts gold, when they wanted them without the gold coloring.

Q. But there wasn't unanimity in the aircraft industry and there wasn't unanimity in the Huck lockbolt industry, either, was there?

A. That's correct.

Q. And, I take it, therefore, that this recommendation [fol. 936] which was finally arrived at, and represented by this memorandum of yours of January 19th, represented a retreat or capitulation by Townsend on this particular issue, is that not correct; in other words, you then here recommended to make the gold dichromate a standard; is that right?

A. Well, just let me read this document, if you please.

(Short pause.)

Now, would you ask that again?

Mr. Pomeroy: Would you read the question back?

(Whereupon, the last question was repeated by the reporter.)

A. From a sales department standpoint.

Q. (By Mr. Pomeroy, continuing) Well, you can't—you just answer—just answer the question, and then give an explanation, if you want to explain it.

A. Yes, this was a retreat.

Q. Mr. Buster, in the momorandum, Exhibit 100 attached —or which you have in front of you, the memorandum of January 22 date: (Reading):

> "You will recognize that these recommendations represent a backing down on our part on clear chromate."

I assume that's what he's referring to in that letter, in that particular passage? You will agree with that, will you not?

A. Yes, I would assume so, also.

[fol. 937] Q. Now, Mr. Roy, the third paragraph of Exhibit 99 has two subparagraphs, recommending the following non-standard price sheets be made applicable; and then there is an A and B. A is headed "Degreasing." Degreasing, I take it, means removing grease; is that right?

A. Or leaving it off, yes.

Q. This grease, I take it, is another word for the lubricant you previously referred to?

A. Yes.

Q. Which would be the lauric acid treatment?

A. Yes.

Q. The treatment that you referred to?

A. Yes.

Q. And you were recommending there an addition to your standard regular price of two per cent for that operation. That refers back to these dichromate finishes, does it not?

A. That's correct.

Q. Referred to in paragraphs one and two. And if I interpret this correctly—just to shorten it—since you have

—you're recommending that Type II, Class 3 be made a standard finish and Type I, Class 3, non-standard, or optional, that then occasions the increase in the price for the optional and non-standard items of Type I, Class 3; is that right?

A. Yes.

Q. Now, turn to Page 2, Mr. Roy, Paragraph 4. Wou- — [fol. 938] that, please

A. (Reading):

> "No two lockbolt parts varying somewhat in finish, tolerances, etc., should be sold under the same part number. Each part should have its own number (or suffix) and have its own price schedule."

Q. This matter of numbering referred to here, did that represent a change in policy of prior Townsend practice?

A. To a little degree, yes.

Q. Paragraph 5, Mr. Roy, would you read that, please?

A. Yes, Paragraph 5 (Reading):

> "We recommend that so-called standard lockbolts in 'T' material in the future be in grip lengths up to and including -12, and that all grip lengths beyond -12 in 'T' material be considered non-standard, subject to non-standard minimums, pricing, etc."

Go on

Q. Does that represent a change in prior practice?

A. I'm not sure this did. This may have been only a restatement of our practice. I couldn't say for sure on that.

Q. Your opening sentence of your memorandum states (Reading):

> "We are recommending the following in an effort to standardize on our lockbolt offerings."

I would assume, Mr. Roy, that if this practice had been [fol. 939] in existence, you wouldn't have to be recommending it at this point, would you?

A. Well, some things that existed were never made policy. They were—would come and go, depending upon the——

Q. (Interposing) All right.

A. (Continuing)—exigencies of the moment.

Q. And you are not able to say whether this was one of these come and go things or whether it was new?

A. No, not that particular paragraph. I don't recall whether that was something new or just firmed up.

Q. In any case, you wanted to make it a standard, stated policy for the Townsend Company, is that right?

A. Yes. It apparently had not heretofore been stated.

Q. Right. Now, there was another paragraph under five. Will you just read that, please?

A. Yes. Continuing under paragraph five (reading):

> "We also recommend that all aluminum lockbolt pins be made non-standard and subject to non-standard minimums, pricing, etc. Also, the standard pages on same be marked, 'Not available for new design.'"

Q. All right. Do you know how that particular recommendation originated; was that another NASC recommendation, National Advisory Committee or National Aircraft Standards Committee?

[fol. 940] A. Well, you have asked me two questions, now. Do I know how it originated and whether it was NASC.

Q. Yes, I asked you two questions. Can you answer them both?

A. This was not a recommendation of the National Aircraft Standards Committee. To the best of my recollection, this was a recommendation jointly from Huck and ourselves that aluminum be made non-standard.

Q. That it be made non-standard, right. Now, I think you testified this morning—excuse me—Paragraph 6 is the release date, is it not, or the effective date which you were recommending and has nothing to do with the new policies or prices that you were suggesting? It was a date paragraph?

A. That's correct.

Q. Now, Exhibit 101, Mr.—excuse me just a moment. Exhibit 100 is the memorandum which Mr. Lipson read into the record this morning; is it not?

A. That's correct.

Q. And that is the memorandum from Mr. Buster to Mr.

Horst, where he attached and forwarded your memorandum of January 19th that we have just examined——

A. (Interrupting): Correct.

Q. (Continuing): — is that right?

A. That's correct.

Q. Now, February—excuse me—Exhibit 101, dated February 9, 1955, I believe you testified this morning was the [fol. 941] —what did you call it, policy statement or standards statement—which resulted from your January 19th recommendations?

A. I don't recall what I—what adjective I used to describe it, but this was the implementing or making policy of a previous recommendation or parts thereof.

Q. All right. And this emanated from or sprang from your letter or memorandum of January 19th; it that right? It covers the same subject matter, does it not?

A. Some of the same subject matter, yes.

Q. And——

A. (Interposing): Most of the same.

Q. Isn't it true that this February 9 memorandum puts into practice or effects all of the recommendations of your January 19th memorandum, or substantially all of it, at any rate?

A. Substantially all of it, not all.

Q. Mr. Roy, you said, I think, this morning that you were discharged or asked to resign—I don't know just how you put it—from the Townsend Company in 1957? Who discharged you or asked you to resign?

A. May I please correct you? In 1961.

Q. I beg your pardon. I got your first year instead of the last.

A. Mr. Buster.

Mr. Pomeroy: Mr. Buster. That's all.

Mr. Haggerty: No questions.

[fol. 942] The Court: Any redirect?

Mr. Lipson: Yes, sir.

Redirect Examination

By Mr. Lipson:

Q. You took—oh, do you have 99 up there, Mr. Roy?
A. 99, 100 and 101.
Q. Hold on to it, please.
We have already examined 99 very thoroughly, but I would like to ask a few more questions about it.
Particularly the—this is the first of the three documents, the recommending memorandums.
Now, paragraph three, referring to 3-a, would you please read to us that sub paragraph 3-a?
A. Paragraph 3-a, (Reading):

"Degreasing: On Boeing orders for 'dry' or degreased pins (less lauric acide lubricant) the price schedule for this part BAC prints * * * "

Q. (Interposing) Will you stop there and explain what BAC prints are?
A. Boeing Aircraft Company.
Q. Will you continue, then?
A. (Reading, continuing):

"* * * would be higher than its lubed counterpart by [fol. 943] two per cent."

Q. What does that mean in lay language?
A. Well, it means, when they specify, they don't want the lubricant on them, there's a surcharge of two per cent added on to the regular book price.
Q. Now, how did that two per cent figure develop? Do you recall?
A. Yes.
Q. Would you tell us how you arrived at this two per cent recommendation?
A. It was arrived at in my meeting with Mr. Mathews in Inglewood.
Q. Would you refer to the implementing memorandum? That's the one marked Government's Exhibit 101.
Is there any place in that implementing memorandum where this two per cent surcharge figure is implemented as

part of the policy of the Townsend Company, price policy of the Townsend Company, Cherry Rivet Division?

A. Yes, on the second page.

Q. Would you read that particular part, please?

A. (Reading):

"Some customers, particularly Boeing Airplane, when ordering to BAC prints, insist on dry or degreased bolts. (Less lauric acid lubricant) These bolts will show a part number suffix, 'CD.' Please note that this is a change in the meaning of the coding 'OD'."

[fol. 944] Q. Then you gave an example, I assume?

A. Yes.

Q. Will you skip the example and read the next paragraph?

A. (Reading):

"When pricing 'CD' suffixed bolts, add two per cent to the price for all series, rounded off to the nearest five cents."

Q. Is there any more dealing with that particular matter?

A. The next paragraph.

Q. Would you read that as well, then?

A. (Reading):

"Special sheets containing the 'W' and 'CD' suffixed extra charges are being prepared, and will be sent to those of you where applicable when ready."

Q. I would like to refer you to paragraph numbered 3-b on Government Exhibit 99, the recommending memorandum.

Do you have that?

A. I have it.

Q. Would you read that paragraph, please?

A. Paragraph 3-b, (Reading):

"On customer orders for standard lockbolts with the Type I, Class 3 finish (rather than the standard Type II, Class 3 finish), the price schedule for this suffix coded part number would be higher than its non-suffixed counterpart by five per cent. This addition would

[fol. 945] not show on invoices as an extra, since a separate price schedule would be established for such suffixed print parts."

Q. Now, do you recall how you arrived at this five per cent figure that you refer to here?

A. Well, that again was the final results of my meeting with George Mathews in Inglewood.

Q. Was that put into practice in any—put into effect as company policy in any part of the implementing memorandum, Government Exhibit No. 101?

A. Yes, it was on page one.

[fol. 946] Q. Would you read the applicable portion?

A. This may not be where you wish it started, but I will start at the next to the last paragraph. (Reading):

"At the present time, Douglas, Lockheed, and Northrop will not accept countersunk bolts with a gold chromate finish. From time to time there may be other customers who also will object to the gold, and like Douglas, Lockheed, and Northrop, will want clear finish on their bolts, either countersunk or protruding head. Where the customer requires a clear finish, care should be taken to see that the 'W' suffix is added to the part number, even if it is missing from the customer's purchase order.

"On all orders received after February 9, 1959 for 'W' coded bolts, use the price sheet, plus 5% rounded off to the nearest 5¢."

Q. Now, this Inglewood meeting that you referred to between yourself and Mr. Mathews, how come you went? Do you recall why you went to this Inglewood meeting?

A. Yes.

Q. Would you tell us why?

A. This had been a problem, as Mr. Pomeroy suggested for sometime—exactly how long I don't recall now—but it had been—there had been price discrepancies in the market place due to these misunderstandings, or maybe I should [fol. 947] correct that and say due to our offering both clear and gold bolts and also with regard to our offerings on lubricants.

These discussions had been back and forth on the man-

agement level above me and Mr. Mathews was coming to California and it was suggested that perhaps I should meet with him.

Q. Who suggested it?

A. Well, it would be—Mr. Buster suggested that I meet with him and see if we couldn't come to some agreement.

Q. Mr. Roy, have you on any occasion ever discussed the testimony that you might give or intended to give, or expected to give in this proceeding with Mr. Stau your employer?

A. I have not.

Q. Do you recall, Mr. Roy, the date of the deposition that Mr. Pomeroy referred to in the early part of his cross-examination, the date you took this deposition—or was taken of you?

A. The date that my deposition was taken?

Q. That's right. You phrase it much better than I do.

A. Not the exact date, but it was this year sometime.

Q. Do you recall the month?

A. I believe January.

Q. Let me show you the cover of this. Does it refresh your recollection as to the date?

[fol. 948] A. Yes, January 25.

Q. Of this year?

A. Of 1963.

Q. Mr. Roy, when did you first recall to your mind the matter about the instructions you received concerning your duties in respect to the FBI investigation that you told us about on direct examination; when did you remember the incident?

Mr. Pomeroy: What was that question, please?

Q. (By Mr. Lipson) When do you remember the incident about this FBI matter that you discussed on your direct examination?

Mr. Pomeroy: No objection.

A. Subsequent to the deposition, and, I believe, subsequent with my meeting with you, in Downey.

Q. Can you narrow it down to a more specific time?

Well, strike that question.

When did you first inform me of this event?

A. In our interrogation immediately prior to this proceeding.

Q. When?

A. Let me see. I believe it was in our Sunday meeting.

Q. This past Sunday?

A. Yes.

Mr. Lipson: I have no further questions.

The Court: Do you desire further cross?

Mr. Pomeroy: Mr. Dickey is looking for something, your Honor.

[fol. 949] Mr. Dickey: We may, your Honor.

Mr. Pomeroy: If the Court please, may I ask Mr. Roy one or two further questions, occasioned by the re-direct examination?

Cross examination (Continuing)

By Mr. Pomeroy:

Q. Mr. Roy, this morning I referred you to the deposition which you gave in Los Angeles on January 25th in the civil action by the United States against the Huck Manufacturing Company and Townsend Company, No. 12791, in this Court. I now refer you again to that deposition, and I will ask you if you were asked the following questions, and gave the following answers, and I believe I asked the questions.

The Court: Would you give the page, counsel, please?

Mr. Pomeroy: I did, your Honor. January 25, 1963.

Mr. Lipson: The page number.

Mr. Pomeroy: Oh, page, excuse me, sir. Page 68.

Q. (By Mr. Pomeroy, continuing) (Reading):

"Q. Who was your counterpart at Huck Manufacturing Company during the period that you were with Townsend?

"A. They had two. George Mathews during most of the time and the last—I guess the last few months was [fol. 950] a man named Callahan, I believe."

Do you remember giving that—hearing that question and giving that answer?

A. I do.

Q. And you were then asked (Reading):

"Q. Did you ever discuss with either of those gentlemen the subject matter of this lawsuit—that is to say that there was a governmental investigation in progress?

"A. No."

Do you remember giving that—hearing that question and giving that answer?

A. I do.

Q. You were then asked (Reading):

"Q. Did you ever discuss with Mr. Mathews or Mr. Callahan this question of Townsend following Huck's prices on aircraft lockbolts?

"A. No. For the record, I never had a conversation that I recall with Mr. Callahan and I don't recall I even spoke to him. I never met him. I don't know that I said hello to him. It could be that I have. I don't recall ever having done it."

Do you remember that question and giving that answer?

A. I do.

Q. The next question (Reading):

[fol. 951] "Q. But you did know Mr. Mathews?

"A. Yes, I know Mr. Mathews."

Q. Do you remember that question and that answer?

A. I do.

Q. This deposition, to which I referred, was taken under oath, was it not, Mr. Roy?

A. That is correct.

Q. Mr. Mathews testified on the stand here yesterday, did he not?

A. That is correct.

Q. He has now been excused from this case, hasn't he?

A. To the best of my knowledge he has.

Mr. Pomeroy: Excuse me one moment, your Honor.

(Whereupon, a document was marked as Defendant's Exhibit FF, for Identification by the Reporter.)

Mr. Pomeroy: With the Court's permission I will show this to Government's Counsel.

Q. (By Mr. Pomeroy) Mr. Mathews—I am sorry. I beg your pardon. Earlier I showed you an Exhibit marked Defendants' EE, which you stated you could not recall having seen?

A. That's correct.

Q. I now show you another paper which has been marked Defendants' FF, and ask you to examine it and tell me whether or not that refreshes your recollection as ever having seen Exhibit EE?

A. It does.

[fol. 952] Q. Does it refresh your recollection so that you can now state that you have seen Exhibit EE or that you have not seen it?

A. I have seen it. It bears my initial at the top.

Q. Now, I show you Exhibit EE again, and I will ask you to read it, please, from the top on down.

A. This is a piece of correspondence without letterhead. It is addressed to R. E. Casner——

The Court: (Interposing) It is obviously a copy of a memo. Go ahead.

A. Yes, it is a carbon copy.

The Court: I say that merely because you said it was without letterhead.

A. Yes. Dated January 9, 1958, presumably to R. E. Casner. Maybe I better just read——

Mr. Haggerty: (Interposing) R. E. Casner?

Q. (Continuing) The top line is R. E. Casner?

A. R. E. Casner, yes. To:—second line, P. E. Horst: M. B.—third line—

Q. (Interposing) Excuse me. Who is Mr. Casner, if you know?

A. Mr. Casner had—he was an employee of Townsend.

Q. What kind of an employee? I mean what was his job?

A. He had two jobs while I was there.

Q. What was he on June 9, 1958?

A. I don't recall exactly which one he did have then.

The Court: Which two did he have?

[fol. 953] A. Mr. Casner was not in the same plant that I worked, and his exact title also I would not know, but I believe at one time, originally he was in charge of the manufacturing facility and later became a vice president in charge of a division.

The Court: All right, proceed.

Q. (By Mr. Pomeroy) Does that memorandum have some printed material on the right hand side?

A. Yes, it does.

Q. What is that?

A. Rubber stamped or—of some type or perhaps printed.

Q. Excuse me. May I glance at it? Is that a route, what you might call a route list or a form whereby you can route the memorandum internally?

A. It's not a type that was used in our plant but—I mean, I assume that's what it meant in this plant.

Q. All right. Who was Mr. Horst, by the way?

A. Mr. Horst has been identified previously, as, to the best of my knowledge, being assistant to the president Mr. Dickenson.

Q. All right, Now, go ahead, will you please?

A. Third line. (Reading):

"Price Policies-Lockbolt Products * * *".

Mr. Lipson: Your Honor, I will object to this document at this time on the ground that it is completely self-serving [fol. 954] and, therefore, has no probative value whatever to this case.

Mr. Pomeroy: May I give a copy to your Honor?

The Court: You know, I am beginning to wonder, if that were true, how many exhibits there would have been in the Government's case.

Mr. Lipson: Your Honor, the Government hasn't been responsible for offering any of them.

The Court: It may be received.

Q. (By Mr. Pomeroy) Will you continue, please, Mr. Roy?

A. Paragraph 1—this entire line is underscored (reading):

"Products covered by any price published by any producer: A, under 1 (reading, continuing):
"If we do not have an established price, it is our policy to quote the same price as our competition (our reason for doing this has nothing to do with our license * * *."

The Court: Our reason for doing this.

A. Oh. (Reading, continuing):

"* * * our reason for doing this * * *". Excuse me.

(Reading, continuing):

"* * * had nothing to do with our license or any other agreement; it is simply the same policy we try to follow in pricing products that are equal to our competitors in order to avoid chaotic market conditions.)"
[fol. 955] Paragraph 2. The heading is underscored.
"Products not covered by any published list:"

Subparagraph a.

"(Reading): If we develop the item: estimated selling price.
"Estimate selling price and quote in line with engineer's comparable products."

Subparagraph b.

"(Reading): If developed by our competitor."

One, as a subparagraph.

"(Reading): Undesirable quantities."

And under that (Reading):

"Use method 2 above or higher."

Subparagraph 2, under B.

"(Reading): Desirable quantities.
"Get special policy from one of the following:

P. E. Horst, F. R. Dickenson, R. E. Casner (if foregoing are not available)."

And as a lone paragraph at the bottom (Reading):

"Under no circumstances is there to be any collaboration on prices with our competition on this product or any other."

CC to: E. B. Buster (2).

Q. Thank you, sir.

Mr. Pomeroy: I offer Exhibit EE in evidence, if the [fol. 956] Court please.

Mr. Haggerty: It has been received. The Court admitted it before, Tom.

The Court: It has been received. I received it.

Mr. Pomeroy: Had you? I beg your pardon. Lapse of memory. That's all.

The Court: Any further cross examination?

Mr. Haggerty: No further. No cross here.

The Court: Any further direct?

Mr. Lipson: No further cross examination. I am sorry. No further direct examination.

The Court: May the witness be excused?

Mr. Lipson: I would recommend it, sir.

The Court: He comes too, from sunny California.

Mr. Pomeroy: He may be as far as I am concerned.

Mr. Haggerty: He may be.

The Court: All right, you are excused, sir.

(Whereupon, the witness was excused.)

The Court: We will take a recess.

(Whereupon, a short recess was taken.)

[fol. 957] AFTER RECESS

The Court: Our delay has been not unfruitful so—we are going to put in some exhibits—the Government is going to put in some exhibits and we will shorten some time.

OFFERS IN EVIDENCE

Mr. Lipson: Thank you, your Honor.

The Government offers exhibit previously identified as Plaintiff-Government Exhibit 103.

Mr. Pomeroy: Defendant Townsend and Dickenson have no objection.

Mr. Lipson: The document is headed:

"Townsend Company Sales Of Lockbolts 9/1/54 to 8/31/61. It is a tabulation——"

Mr. Pomeroy: (Interposing) Excuse me, Mr. Lipson, Mr. Haggerty hasn't spoken.

The Court: Mr. Haggerty did not offer it.

Mr. Haggerty: No objection.

The Court: No objection. All right.

Mr. Lipson: The tabulation of four columns. The first column is the date. The second column is aircraft. The third column is commercial. And the fourth column is total.

Then there is a bottom total figure for aircraft for the entire period; commercial and a final grand total.

[fol. 958] The total for the entire period, aircraft and commercial, $9,836,846.

The Court: That covers what period; total period?

Mr. Lipson: September 1, 1954 to August 31, 1961.

Government Exhibit marked for Identification 104; is there any objection? I offer the Exhibit.

Mr. Dickey: 104.

Mr. Pomeroy: If the Court please, we object to this document because of its date, February 10, 1956, indicating that it was written and received prior to the—beyond the period of limitations involved in this action.

The Court: In other words, this is the same objection you have heretofore had of documents of similar nature?

Mr. Pomeroy: Well I have had some other objections to some documents, but this is the only objection I have to this one, your Honor.

It is also within the period of two years after September 14, 1954.

The Court: That is what I had reference to. Mr. Haggerty, the same objection?

Mr. Haggerty: Same objection may it be noted, may it please the Court.

Mr. Hickey: And the further objection, too, that it is im-

[fol. 959] material and a Townsend internal document and not binding on Huck and Armour.

The Court: Because it is prior to the period, you mean?

Mr. Hickey: Because it is prior to the period, and then because, also, as I say, it is immaterial and it is by Townsend, internal document, and not binding on Armour or Huck.

The Court: I think—Or strike it. It may be received. And I think it is still controlled under those four cases that I have heretofore given you.

. . . . . .

[fol. 960] The Government now offers Government Exhibit 105, marked for Identification.

The Court: What is the date of that?

Mr. Lipson: The date is August 29, 1957. If there are no objections, I will read it.

The Court: I hear none.

[fols. 961-962] Mr. Pomeroy: I object only, your Honor, to the handwritten notations which a moment ago I——

The Court: (Interposing) That you cannot identify them, is that right?

Mr. Pomeroy: That's right.

The Court: It might be borne in mind that the Government does not know where they came from either.

Mr. Lipson: Your Honor, the handwritten notation came with the document when it was put in the Government's possession.

The Court: All right. As I recall, that which is important to you is not with respect to the handwritten part anyway, it has to do with some other matters.

Mr. Lipson: I think in this case, your Honor, the handwritten material would be of relevance, particularly the notation on the very bottom. That is in the middle section. If you don't have a copy, may I——

(Handing copy to the Court.)

Mr. Dickey: I object to it on behalf of Huck and Armour, on the grounds it is a Townsend internal document, and not binding upon either Huck or Armour. And that it is immaterial.

. . . . . .

[fol. 963] Mr. Lipson: The Government now offers Exhibit marked 106, for Identification.

The Court: What is the date of that?

Mr. Lipson: I am sorry. I offer Government Exhibit marked 106, for identification.

The Court: What is the date?

Mr. Lipson: December 30, 1957, your Honor.

Mr. Pomeroy: I have no objection.

Mr. Dickey: Object on the ground it is immaterial.

The Court: It may be received.

* * * * * * *

[fol. 964] The Government now offers Government Exhibit marked 107, for Identification.

The Court: The date?

Mr. Lipson: It is dated April 24, 1958, your Honor.

Mr. Dickey: We object to this on behalf of Huck and Armour on the ground that it is immaterial and also on [fol. 965] the ground that it is an internal Townsend document, not binding upon Huck or Armour.

The Court: It may be received. Although I sound curt, Ladies and Gentlemen of the Jury, we have gone over these before and I have considered them, and I do not want you to think I am doing something here that is without due thought.

Mr. Pomeroy: If I may, your Honor, I would like to have my objection, on the ground that the sender of the letter is described as a Mr. W. R. Wyckoff, and there is no showing that he is a person authorized to—an officer of the Townsend Company, in a position to make those binding statements.

The Court: That has a little different——

Mr. Lipson: (Interposing) Is this offered by Wyckoff, you say?

Mr. Haggerty: Yes. From W. R. Wyckoff.

Mr. Lipson: Your Honor, this is a document written on the format of a Townsend Company memorandum, addressed to known and identified officers of the Townsend Company, and it bears what purports to be a signature as well. If it is necessary, your Honor, to have Mr. Wyckoff identified as an agent of the Townsend Company, we can call the witness present in court at this time to do so.

The Court: These were given to you subject to the sub-
[fol. 966] poena for the books and records?

Mr. Lipson: No, your Honor. This particular document was made available, I believe, to the Federal Bureau of Identification when they requested certain voluntary compliance of the Townsend Company.

The Court: Well it may be received.

• • • • • • •

[fols. 967-1046] The Government rests, your Honor.

• • • • • • •

[fol. 1047] IN THE UNITED STATES DISTRICT COURT FOR THE EASTERN DISTRICT OF MICHIGAN

GOVERNMENT'S EXHIBIT No. 1

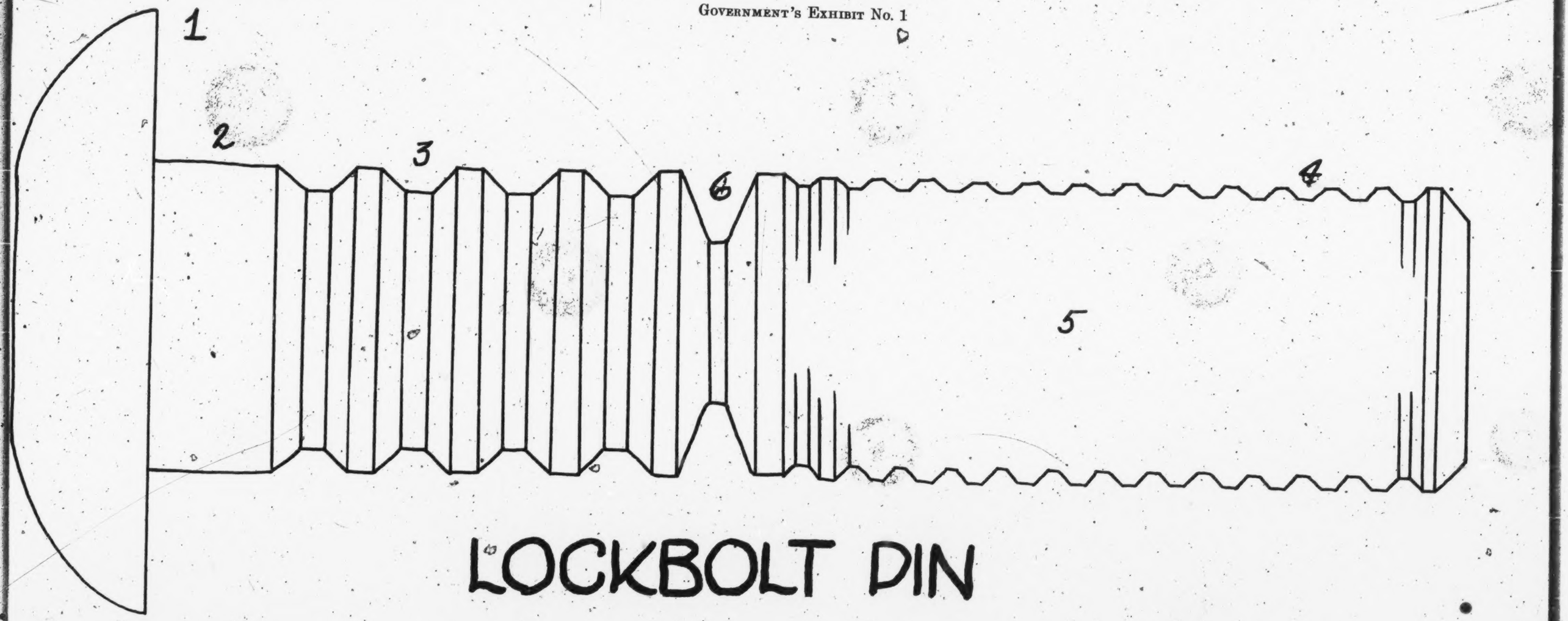

LOCKBOLT PIN

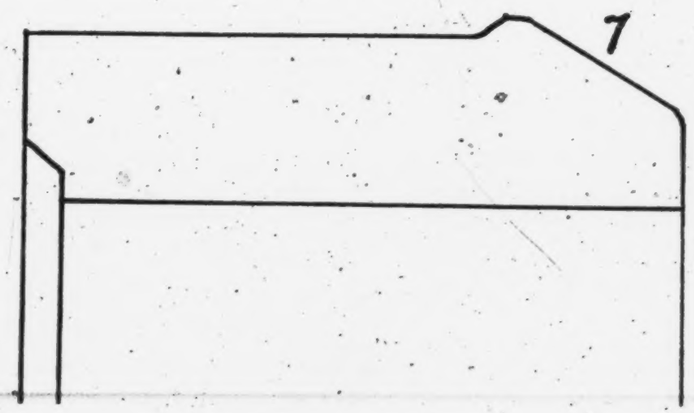

1. HEAD
2. SHANK
3. LOCKING GROOVES
4. PULL GROOVES
5. PIN TAIL

[fol. 1048]. IN THE UNITED STATES DISTRICT COURT FOR THE EASTERN DISTRICT OF MICHIGAN

GOVERNMENT'S EXHIBIT No. 2

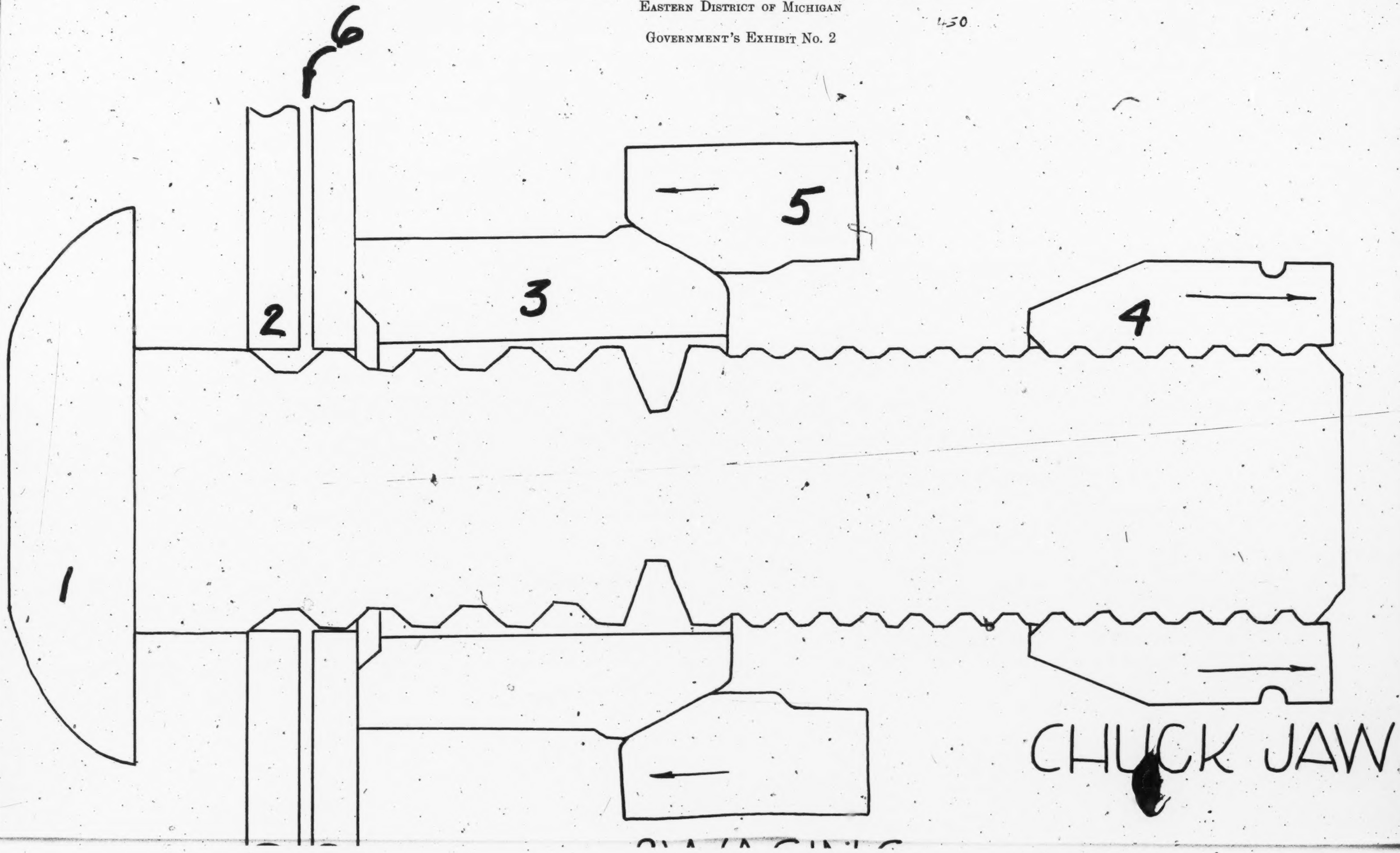

GOVERNMENT'S EXHIBIT No. 3 451

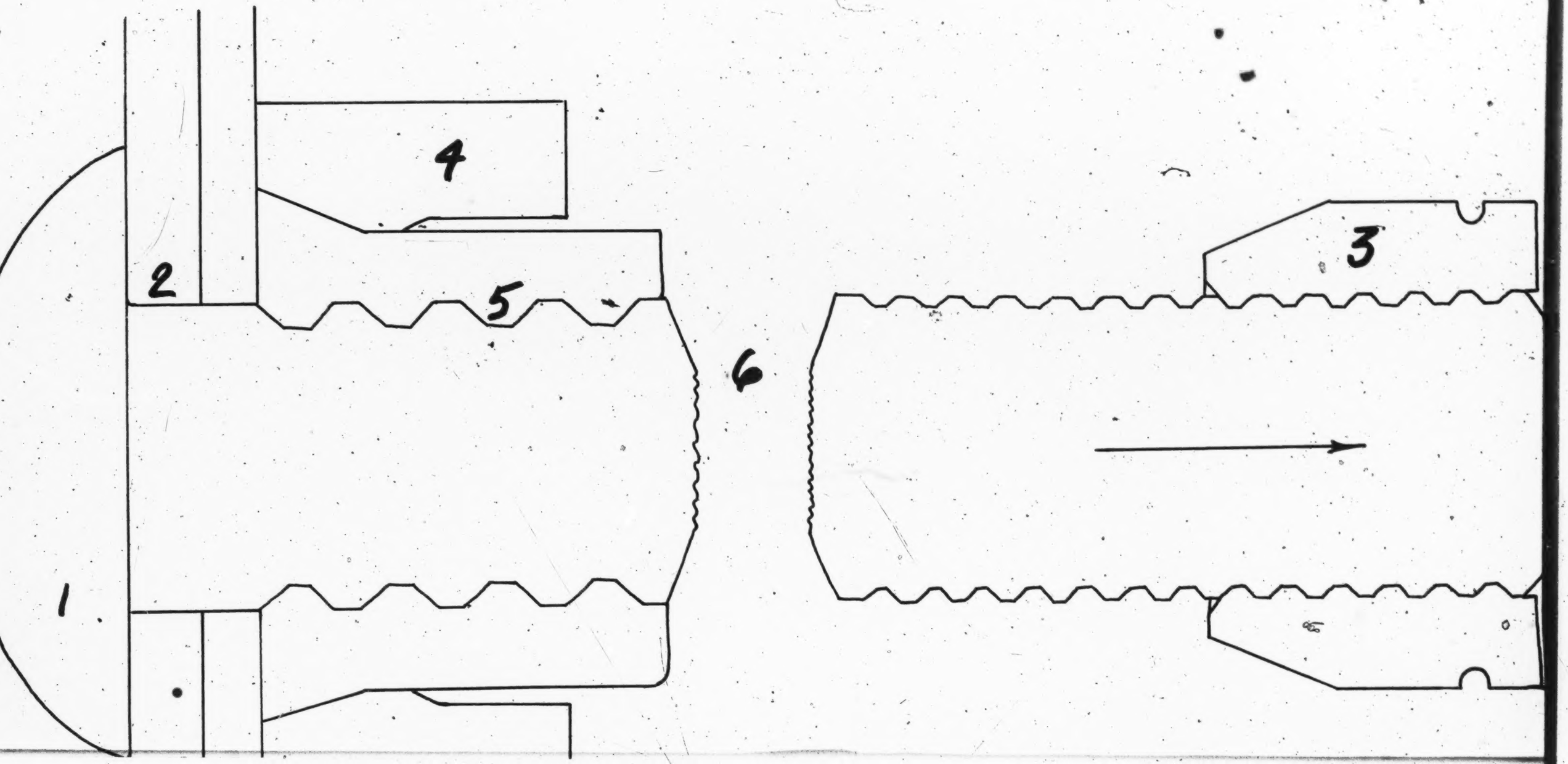

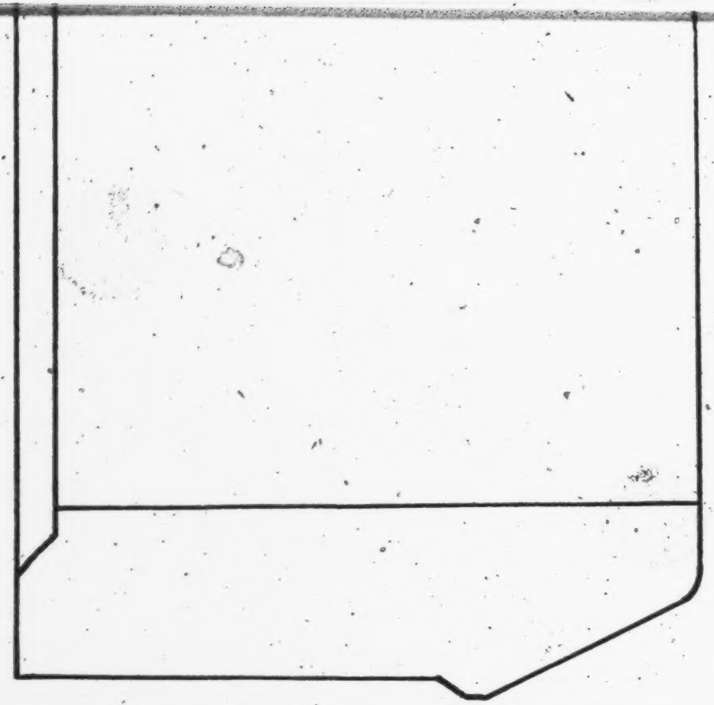

COLLAR

4. PULL GROOVES
5. PIN TAIL
6. BREAKNECK GROOVE
7. BEAD

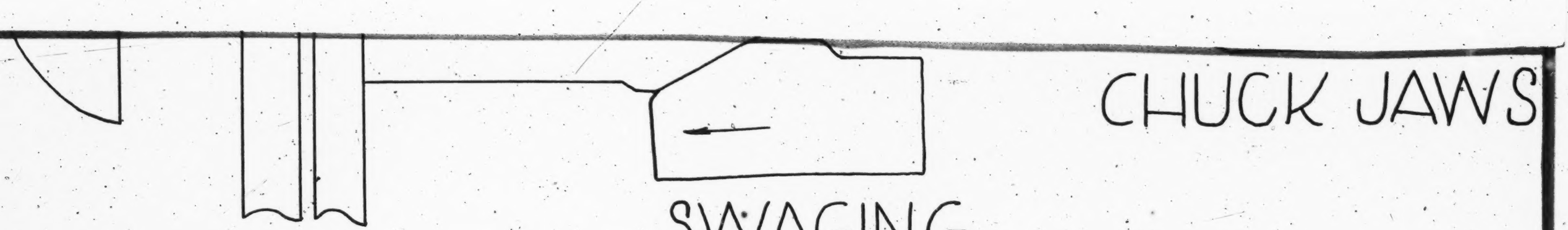

LOCKBOLT DRIVING CYCLE

LOCKBOLT INSTALLED

[fol. 1050] IN THE UNITED STATES DISTRICT COURT FOR THE EASTERN DISTRICT OF MICHIGAN

GOVERNMENT'S EXHIBIT No. 8

Photo # 1

Description: Lock Bolts in Drilled Holes

Info: Photograph taken at Lockheed Aircraft Corp., Marietta, Ga., on 1/8/62 by SAS Robert E. Byrnes and John L. Boyle.

At File # 60-245.

See opposite ➡

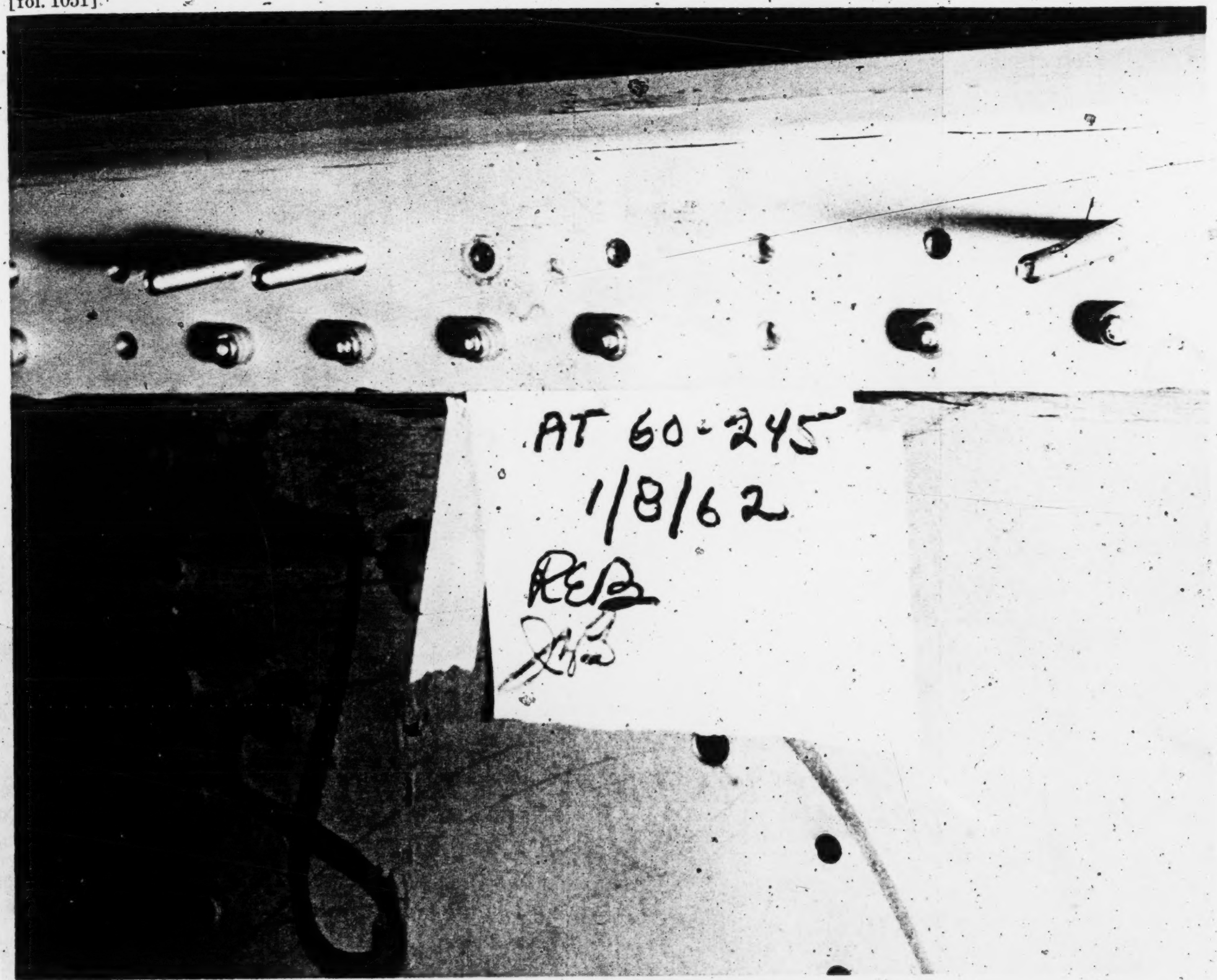
AT 60-245
1/8/62

[fol. 1052] IN THE UNITED STATES DISTRICT COURT FOR THE EASTERN DISTRICT OF MICHIGAN

GOVERNMENT'S EXHIBIT NO. 10

Photo # 3

Description: Bolts with Lockbolt Collars

Info: Photograph taken at Lockheed Aircraft Corp., Marietta, Ga., on 1/8/62 by SAS Robert E. Byrnes and John L. Boyle.

At File # 60-245.

See opposite ➡

[fol. 1053]

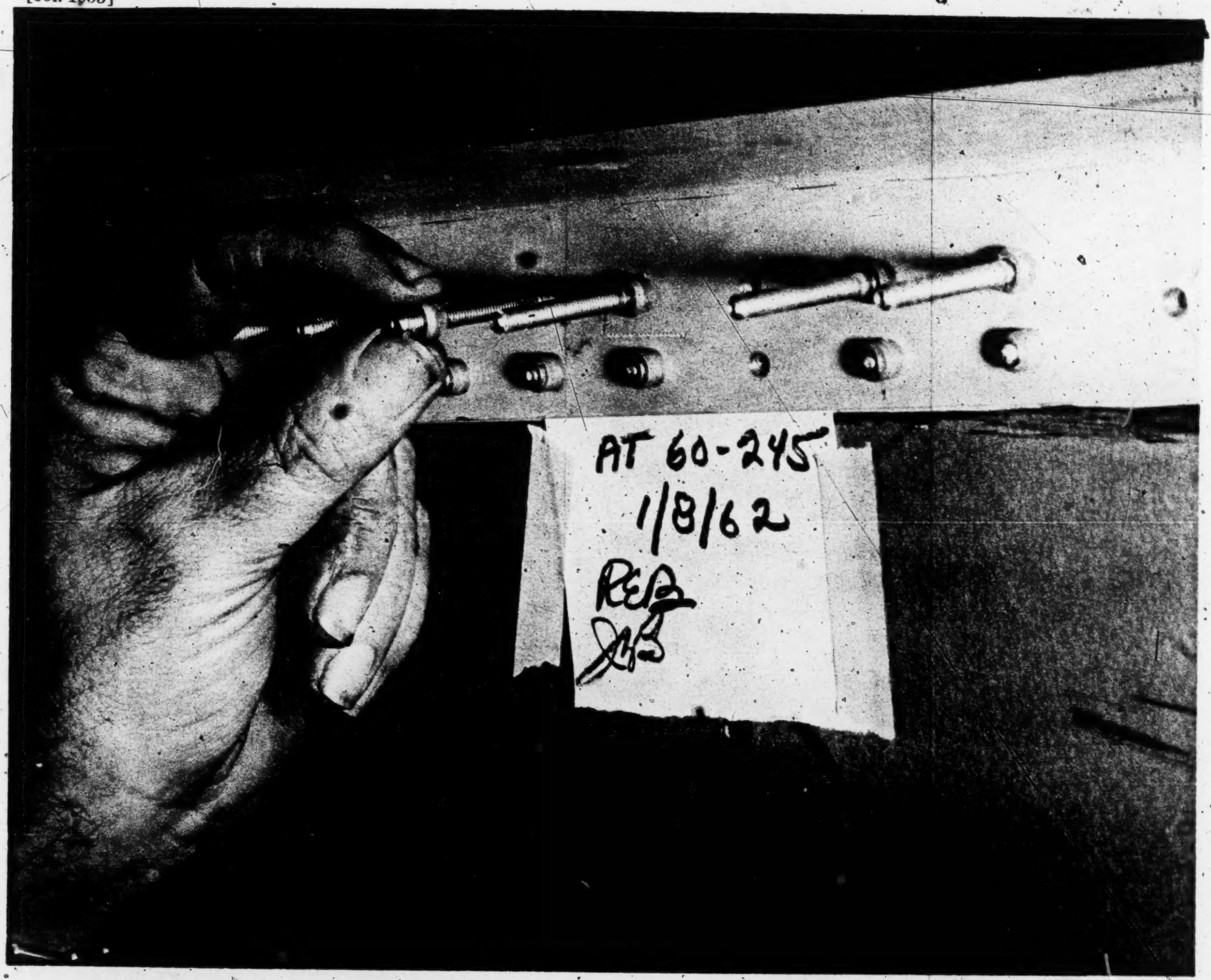

[fol. 1054] IN THE UNITED STATES DISTRICT COURT FOR THE EASTERN DISTRICT OF MICHIGAN

GOVERNMENT'S EXHIBIT No. 11

Photo #4

Description: Swadging Collars on Bolts

Info: Photograph taken at Lockheed Aircraft Corp., Marietta, Ga., on 1/8/62 by SAS Robert E. Byrnes and John L. Boyle.

At File # 60-245.

See opposite ➡

[fol. 1055]

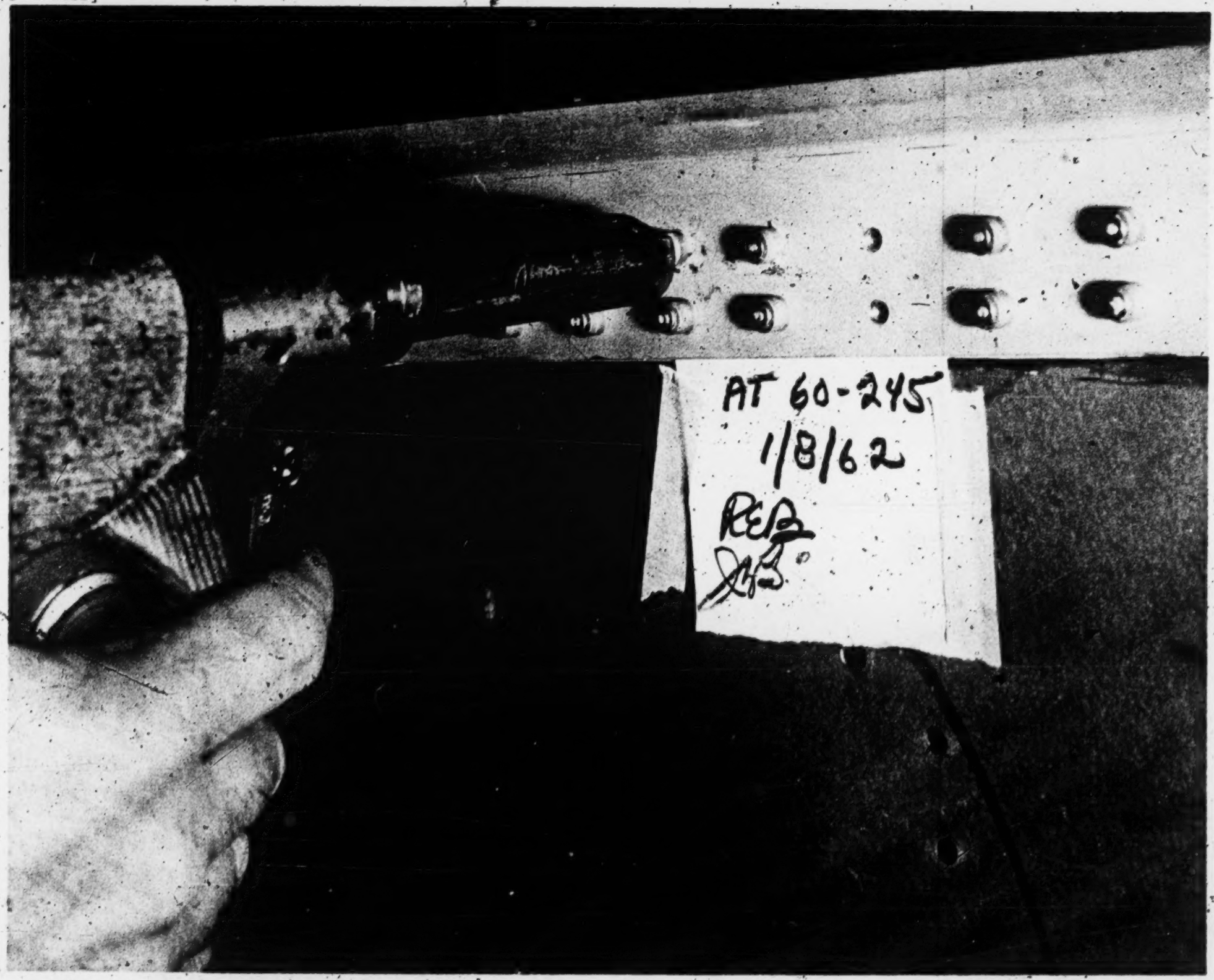

[fol. 1056] IN THE UNITED STATES DISTRICT COURT FOR THE EASTERN DISTRICT OF MICHIGAN

GOVERNMENT'S EXHIBIT No. 13

Photo # 6

Description: Installation of Lockbolts in Wing Section

Info: Photograph taken at Lockheed Aircraft Corp., Marietta, Ga.. on 1/8/62 by SAS Robert E. Byrnes and John L. Boyle.

At File # 60-245.

See opposite ➞

[fol. 1057]

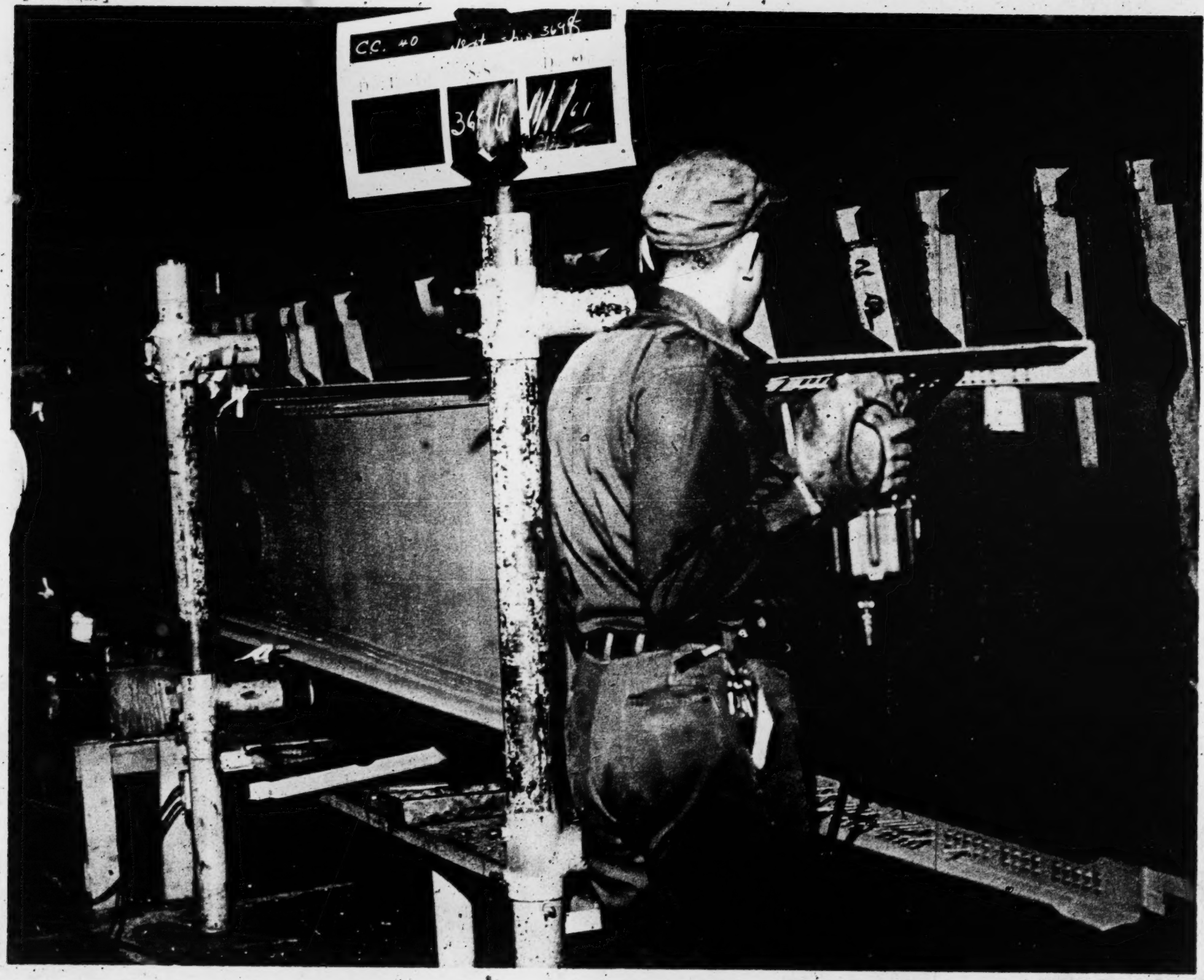

[fol. 1058] IN THE UNITED STATES DISTRICT COURT FOR THE EASTERN DISTRICT OF MICHIGAN

GOVERNMENT'S EXHIBIT No. 14

Photo # 7

Description: Rear Beam—Center Wing Section

Info: Photograph taken at Lockheed Aircraft Corp., Marietta, Ga., on 1/8/62 by SAS Robert E. Byrnes and John L. Boyle.

At File # 60-245.

See opposite ➡

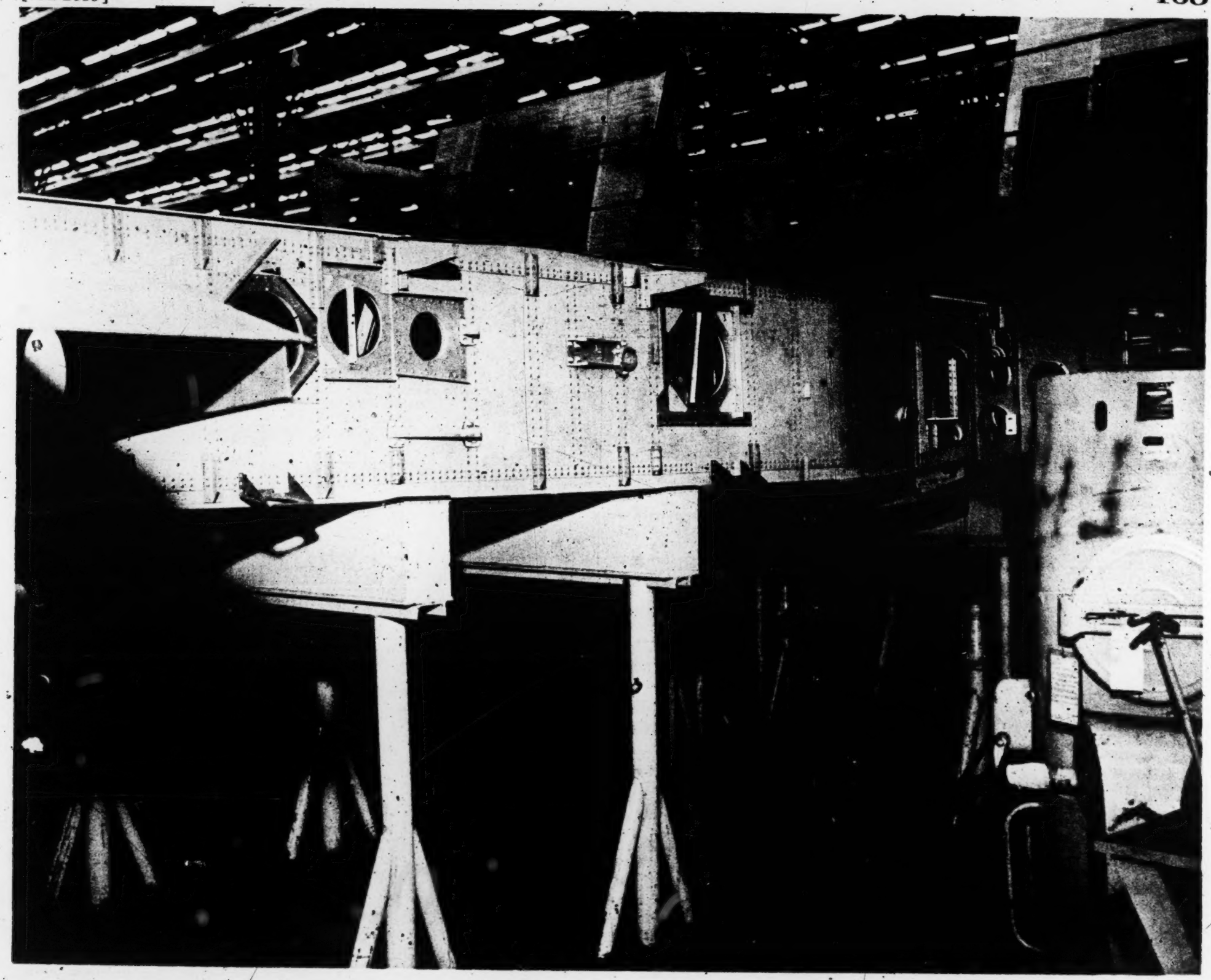

[fol. 1060] IN THE UNITED STATES DISTRICT COURT FOR THE EASTERN DISTRICT OF MICHIGAN

GOVERNMENT'S EXHIBIT No. 15

Photo # 8

Description: Center Wing Section—Front Beam Showing

Info: Photograph taken at Lockheed Aircraft Corp., Marietta, Ga., on 1/8/62 by SAS Robert E. Byrnes and John L. Boyle.

At File # 60-245.

See opposite ➡

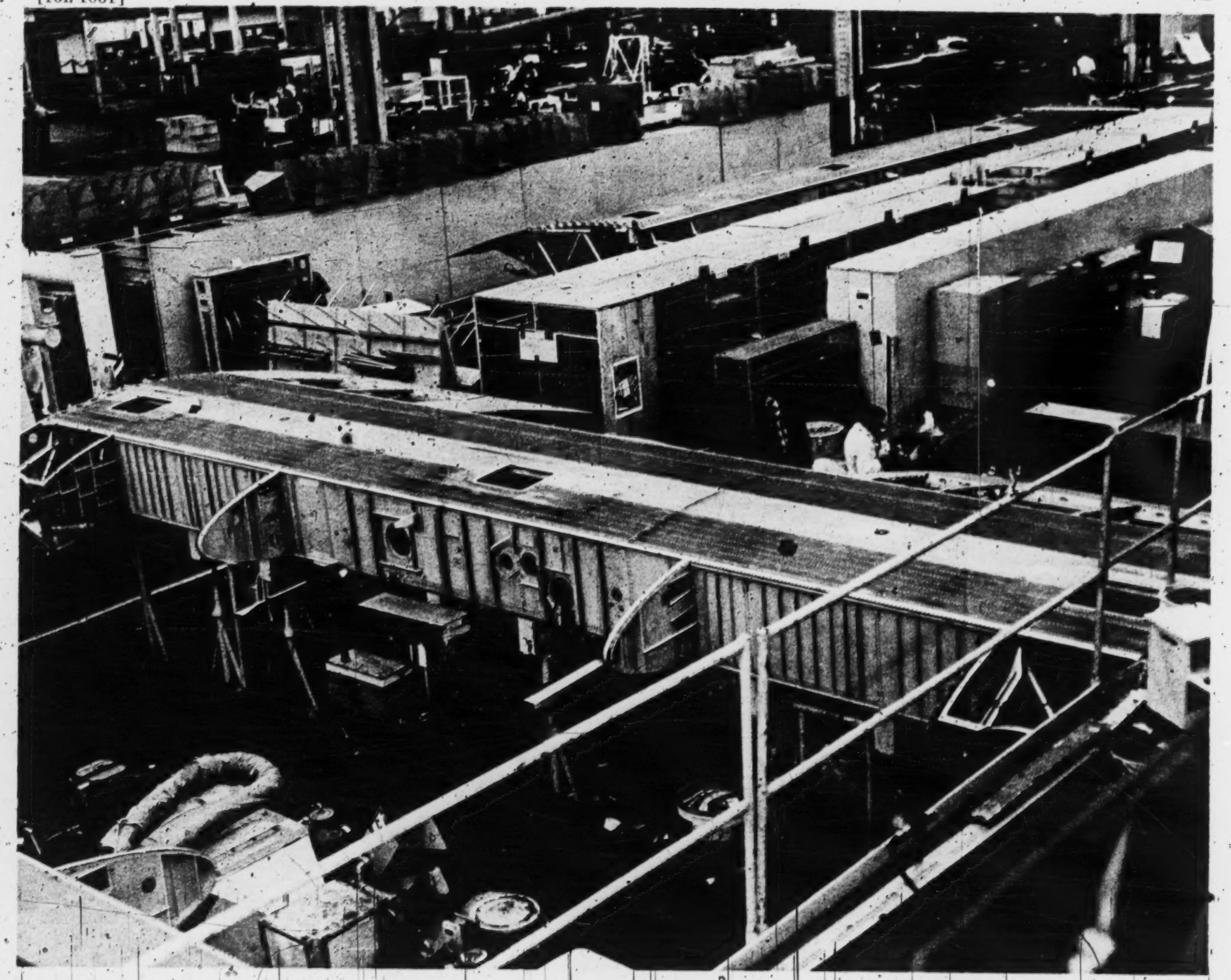

[fol. 1062] IN THE UNITED STATES DISTRICT COURT FOR THE EASTERN DISTRICT OF MICHIGAN

GOVERNMENT'S EXHIBIT No. 16

Photo # 9

Description: Center Wing Section

Info: Photograph taken at Lockheed Aircraft Corp., Marietta, Ga., on 1/8/62 by SAS Robert E. Byrnes and John L. Boyle.

At File # 60-245.

See opposite ➡

[fol. 1063]

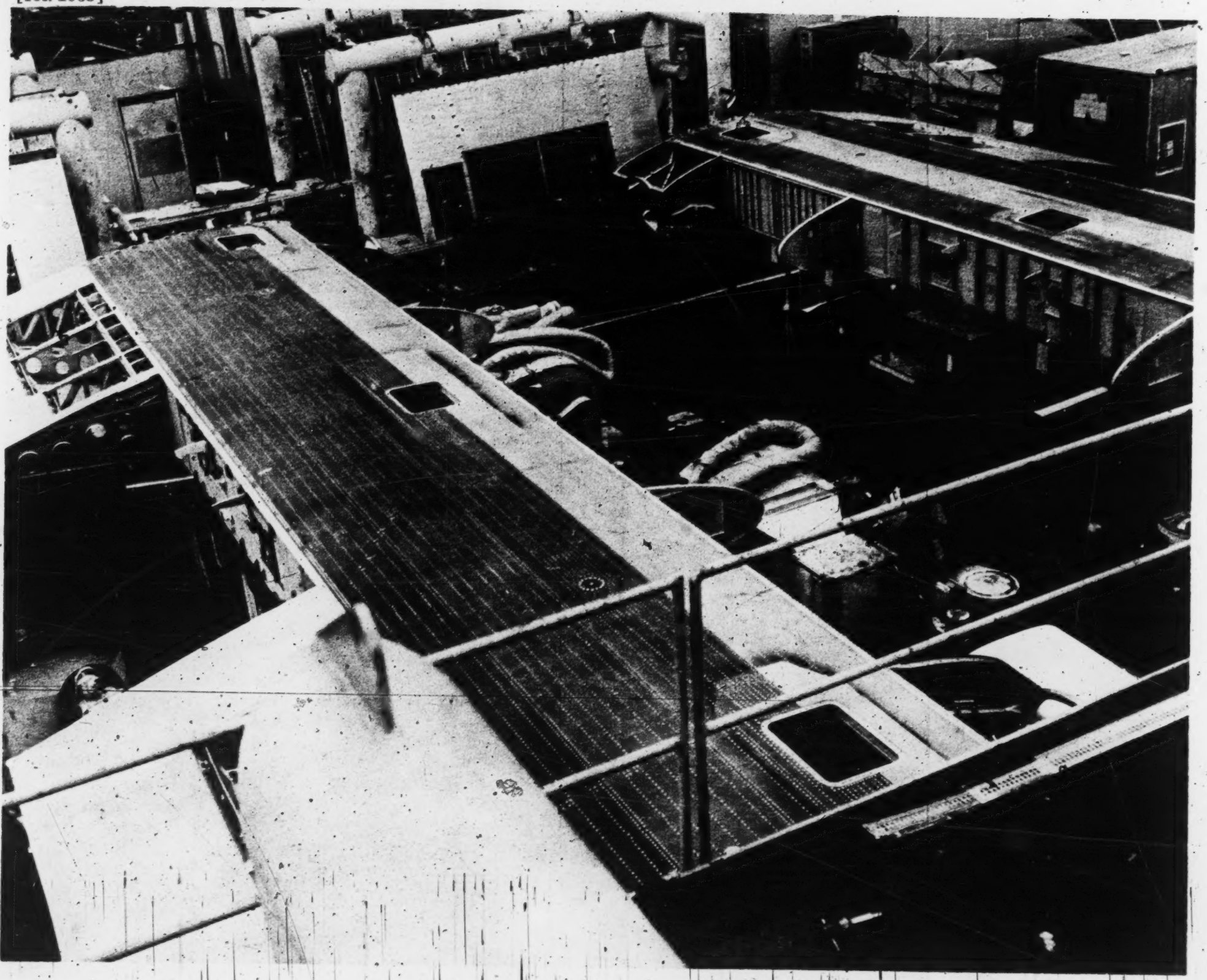

BLANK
PAGE

[fol. 1064] IN THE UNITED STATES DISTRICT COURT FOR THE EASTERN DISTRICT OF MICHIGAN

GOVERNMENT'S EXHIBIT No. 17

September 3, 1954

AGREEMENT

This agreement, made at Detroit, Michigan, this 14th day of September, 1954, between Huck Manufacturing Company, a corporation of Michigan, having its principal place of business at 2480 Bellevue Avenue, Detroit, Michigan (hereinafter referred to as "Huck"), and Townsend Company, a corporation of Pennsylvania, having its principal place of business at the Borough of Fallston, Beaver County, Pennsylvania (hereinafter referred to as "Townsend");

Witnesseth:

Whereas, Huck is the owner of the following United States Letters Patent and application for Letters Patent relating to lockbolt devices which are two-part fastening devices including a pin and collar, and in which the collar is swaged into locking grooves in the pin simultaneously with the setting of the fastener, such devices being hereinafter referred to as "lockbolt devices":

Patent No. 2,114,493, granted 4-19-38 for "Rivet and Rivet Setting." Patent No. 2,527,307, granted 10-24-50 for "Rivet and Method of Riveting" Patent No. 2,531,048, granted 11-21-50 for "Fastening Device" Patent No. 2,531,049, granted 11-21-50 for "Fastening Device" Application Serial No. 378,897, filed 9-8-53, for "Lockbolt Collar" Application Serial No. 427,719, filed May 5, 1954, for "Lockbolt Construction"

Whereas, Huck is engaged in the manufacture and sale of said lockbolt devices covered by said Letters Patent;

Whereas, Townsend has or will obtain the manufacturing and sales facilities for the manufacture and sale of said lockbolt devices; and

Whereas, Townsend desires a license to manufacture and sell such lockbolt devices and Huck is desirous of licensing

Townsend for the manufacture and sale of such lockbolt devices;

[fol. 1065] Now, Therefore, in consideration of the mutual covenants and agreements hereinafter contained, it is agreed by and between the parties hereto as follows:

1. Huck hereby grants to Townsend a nonexclusive right and license under the aforesaid United States Letters Patent and application for Letters Patent, including Letters Patent and applications for Letters Patent on improvements on said lockbolt devices and substitutes therefor of the same type of lockbolt devices, to manufacture, use and sell lockbolt devices covered by the claims in said Letters Patent and any Letters Patent that may issue on said application for Letters Patent, and to practice the methods claimed therein. This license also applies to devices covered by any renewals, continuations, divisions of, or substitutes for, said applications for Letters Patent, and also any reissues or extensions of any of said Letters Patent.

2. Townsend agrees to pay to Huck a royalty of five percent (5%) on the net selling price of all lockbolt devices manufactured and sold by Townsend which are covered by any claim of any of the Letters Patent licensed herein. By "net selling price" the parties hereto mean the net selling price of lockbolt devices charged by Townsend, less all discounts allowed and taken.

3. Townsend shall keep proper books of account showing sales of lockbolt devices subject to royalty under this agreement, and agrees to report to Huck by the twentieth of each month the lockbolt devices sold by it during the preceding month, giving in such report the dollar amount sold [fol. 1066] during the month being reported. Lockbolt devices shall be considered sold when billed out or, if not billed out, when delivered or paid for before delivery. In computing sales of lockbolt devices, credit shall be given for returned lockbolt devices, and lockbolt devices which are given out as samples without charge to the customer shall not be subject to royalty.

4. Within twenty (20) days following the last day of February, May, August and November, Townsend will submit a written statement giving the total sales of lockbolt devices subject to royalty under this agreement for the

quarter being reported, and accompany such quarterly report with payment of the royalty then due.

5. Huck shall have access to the books and records of Townsend at all reasonable times to check the amount of sales of lockbolt devices made hereunder by Townsend from time to time, provided, however, that Townsend may, at its election, substitute for its examination a certificate of a mutually agreed upon firm of certified public accountants as to the amount of said sales and as to any other figures that will determine the amount of royalties payable thereon. Huck will not require an examination or such certified statement more often than once a year.

6. In the event that Townsend fails to comply with the terms of reports and royalty payment specified herein, and so often as the same shall happen, or breaches any other material provisions of this agreement, Huck may, at its option, by giving sixty (60) days' notice in writing, specifying the breach complained of, terminate this agreement and [fol. 1067] the license granted hereby, provided, however, that if the breach complained of shall be corrected by Townsend within thirty (30) days after the mailing of said notice, then this agreement shall remain in full force and effect.

7. It is agreed that, for the first year of this agreement, no minimum royalties are required. However, beginning with the second year of this agreement, computed from the anniversary date hereof, in the event that Townsend has not paid to Huck an amount of Fifteen Thousand Dollars ($15,000) for the second year and Twenty-Five Thousand Dollars ($25,000) for each succeeding year thereafter in earned or unearned royalties, then Huck may, at its option, terminate this license by notice as provided in Paragraph 6.

8. Townsend hereby grants to Huck a nonexclusive, royalty-free license, with the right to sublicense on any improvements on said lockbolt devices made or acquired by Townsend during the life of this agreement coming within the claims of the licensed patent, or lockbolt devices of the same type which are substitutes for the lockbolt devices licensed herein by Huck.

9. Townsend agrees to use its best efforts to provide the required facilities and to manufacture and sell said lockbolt devices in sizes up to at least 9/16 inch pin diameter.

10. For lockbolt devices sold by Townsend as Huck equals with pin diameter up to 3/8 inch, Townsend agrees to maintain Huck's quality for full equivalence in shear, tension and fatigue, for aircraft shear and tension allowables as defined or as may be defined by ANC5 Manual and for commercial lockbolt devices typical strength properties defined in Huck-published commercial lockbolt engineering bulletins, which Huck agrees to supply to Townsend.

[fol. 1068] 11. Townsend agrees to suitably identify the lockbolt devices as manufactured and sold by it to distinguish from the lockbolt devices manufactured and sold by Huck, the manner of so distinguishing the lockbolt devices to be mutually determined hereinafter.

12. Recognizing that Huck has a considerable investment in facilities for the manufacture and sale of the licensed products and has, over the past year, spent considerable monies in the development and promotion of said products and, further recognizing that Townsend will be required to expend a considerable amount of money to provide the facilities required for its entering into the manufacture and sale of the lockbolt devices herein licensed:

a. Huck agrees that, for the first two years of the present license, the license herein granted to Townsend shall be exclusive to Huck and Townsend for the lockbolt devices offered for sale by Huck, unless during that period of two years a national emergency shall require the production of lockbolt devices for United States Governmental use which cannot be satisfied by the combined facilities of Huck and Townsend; then Huck may grant a license to another source in the event that it is requested so to do by a United States Government agency.

b. Townsend agrees during said two-year period to maintain at least Huck's prices on lockbolt devices manufactured and sold by Huck according to Huck's published current price schedules as changed from [fol. 1069] time to time and computed according to Huck's published Standard Pricing Policy, which will be furnished Townsend by Huck, except that Townsend's prices shall be computed F.O.B. Townsend, New Brighton, Pennsylvania.

13. Townsend may cancel this agreement at any time upon six (6) months' previous notice in writing to Huck. In the event of termination by Townsend or Huck as provided in this agreement, Townsend may dispose of its inventory on hand or in process, subject to the royalty provisions of paragraph 2.

14. Notice as herein provided shall mean the placing of the notice in the mails, registered-return, postage prepaid, to the party being notified at the address above given, or at such other address designated by the parties hereto.

15. The license herein granted is nontransferable without the written consent of Huck first had and obtained, except to the successors of the entire fastener business of Townsend, and this agreement shall be binding upon, and inure to the benefit of, any such transferee of Townsend and the successors and assigns of Huck.

16. Unless previously terminated in accordance with the terms hereof, this agreement and the license herein granted shall extend for the full term of the United States Letters Patent which are or may be included in this agreement, and shall terminate at the expiration of the last to expire of said patents.

17. Huck agrees to furnish Townsend such drawings and product specifications as it may have for the lockbolt devices licensed herein, and for lockbolt devices having pin sizes up to and including 3/8 inch diameter, it being understood [fol. 1070] that Huck does not have such specifications for lockbolt devices of larger pin diameter. Huck agrees to furnish Townsend with reasonable aid, but at no expense to Huck, in its know-how required for the production of the licensed lockbolt devices, and Townsend likewise agrees to provide Huck with reasonable aid, but at no expense to Townsend, in know-how that it may develop with respect to the production of the licensed lockbolt devices.

18. The license granted to Townsend in paragraph 1 hereof shall commence at the date of this agreement with respect to all lockbolt devices, except those manufactured for sale for use in aircraft, and such license for use in aircraft shall not begin for nine (9) months from the date hereof.

19. Townsend agrees to properly affix the necessary statutory patent notices to all of the containers within which

the lockbolt devices herein licensed are shipped and to include in all Townsend advertisements and standard drawings relating thereto similar notices; such notices to include the legend "Licensed under the following Huck Patents:", to be followed by a list of the aforesaid patents and other patents as they issue and become a part of this license.

20. The pendency of litigation on any patents that are or may be included in this agreement shall in no wise affect this agreement, but in the event that any claim or claims of such patents shall be held invalid by a court of last resort or by a lower court from which no appeal or petition for writ of certiorari has been taken within the time permitted [fol. 1071] therefor, then Townsend, after five (5) years from such event or from the expiration of the time for appeal or writ of certiorari from said lower court, and no appeal or writ having been taken, shall thereafter be relieved from any and all obligations to pay royalties for or on account of any fastening devices which are covered only by the claim or claims so held to be invalid.

21. In the event that Huck decides to license the manufacture, use and sale of the products licensed herein in Canada, Huck agrees to notify Townsend first of such decision and give Townsend the first opportunity to negotiate for such license.

22. All provisions hereto are material to the contract and any breaches thereof shall be considered as material breaches.

Signed at Detroit in the County of Wayne and State of Michigan this 14 day of September 1954.

Huck Manufacturing Company, By A. W. Armour III Its President.

Attest: Alfred E. Benkert, Its Executive Vice President.

Signed at New Brighton in the County of Beaver and State of Pennsylvania this 10th day of September, 1954.

Townsend Company, By A. R. Dickenson, Its President.

Attest: H. E. Young, Its Ass't Secretary.

[fol. 1072] IN THE UNITED STATES DISTRICT COURT FOR THE EASTERN DISTRICT OF MICHIGAN

Government Exhibit No. 18

Criminal Action No. 39017

UNITED STATES OF AMERICA,

v.

HUCK MANUFACTURING COMPANY, TOWNSEND COMPANY, A. WATSON ARMOUR, III, FRED R. DICKENSON

STIPULATION OF TESTIMONY BY H. E. YOUNG

It is hereby stipulated by all parties to this action by their attorneys as follows:

If called to testify in this criminal action, Mr. H. E. Young, an employee of defendant Townsend Company, would state under oath—

(1) that the signature of H. E. Young appearing on page 8 of document bearing the title "Agreement" and identified by the symbol J-606 and bearing the dates September 14, 1954 and September 10, 1954 on the final page of that 8-page document is his signature as Assistant Secretary of Townsend Company bearing witness to the genuineness and authenticity of the signature made by F. R. Dickenson in his presence, which also appears on that page.

s/Charles R. Esherick, s/Jack L. Lipson, Attorneys, Department of Justice, Date: February 26, 1963. s/James E. Haggerty, s/Arthur W. Dickey, Attorneys, Huck Manufacturing Company and A. Watson Armour, III. Date:— s/Thomas Pomeroy, Jr., s/Samuel McCune, Attorneys, Townsend Company and Fred R. Dickenson. Date: February 26, 1963.

[fol. 1073] IN THE UNITED STATES DISTRICT COURT FOR THE EASTERN DISTRICT OF MICHIGAN

GOVERNMENT'S EXHIBIT No. 19

October 18, 1955

AGREEMENT

This Agreement, made at Detroit, Michigan, this 1st day of November, 1955, between Huck Manufacturing Company, a corporation of Michigan, having its principal place of business at 2480 Bellevue Avenue, Detroit, Michigan (hereinafter referred to as "Huck"), and Townsend Company, a corporation of Pennsylvania, having its principal place of business at the Borough of Fallston, Beaver County, Pennsylvania(hereinafter referred to as "Townsend");

WITNESSETH:

Whereas, Huck is engaged in the manufacture and sale of certain fastening devices (such devices being known and defined as Huck lockbolt stumps, Huck lockbolt stump collars, Huck lockbolt shear stumps and Huck lockbolt shear collars) disclosed and identified by way of examples and not by way of limitation as Exhibits A, B, C, D and E attached hereto, which shall hereinafter be referred to as "licensed products", and is in possession of certain valuable information, called "know-how", relating to the manufacture and use of said licensed products, and expects in the future to come into possession of further such information;

Whereas, Huck is the owner of application for United States Letters Patent of Roy C. Scheuring, Serial No. 378,897, filed September 8, 1953, for Lockbolt Collar; and [fol. 1074] Whereas, Townsend desires a license to manufacture and sell such licensed products and obtain from Huck its "know-how" relating to the manufacture and use of such licensed products, and Huck is desirous of licensing Townsend for the manufacture and sale of such licensed products; and

NOTE: Sept date typewritten at top of page.
Sept. 14 written in on page 1.

Whereas, Huck and Townsend have entered into another agreement dated September 3, 1954, relating to lockbolts (hereinafter referred to as "Lockbolt License");

Now, therefore, in consideration of the mutual covenants and agreements hereinafter contained, it is agreed by and between the parties as follows:

1. Huck hereby grants to Townsend a non-exclusive right and license under the aforesaid application for United States Letters Patent and under any Letters Patent issuing thereon, including Letters Patent and applications for Letters Patent on improvements on said licensed products and substitutes therefor of the same type of licensed products, to manufacture, use and sell licensed products covered by the claim in any Letters Patent that may issue on said application for Letters Patent, including any renewals, continuations, divisions, substitutes, reissues or extensions thereof.

2. Huck shall, so soon after the date of this agreement as Townsend may reasonably require, supply to Townsend, but at no expense to Huck, specifications, working and other drawings and other information that may be reasonably necessary to enable Townsend to manufacture said licensed products.

[fol. 1075] 3. Huck and Townsend agree to exchange information with respect to improvements that each may make in the licensed products, and with respect to improved techniques in the manufacture and use of said licensed products.

4. All information supplied Townsend by or on behalf of Huck under or pursuant to this agreement shall be treated as confidential by Townsend, and shall be used solely to enable Townsend to manufacture and sell licensed products in accordance with this agreement and during the continuance thereof.

5. Townsend shall insure that no such information as aforesaid is disclosed except to responsible employees of itself without the express prior consent of Huck.

6. As consideration for the information supplied and to be supplied, and for the assistance given and to be given by Huck, and for the license granted and to be granted under the aforesaid application for Letters Patent and under any Letters Patent obtained by Huck in respect of improvements, Townsend agrees to pay to Huck a royalty of Five Percent (5%) on the net selling price of all licensed products manufactured and sold.

Royalty (payment on page 4).

by Townsend, either covered by the Letters Patent licensed herein or in respect of such licensed products in whose design or manufacture substantial use is made of any designs or information supplied by or on behalf of Huck hereunder. By "net selling price" the parties hereto mean the net selling price of licensed products charged by Townsend, less all discount allowed and taken.

[fol. 1076] 7. Townsend shall keep proper books of account showing sales of licensed products subject to royalty under this agreement, and agrees to report to Huck by the twentieth of each month the licensed products sold by it during the preceding month, giving in such report the dollar amount sold during the month being reported. Licensed products shall be considered sold when billed out or, if not billed out, when delivered or paid for before delivery. In computing sales of licensed products, credit shall be given for returned licensed products, and licensed products which are given out as samples without charge to the customer shall not be subject to royalty.

8. Within twenty (20) days following the last day of February, May, August and November, Townsend will submit a written statement giving the total sales of licensed products subject to royalty under this agreement for the quarter being reported, and accompany such quarterly report with payment of the royalty then due.

Payment of royalty.

9. Huck shall have access to the books and records of Townsend at all reasonable times to check the amount of sales of licensed products made hereunder by Townsend from time to time, provided, however, that Townsend may, at its election, substitute for its examination a certificate of a mutually agreed upon firm of certified public accountants as to the amount of said sales and as to any other figures that will determine the amount of royalties payable thereon. Huck will not require an examination or such certified statement more often than once a year.

[fol. 1077] 10. In the event that Townsend fails to comply with the terms of reports and royalty payment specified herein, and so often as the same shall happen, or breaches any other material provisions of this agreement, Huck may, at its option, by giving sixty (60) days' notice in writing, specifying the breach complained of, terminate this agreement and the license granted hereby, provided, however,

that if the breach complained of shall be corrected by Townsend within thirty (30) days after the mailing of said notice, then this agreement shall remain in full force and effect.

11. Townsend hereby grants to Huck a nonexclusive, royalty-free license, with the right to sublicense on any improvements on said licensed products made or acquired by Townsend during the life of this agreement coming within the claims of the licensed patent, or products of the same type which are substitutes for the licensed products licensed herein by Huck.

12. For licensed products sold by Townsend as Huck equals, Townsend agrees to maintain Huck's quality for full equivalence in shear, tension and fatigue, for aircraft shear and tension allowables as defined or as may be defined by ANC5 Manual and for commercial licensed products typical strength properties defined in Huck-published commercial lockbolt engineering bulletins, which Huck agrees to supply to Townsend.

13. Townsend agrees to suitably identify the licensed products as manufactured and sold by it to distinguish from the licensed products manufactured and sold by Huck, the manner of so distinguishing the licensed products to be mutually determined hereinafter.

[fol. 1078] 14. Notice as herein provided shall mean the placing of the written notice in the mails, registered-return, postage prepaid, to the party being notified at the address above given, or at such other address designated by the parties hereto, or by otherwise delivering to the other party such notice.

15. The license herein granted is nontransferable without the written consent of Huck first had and obtained, except to the successors of the entire fastener business of Townsend, and this agreement shall be binding upon, and inure to the benefit of, any such transferee of Townsend and the successors and assigns of Huck.

Term of Agreement

16. Unless previously terminated in accordance with the terms hereof, this agreement and the license herein granted shall extend for the full term of said Lockbolt License and shall terminate upon termination of said Lockbolt License.

17. Townsend agrees to properly affix the necessary statutory patent notices to all of the containers within

which the licensed products herein licensed are shipped and to include in all Townsend advertisements and standard drawings relating thereto similar notices; such notices to include the legend "Licensed under the following Huck Patents:", to be followed by a list of any patents as they issue and become a part of this license.

18. The pendency of litigation on any patents that may be included in this agreement shall in no wise affect this agreement, but in the event that any claim or claims of such patents shall be held invalid by a court of last resort or by a lower court from which no appeal or petition for writ of certiorari has been taken within the time permitted therefor, then Townsend, after five (5) years from such [fol. 1079] event or from the expiration of the time for appeal or writ of certiorari from said lower court, and no appeal or writ having been taken, shall thereafter be relieved from any and all obligations to pay royalties for or on account of any fastening devices which are covered only by the claim or claims so held to be invalid.

19. In the event that Huck decides to license the manufacture, use and sale of the licensed products in Canada, Huck agrees to notify Townsend first of such decision and give Townsend the first opportunity to negotiate for such license.

Signed at Detroit in the County of Wayne and State of Michigan this 1st day of November 1955.

Huck Manufacturing Company, By A. W. Armour III, Its President.

[SEAL] Attest: Louis B. Fielder, Its Asst. Secretary.

Signed at Fallston in the County of Beaver and State of Penna this 26 day of October, 1955.

Townsend Company, By F. R. Dickenson Its —.

[SEAL] Attest: D. C. Fabiani, Its Secretary.

Huck MANUFACTURING COMPANY

G DIAMETER PERMISSIBLE FOR K LENGTH UNDER HEAD.

ALLOWABLE SEAM DEPTH, HEAD CONCENTRICITY AND HEAD DISCONTINUITIES PER SPECIFICATION MIL-S-7839

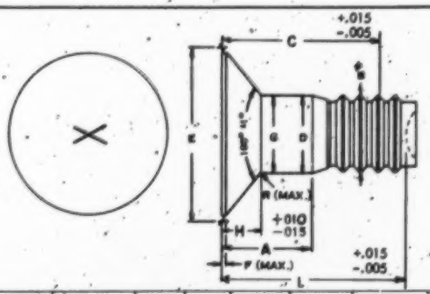

DIA.	B	D	E	MAX. T	G	H-Ref.	K	L(Alum) SEE NOTE 3	L(Steel) SEE NOTE 3	MAX. R
3/16"	.175/.1845	.187/.190	.371/.385	.018	.193	.080	3/64"	.261	.248	.015
1/4"	.231/.2415	.246/.249	.491/.507	.018	.252	.106	1/16"	.331	.331	.020
5/16"	.293/.3045	.309/.312	.617/.635	.020	.316	.133	5/64"	.414	.414	.025
3/8"	.354/.3675	.371/.374	.742/.762	.023	.378	.159	3/32"	.510	.510	.030

. INACTIVE FOR NEW DESIGN
Superceded by ASCT509

3/16" DIA.					1/4" DIA.					5/16" DIA.					3/8" DIA.				
PART NO.	Grip Range MIN.	Grip Range MAX.	A	C SEE NOTE (2)	PART NO.	Grip Range MIN.	Grip Range MAX.	A	C	PART NO.	Grip Range MIN.	Grip Range MAX.	A	C	PART NO.	Grip Range MIN.	Grip Range MAX.	A	C
★					★					★					★				
ALS509-T6- 2	.094	.156	.125	.305	ALS509-T8- 2	.094	.156	.125	.366	ALS509-T10- 3	.156	.219	.187	.489	ALS509-T12- 3	.156	.219	.187	.556
ALS509-T6- 3	.156	.219	.187	.367	ALS509-T8- 3	.156	.219	.187	.428	ALS509-T10- 4	.219	.281	.250	.551	ALS509-T12- 4	.219	.281	.250	.619
ALS509-T6- 4	.219	.281	.250	.430	ALS509-T8- 4	.219	.281	.250	.491	ALS509-T10- 5	.281	.344	.312	.614	ALS509-T12- 5	.281	.344	.312	.681
ALS509-T6- 5	.281	.344	.312	.492	ALS509-T8- 5	.281	.344	.312	.553	ALS509-T10- 6	.344	.406	.375	.676	ALS509-T12- 6	.344	.406	.375	.744
ALS509-T6- 6	.344	.406	.375	.555	ALS509-T8- 6	.344	.406	.375	.616	ALS509-T10- 7	.406	.469	.437	.739	ALS509-T12- 7	.406	.469	.437	.806
ALS509-T6- 7	.406	.469	.437	.617	ALS509-T8- 7	.406	.469	.437	.678	ALS509-T10- 8	.469	.531	.500	.801	ALS509-T12- 8	.469	.531	.500	.869
ALS509-T6- 8	.469	.531	.500	.680	ALS509-T8- 8	.469	.531	.500	.741	ALS509-T10- 9	.531	.594	.562	.864	ALS509-T12- 9	.531	.594	.562	.931
ALS509-T6- 9	.531	.594	.562	.742	ALS509-T8- 9	.531	.594	.562	.803	ALS509-T10-10	.594	.656	.625	.926	ALS509-T12-10	.594	.656	.625	.994
ALS509-T6-10	.594	.656	.625	.805	ALS509-T8-10	.594	.656	.625	.866	ALS509-T10-11	.656	.718	.687	.989	ALS509-T12-11	.656	.718	.687	1.056
ALS509-T6-11	.656	.718	.687	.867	ALS509-T8-11	.656	.718	.687	.928	ALS509-T10-12	.718	.781	.750	1.051	ALS509-T12-12	.718	.781	.750	1.119
ALS509-T6-12	.718	.781	.750	.930	ALS509-T8-12	.718	.781	.750	.991	ALS509-T10-13	.781	.843	.812	1.114	ALS509-T12-13	.781	.843	.812	1.181
ALS509-T6-13	.781	.843	.812	.992	ALS509-T8-13	.781	.843	.812	1.053	ALS509-T10-14	.843	.906	.875	1.176	ALS509-T12-14	.843	.906	.875	1.244
ALS509-T6-14	.843	.906	.875	1.055	ALS509-T8-14	.843	.906	.875	1.116	ALS509-T10-15	.906	.968	.937	1.239	ALS509-T12-15	.906	.968	.937	1.306
ALS509-T6-15	.906	.968	.937	1.117	ALS509-T8-15	.906	.968	.937	1.178	ALS509-T10-16	.968	1.031	1.000	1.301	ALS509-T12-16	.968	1.031	1.000	1.369
ALS509-T6-16	.968	1.031	1.000	1.180	ALS509-T8-16	.968	1.031	1.000	1.241	ALS509-T10-17	1.031	1.094	1.062	1.364	ALS509-T12-17	1.031	1.094	1.062	1.431
ALS509-T6-17	1.031	1.094	1.062	1.242	ALS509-T8-17	1.031	1.094	1.062	1.303	ALS509-T10-18	1.094	1.156	1.125	1.426	ALS509-T12-18	1.094	1.156	1.125	1.494
ALS509-T6-18	1.094	1.156	1.125	1.305	ALS509-T8-18	1.094	1.156	1.125	1.366	ALS509-T10-19	1.156	1.219	1.187	1.489	ALS509-T12-19	1.156	1.219	1.187	1.556
ALS509-T6-19	1.156	1.219	1.187	1.367	ALS509-T8-19	1.156	1.219	1.187	1.428	ALS509-T10-20	1.219	1.281	1.260	1.551	ALS509-T12-20	1.219	1.281	1.260	1.619
ALS509-T6-20	1.219	1.281	1.260	1.430	ALS509-T8-20	1.219	1.281	1.260	1.491	ALS509-T10-21	1.281	1.343	1.312	1.614	ALS509-T12-21	1.281	1.343	1.312	1.681
ALS509-T6-21	1.281	1.343	1.312	1.492	ALS509-T8-21	1.281	1.343	1.312	1.553	ALS509-T10-22	1.343	1.406	1.375	1.676	ALS509-T12-22	1.343	1.406	1.375	1.744
ALS509-T6-22	1.343	1.406	1.375	1.555	ALS509-T8-22	1.343	1.406	1.375	1.616	ALS509-T10-23	1.406	1.469	1.437	1.739	ALS509-T12-23	1.406	1.469	1.437	1.806
ALS509-T6-23	1.406	1.469	1.437	1.617	ALS509-T8-23	1.406	1.469	1.437	1.678	ALS509-T10-24	1.469	1.531	1.500	1.801	ALS509-T12-24	1.469	1.531	1.500	1.869
ALS509-T6-24	1.469	1.531	1.500	1.680	ALS509-T8-24	1.469	1.531	1.500	1.741	ALS509-T10-25	1.531	1.594	1.562	1.864	ALS509-T12-25	1.531	1.594	1.562	1.931
ALS509-T6-25	1.531	1.594	1.562	1.742	ALS509-T8-25	1.531	1.594	1.562	1.803	ALS509-T10-26	1.594	1.656	1.625	1.926	ALS509-T12-26	1.594	1.656	1.625	1.994
ALS509-T6-26	1.594	1.656	1.625	1.805	ALS509-T8-26	1.594	1.656	1.625	1.866	ALS509-T10-27	1.656	1.718	1.687	1.989	ALS509-T12-27	1.656	1.718	1.687	2.056
ALS509-T6-27	1.656	1.718	1.687	1.867	ALS509-T8-27	1.656	1.718	1.687	1.928	ALS509-T10-28	1.718	1.781	1.750	2.051	ALS509-T12-28	1.718	1.781	1.750	2.119
ALS509-T6-28	1.718	1.781	1.750	1.930	ALS509-T8-28	1.718	1.781	1.750	1.991	ALS509-T10-29	1.781	1.843	1.812	2.114	ALS509-T12-29	1.781	1.843	1.812	2.181
ALS509-T6-29	1.781	1.843	1.812	1.992	ALS509-T8-29	1.781	1.843	1.812	2.053	ALS509-T10-30	1.843	1.906	1.875	2.176	ALS509-T12-30	1.843	1.906	1.875	2.244
ALS509-T6-30	1.843	1.906	1.875	2.055	ALS509-T8-30	1.843	1.906	1.875	2.116	ALS509-T10-31	1.906	1.968	1.937	2.239	ALS509-T12-31	1.906	1.968	1.937	2.306
										ALS509-T10-32	1.968	2.031	2.000	2.301	ALS509-T12-32	1.968	2.031	2.000	2.369
										ALS509-T10-33	2.031	2.094	2.062	2.364	ALS509-T12-33	2.031	2.094	2.062	2.431

★"T"=Alloy Steel. Substitute "E" for 75S-T6 Aluminum Alloy Stump Material. (New Aluminum Designation: 7075-T6)

PART NUMBER EXPLANATION:

ALS509-T6-1 (T) Designates heat treated alloy steel per specification AN-S-9 (AISI-4037)

HEAT TREATMENT - Carbon recovery - quench and draw - Huck Specification 101.

FINISH - Cadmium Plate - QQ-P-416 Type I, Class C.

IDENTIFICATION - Raised or depressed X on top of head.

ALS509-E6-1 (E) Designates 75S-T6 Aluminum Alloy - QQ-A-282 (New Alum. Desig; 7075-T6).

HEAT TREATMENT - MIL-H-6088 (60 Min. at 910° - 925°F; quench in cold water, age 3 hrs. at 250°F & 3 hrs. at 325°F.)

FINISH - Anodize per AN-QQ-A-696 or chemical surface treatment per MIL-C-5541.

IDENTIFICATION - 3 raised dots © on top of head.

COLLARS: Recommended Collar Part Numbers:

Stump	Collar		Stump	Collar
ALS509-T6	LC-C6		ALS509-T12	LC-C12
ALS509-T8	LC-C8		ALS509-E6	LC-F6
ALS509-T6	LC-R6	High	ALS509-E8	LC-F8
ALS509-T8	LC-R8	Temp.	ALS509-E10	LC-F10
ALS509-T10	LC-C10		ALS509-E12	LC-F12

STRENGTH: See ANC-5 Manual for allowables.

Longer grips than shown are available special.

TOOLS: Huckbolt Stumps are installed with standard air hammers or squeezers. Recommended hammer size tabulated below:

Stump	Hammer **	Stump	Hammer
ALS509-T6	CP5X★★	ALS509-E6	CP3X★★
ALS509-T8	CP7X★★	ALS509-E8	CP5X★★
ALS509-T10	IR36C★★	ALS509-E10	CP7X★★
ALS509-T12	IR36C★★	ALS509-E12	IR36C★★

★★- or equivalent size tool.

Write to Huck Mfg. Co. for Swaging Set sources

HOLE PREPARATION:

DIA.	For Interference Fit Pre-Drill	Size Drill	Limits	For Clearance Fit Drill	Limits
3/16"	#18 (.1695)	#13 (.185)	.185/.188	#11 (.191)	.191/.201
1/4"	#1 (.228)	6.2mm (.2441)	.244/.247	1/4"	.250/.260
5/16"	"L" (.290)	7.8mm (.3071)	.307/.310	5/16"	.3125/.322
3/8"	11/32 (.343)	"U" (.368)	.369/.372	3/8"	.375/.385

NOTES:
(1) To install Huckbolt Stumps Hole Filling, prepare holes per above chart and drive the stump into the hole with an air hammer. The collar may then be driven.
(2) "C" dimension for 3/16" alum is as shown + .013.
(3) Dimension L is dimension A plus values shown under 'L' for grips and diametefs listed.

Huck MANUFACTURING CO.
2480 BELLEVUE AVENUE
DETROIT 7, MICHIGAN

AIRCRAFT HUCKBOLT* STUMP
AN-509 SCREW HEAD TYPE
*THE ORIGINAL LOCKBOLT

ALS509

FORM 9-182 11-15-54. PRINTED IN U.S.A.

Huck MANUFACTURING COMPANY

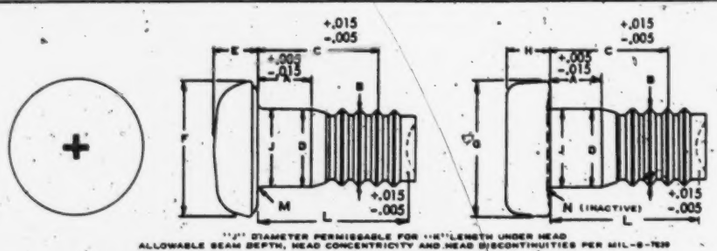

"J" DIAMETER PERMISSABLE FOR "L" LENGTH UNDER HEAD ALLOWABLE SEAM DEPTH, HEAD CONCENTRICITY AND HEAD DISCONTINUITIES PER MIL-S-7520

NOTE: Inactive type Flat Head will be supplied until stock is exhausted.

DIA.	B	D	E STEEL	E ALUM.	F	G	H STEEL	H ALUM.	J	K	L (Alum) SEE NOTE (3)	L (Steel) SEE NOTE (3)	M	N
3/16"	.175/.1845	.187/.190	.078/.088	.078/.088	.302/.317	.302/.316	.076/.086	.076/.086	.193	3/64	.261	.248	.010/.025	.007/.012
1/4"	.231/.2415	.246/.249	.103/.113	.1037.113	.396/.411	.396/.414	.101/.111	.101/.111	.252	1/16	.331	.331	.010/.025	.009/.014
5/16"	.293/.3045	.309/.312	.130/.140	.142/.152	.500/.515	.500/.520	.128/.140	.140/.152	.316	5/64	.414	.414	.010/.025	.009/.016
3/8"	.354/.3675	.371/.374	.157/.167	.171/.181	.613/.628	.613/.637	.154/.166	.166/.182	.378	3/32	.510	.510	.015/.030	.009/.019

3/16" DIA.					1/4" DIA.					5/16" DIA.					3/8" DIA.				
PART NO. ★	Grip Range MIN.	Grip Range MAX.	A	C SEE NOTE (4)	PART NO. ★	Grip Range MIN.	Grip Range MAX.	A	C	PART NO. ★	Grip Range MIN.	Grip Range MAX.	A	C	PART NO. ★	Grip Range MIN.	Grip Range MAX.	A	C
ALSF-T6- 1	.031	.094	.062	.242															
ALSF-T6- 2	.094	.156	.125	.305	ALSF-T8- 2	.094	.156	.125	.366	ALSF-T10- 2	.094	.156	.125	.426	ALSF-T12- 2	.094	.156	.125	.494
ALSF-T6- 3	.156	.219	.187	.367	ALSF-T8- 3	.156	.219	.187	.428	ALSF-T10- 3	.156	.219	.187	.489	ALSF-T12- 3	.156	.219	.187	.556
ALSF-T6- 4	.219	.281	.250	.430	ALSF-T8- 4	.219	.281	.250	.491	ALSF-T10- 4	.219	.281	.250	.551	ALSF-T12- 4	.219	.281	.250	.619
ALSF-T6- 5	.281	.344	.312	.492	ALSF-T8- 5	.281	.344	.312	.553	ALSF-T10- 5	.281	.344	.312	.614	ALSF-T12- 5	.281	.344	.312	.681
ALSF-T6- 6	.344	.406	.375	.555	ALSF-T8- 6	.344	.406	.375	.616	ALSF-T10- 6	.344	.406	.375	.676	ALSF-T12- 6	.344	.406	.375	.744
ALSF-T6- 7	.406	.469	.437	.617	ALSF-T8- 7	.406	.469	.437	.678	ALSF-T10- 7	.406	.469	.437	.739	ALSF-T12- 7	.406	.469	.437	.806
ALSF-T6- 8	.469	.531	.500	.680	ALSF-T8- 8	.469	.531	.500	.741	ALSF-T10- 8	.469	.531	.500	.801	ALSF-T12- 8	.469	.531	.500	.869
ALSF-T6- 9	.531	.594	.562	.742	ALSF-T8- 9	.531	.594	.562	.803	ALSF-T10- 9	.531	.594	.562	.864	ALSF-T12- 9	.531	.594	.562	.931
ALSF-T6-10	.594	.656	.625	.805	ALSF-T8-10	.594	.656	.625	.866	ALSF-T10-10	.594	.656	.625	.926	ALSF-T12-10	.594	.656	.625	.994
ALSF-T6-11	.656	.718	.687	.867	ALSF-T8-11	.656	.718	.687	.928	ALSF-T10-11	.656	.718	.687	.989	ALSF-T12-11	.656	.718	.687	1.058
ALSF-T6-12	.718	.781	.750	.930	ALSF-T8-12	.718	.781	.750	.991	ALSF-T10-12	.718	.781	.750	1.051	ALSF-T12-12	.718	.781	.750	1.119
ALSF-T6-13	.781	.843	.812	.992	ALSF-T8-13	.781	.843	.812	1.053	ALSF-T10-13	.781	.843	.812	1.114	ALSF-T12-13	.781	.843	.812	1.181
ALSF-T6-14	.843	.906	.875	1.055	ALSF-T8-14	.843	.906	.875	1.116	ALSF-T10-14	.843	.906	.875	1.176	ALSF-T12-14	.843	.906	.875	1.244
ALSF-T6-15	.906	.968	.937	1.117	ALSF-T8-15	.906	.968	.937	1.178	ALSF-T10-15	.906	.968	.937	1.239	ALSF-T12-15	.906	.968	.937	1.306
ALSF-T6-16	.968	1.031	1.000	1.180	ALSF-T8-16	.968	1.031	1.000	1.241	ALSF-T10-16	.968	1.031	1.000	1.301	ALSF-T12-16	.968	1.031	1.000	1.369
ALSF-T6-17	1.031	1.094	1.062	1.242	ALSF-T8-17	1.031	1.094	1.062	1.303	ALSF-T10-17	1.031	1.094	1.062	1.364	ALSF-T12-17	1.031	1.094	1.062	1.431
ALSF-T6-18	1.094	1.156	1.125	1.305	ALSF-T8-18	1.094	1.156	1.125	1.366	ALSF-T10-18	1.094	1.156	1.125	1.426	ALSF-T12-18	1.094	1.156	1.125	1.494
ALSF-T6-19	1.156	1.219	1.187	1.367	ALSF-T8-19	1.156	1.219	1.187	1.428	ALSF-T10-19	1.156	1.219	1.187	1.489	ALSF-T12-19	1.156	1.219	1.187	1.556
ALSF-T6-20	1.219	1.281	1.260	1.430	ALSF-T8-20	1.219	1.281	1.260	1.491	ALSF-T10-20	1.219	1.281	1.260	1.551	ALSF-T12-20	1.219	1.281	1.260	1.619
ALSF-T6-21	1.281	1.343	1.312	1.492	ALSF-T8-21	1.281	1.343	1.312	1.553	ALSF-T10-21	1.281	1.343	1.312	1.614	ALSF-T12-21	1.281	1.343	1.312	1.681
ALSF-T6-22	1.343	1.406	1.375	1.555	ALSF-T8-22	1.343	1.406	1.375	1.616	ALSF-T10-22	1.343	1.406	1.375	1.676	ALSF-T12-22	1.343	1.406	1.375	1.744
ALSF-T6-23	1.406	1.469	1.437	1.617	ALSF-T8-23	1.406	1.469	1.437	1.678	ALSF-T10-23	1.406	1.469	1.437	1.739	ALSF-T12-23	1.406	1.469	1.437	1.806
ALSF-T6-24	1.469	1.531	1.500	1.680	ALSF-T8-24	1.469	1.531	1.500	1.741	ALSF-T10-24	1.469	1.531	1.500	1.801	ALSF-T12-24	1.469	1.531	1.500	1.869
ALSF-T6-25	1.531	1.594	1.562	1.742	ALSF-T8-25	1.531	1.594	1.562	1.803	ALSF-T10-25	1.531	1.594	1.562	1.864	ALSF-T12-25	1.531	1.594	1.562	1.931
ALSF-T6-26	1.594	1.656	1.625	1.805	ALSF-T8-26	1.564	1.656	1.625	1.866	ALSF-T10-26	1.594	1.656	1.625	1.926	ALSF-T12-26	1.594	1.656	1.625	1.994
ALSF-T6-27	1.656	1.718	1.687	1.867	ALSF-T8-27	1.656	1.718	1.687	1.928	ALSF-T10-27	1.656	1.718	1.687	1.989	ALSF-T12-27	1.656	1.718	1.687	2.056
ALSF-T6-28	1.718	1.781	1.750	1.930	ALSF-T8-28	1.718	1.781	1.750	1.991	ALSF-T10-28	1.718	1.781	1.750	2.051	ALSF-T12-28	1.718	1.781	1.750	2.119
ALSF-T6-29	1.781	1.843	1.812	1.992	ALSF-T8-29	1.781	1.843	1.812	2.053	ALSF-T10-29	1.781	1.843	1.812	2.114	ALSF-T12-29	1.781	1.843	1.812	2.181
ALSF-T6-30	1.843	1.906	1.875	2.055	ALSF-T8-30	1.843	1.906	1.875	2.116	ALSF-T10-30	1.843	1.906	1.875	2.176	ALSF-T12-30	1.843	1.906	1.875	2.244
										ALSF-T10-31	1.906	1.968	1.937	2.239	ALSF-T12-31	1.906	1.968	1.937	2.306
										ALSF-T10-32	1.968	2.031	2.000	2.301	ALSF-T12-32	1.968	2.031	2.000	2.369
										ALSF-T10-33	2.031	2.094	2.062	2.364	ALSF-T12-33	2.031	2.094	2.062	2.431

★"T"= Alloy Steel. Substitute "E" for 75S-T6 Aluminum Alloy Stump Material.

PART NUMBER EXPLANATION:

ALSF-T6-1 (T) Designates heat treated alloy steel per specification AN-S-9 (A181 4037)

HEAT TREATMENT - Carbon recovery - quench and draw - (Huck Specification 101).

FINISH - Cadmium Plate - QQ-P-416 Type 1, Class C.

IDENTIFICATION - Depressed+ on top of head.

ALSF-E6-1 (E) Designates 75S-T6 Aluminum Alloy QQ-A-282

HEAT TREATMENT - MIL-H-6088 (60 Min. at 910° - 925°F. quench in cold water, age 3 hours at 250°F. & 3 hours at 325°F)

FINISH - Anodize per AN-QQ-A-696 or chemical surface treatment per MIL-C-5541.

IDENTIFICATION - None

COLLARS: Recommended Collar Part Numbers:

Stump	Collar		Stump	Collar
ALSF-T6	LC-C6		ALSF-T12	LC-C12
ALSF-T8	LC-C8		ALSF-E6	LC-F6
ALSF-T6	LC-R6	High	ALSF-E8	LC-F8
ALSF-T8	LC-R8	Temp.	ALSF-E10	LC-F10
ALSF-T10	LC-C10		ALSF-E12	LC-F12

STRENGTH: See ANC-5 Manual for allowables:

LONGER GRIPS THAN SHOWN ABOVE ARE AVAILABLE SPECIAL.

TOOLS: Huckbolt Stumps are installed with standard air hammers or squeezers. Recommended hammer size tabulated below:

Stump	Hammer	Stump	Hammer
ALSF-T6	CP5X ★★	ALSF-E6	CP3X ★★
ALSF-T8	CP7X ★★	ALSF-E8	CP5X ★★
ALSF-T10	IR36C ★★	ALSF-E10	CP7X ★★
ALSF-T12	IR36C ★★	ALSF-E12	IR36 ★★

★★- or equivalent size tool

Write to Huck Mfg. Co. for Swaging Set Sources

HOLE PREPARATIONS:

DIA.	For Interence Fit			For Clearance Fit	
	Pre Drill	Size Drill	Limits	Drill	Limits
3/16"	#18 (.1695)	#13 (.185)	.185/.188	#11(.191)	.191/.201
1/4"	#1 (.228)	6.2mm(.2441)	.244/.247	1/4"	.250/.260
5/16"	"L" (.290)	7.8mm(.3071)	.307/.310	5/16"	.3125/.322
3/8"	11/32(.343)	"U" (.368)	.369/.372	3/8"	.375/.385

NOTES: (1) To install Huckbolt Stumps Hole Filling, prepare holes per above chart and drive the stump into the hole with an air hammer. The collar may then be driven.

(2) The Huckbolt Stump manufactured head must be installed on a surface perpendicular with the axis of the hole. Spot face for other conditions.

(3) Dimension L is dimension A plus values shown under L for grips and diameters listed.

(4) "C" Dimension for 3/16" Alum. is as shown plus .013".

Huck MANUFACTURING CO.
2480 BELLEVUE AVENUE
DETROIT 7, MICHIGAN

AIRCRAFT HUCKBOLT* STUMP FLAT HEAD

*THE ORIGINAL LOCKBOLT

ALSF

FORM 8-181 5-10-54 LITHO IN U.S.A. C&B

Huck MANUFACTURING COMPANY

G DIAMETER PERMISSIBLE FOR K LENGTH UNDER HEAD.

ALLOWABLE SEAM DEPTH, HEAD CONCENTRICITY AND HEAD DISCONTINUITIES PER SPECIFICATION MIL-S-7839.

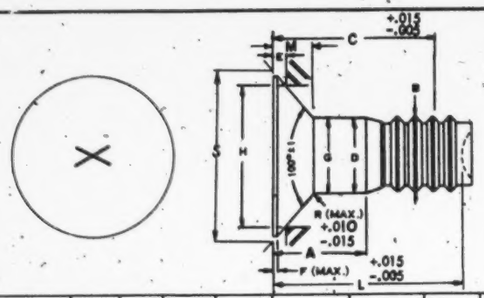

DIA.	B	D	E	MAX. F	G	H	K	L(Alum) SEE NOTE 2	L(Steel) SEE NOTE 2	MAX. M REF.	MAX. R	MAX. S REF.
3/16"	.177/.1845	.187/.190	.0205/.0243	.013	.193	.3270	3/64"	.261	.248	.0842	.015	.3862
1/4"	.233/.2415	.246/.249	.0270/.0310	.017	.252	.4318	1/16"	.331	.331	.1104	.020	.5074
5/16"	.293/.3045	.309/.312	.0325/.0367	.020	.316	.5449	5/64"	.414	.414	.1375	.025	.6343
3/8"	.354/.3675	.371/.374	.0380/.0428	.023	.378	.6580	3/32"	.510	.510	.1654	.030	.7622

3/16" DIA.					1/4" DIA.					5/16" DIA.					3/8" DIA.				
PART NO.	Grip Range MIN.	Grip Range MAX.	A	C SEE NOTE (1)	PART NO.	Grip Range MIN.	Grip Range MAX.	A	C	PART NO.	Grip Range MIN.	Grip Range MAX.	A	C	PART NO.	Grip Range MIN.	Grip Range MAX.	A	C
★					★					★					★				
ASCT509-T6- 2	.094	.156	.125	.305	ASCT509-T8- 2	.094	.156	.125	.366	ASCT509-T10- 3	.156	.219	.187	.489	ASCT509-T12- 3	.156	.219	.187	.556
ASCT509-T6- 3	.156	.219	.187	.367	ASCT509-T8- 3	.156	.219	.187	.428	ASCT509-T10- 4	.219	.281	.250	.551	ASCT509-T12- 4	.219	.281	.250	.619
ASCT509-T6- 4	.219	.281	.250	.430	ASCT509-T8- 4	.219	.281	.250	.491	ASCT509-T10- 5	.281	.344	.312	.614	ASCT509-T12- 5	.281	.344	.312	.681
ASCT509-T6- 5	.281	.344	.312	.492	ASCT509-T8- 5	.281	.344	.312	.553	ASCT509-T10- 6	.344	.406	.375	.676	ASCT509-T12- 6	.344	.406	.375	.744
ASCT509-T6- 6	.344	.406	.375	.555	ASCT509-T8- 6	.344	.406	.375	.616	ASCT509-T10- 7	.406	.469	.437	.739	ASCT509-T12- 7	.406	.469	.437	.806
ASCT509-T6- 7	.406	.469	.437	.617	ASCT509-T8- 7	.406	.469	.437	.678	ASCT509-T10- 8	.469	.531	.500	.801	ASCT509-T12- 8	.469	.531	.500	.869
ASCT509-T6- 8	.469	.531	.500	.680	ASCT509-T8- 8	.469	.531	.500	.741	ASCT509-T10- 9	.531	.594	.562	.864	ASCT509-T12- 9	.531	.594	.562	.931
ASCT509-T6- 9	.531	.594	.562	.742	ASCT509-T8- 9	.531	.594	.562	.803	ASCT509-T10-10	.594	.656	.625	.926	ASCT509-T12-10	.594	.656	.625	.994
ASCT509-T6-10	.594	.656	.625	.805	ASCT509-T8-10	.594	.656	.625	.866	ASCT509-T10-11	.656	.718	.687	.989	ASCT509-T12-11	.656	.718	.687	1.056
ASCT509-T6-11	.656	.718	.687	.867	ASCT509-T8-11	.656	.718	.687	.928	ASCT509-T10-12	.718	.781	.750	1.051	ASCT509-T12-12	.718	.781	.750	1.119
ASCT509-T6-12	.718	.781	.750	.930	ASCT509-T8-12	.718	.781	.750	.991	ASCT509-T10-13	.781	.843	.812	1.114	ASCT509-T12-13	.781	.843	.812	1.181
ASCT509-T6-13	.781	.843	.812	.992	ASCT509-T8-13	.781	.843	.812	1.053	ASCT509-T10-14	.843	.906	.875	1.176	ASCT509-T12-14	.843	.906	.875	1.244
ASCT509-T6-14	.843	.906	.875	1.055	ASCT509-T8-14	.843	.906	.875	1.116	ASCT509-T10-15	.906	.968	.937	1.239	ASCT509-T12-15	.906	.968	.937	1.306
ASCT509-T6-15	.906	.968	.937	1.117	ASCT509-T8-15	.906	.968	.937	1.178	ASCT509-T10-16	.968	1.031	1.000	1.301	ASCT509-T12-16	.968	1.031	1.000	1.369
ASCT509-T6-16	.968	1.031	1.000	1.180	ASCT509-T8-16	.968	1.031	1.000	1.241	ASCT509-T10-17	1.031	1.094	1.062	1.364	ASCT509-T12-17	1.031	1.094	1.062	1.431
ASCT509-T6-17	1.031	1.094	1.062	1.242	ASCT509-T8-17	1.031	1.094	1.062	1.303	ASCT509-T10-18	1.094	1.156	1.125	1.426	ASCT509-T12-18	1.094	1.156	1.125	1.494
ASCT509-T6-18	1.094	1.156	1.125	1.305	ASCT509-T8-18	1.094	1.156	1.125	1.366	ASCT509-T10-19	1.156	1.219	1.187	1.489	ASCT509-T12-19	1.156	1.219	1.187	1.556
ASCT509-T6-19	1.156	1.219	1.187	1.367	ASCT509-T8-19	1.156	1.219	1.187	1.428	ASCT509-T10-20	1.219	1.281	1.260	1.551	ASCT509-T12-20	1.219	1.281	1.260	1.619
ASCT509-T6-20	1.219	1.281	1.260	1.430	ASCT509-T8-20	1.219	1.281	1.260	1.491	ASCT509-T10-21	1.281	1.343	1.312	1.614	ASCT509-T12-21	1.281	1.343	1.312	1.681
ASCT509-T6-21	1.281	1.343	1.312	1.492	ASCT509-T8-21	1.281	1.343	1.312	1.553	ASCT509-T10-22	1.343	1.406	1.375	1.676	ASCT509-T12-22	1.343	1.406	1.375	1.744
ASCT509-T6-22	1.343	1.406	1.375	1.555	ASCT509-T8-22	1.343	1.406	1.375	1.616	ASCT509-T10-23	1.406	1.469	1.437	1.739	ASCT509-T12-23	1.406	1.469	1.437	1.806
ASCT509-T6-23	1.406	1.469	1.437	1.617	ASCT509-T8-23	1.406	1.469	1.437	1.678	ASCT509-T10-24	1.469	1.531	1.500	1.801	ASCT509-T12-24	1.469	1.531	1.500	1.869
ASCT509-T6-24	1.469	1.531	1.500	1.680	ASCT509-T8-24	1.469	1.531	1.500	1.741	ASCT509-T10-25	1.531	1.594	1.562	1.864	ASCT509-T12-25	1.531	1.594	1.562	1.931
ASCT509-T6-25	1.531	1.594	1.562	1.742	ASCT509-T8-25	1.531	1.594	1.562	1.803	ASCT509-T10-26	1.594	1.656	1.625	1.926	ASCT509-T12-26	1.594	1.656	1.625	1.994
ASCT509-T6-26	1.594	1.656	1.625	1.805	ASCT509-T8-26	1.594	1.656	1.625	1.866	ASCT509-T10-27	1.656	1.718	1.687	1.989	ASCT509-T12-27	1.656	1.718	1.687	2.056
ASCT509-T6-27	1.656	1.718	1.687	1.867	ASCT509-T8-27	1.656	1.718	1.687	1.928	ASCT509-T10-28	1.718	1.781	1.750	2.051	ASCT509-T12-28	1.718	1.781	1.750	2.119
ASCT509-T6-28	1.718	1.781	1.750	1.930	ASCT509-T8-28	1.718	1.781	1.750	1.991	ASCT509-T10-29	1.781	1.843	1.812	2.114	ASCT509-T12-29	1.781	1.843	1.812	2.181
ASCT509-T6-29	1.781	1.843	1.812	1.992	ASCT509-T8-29	1.781	1.843	1.812	2.053	ASCT509-T10-30	1.843	1.906	1.875	2.176	ASCT509-T12-30	1.843	1.906	1.875	2.244
ASCT509-T6-30	1.843	1.906	1.875	2.055	ASCT509-T8-30	1.843	1.906	1.875	2.116	ASCT509-T10-31	1.906	1.968	1.937	2.239	ASCT509-T12-31	1.906	1.968	1.937	2.306
										ASCT509-T10-32	1.968	2.031	2.000	2.301	ASCT509-T12-32	1.968	2.031	2.000	2.369
										ASCT509-T10-33	2.031	2.094	2.062	2.364	ASCT509-T12-33	2.031	2.094	2.062	2.431

★"T"=Alloy Steel. Substitute "E" for 75S-T6 Aluminum Alloy Stump Material. (New Aluminum Designation: 7075-T6)

Longer Grips than shown above are available special.

PART NUMBER EXPLANATION:

ASCT509-T6-1 (T) Designates heat treated alloy steel per specification AN-S-9 (AISI-4037)
HEAT TREATMENT - Carbon recovery - quench and draw - Huck Specification 101
FINISH - Cadmium Plate. - QQ-P-416 Type 1, Class C.
IDENTIFICATION - Depressed "X" on top of head.

ASCT509-E6-1 (E) Designates 75S-T6 Aluminum Alloy AN-A-11. (New Alum. Desig.: 7075-T6)
HEAT TREATMENT - MIL-H-6088 (60 Min. at 910° - 925°F; quench in cold water, age 3 hours at 250°F & 3 hours at 325°F.)
FINISH - Anodize per AN-QQ-A-696 or chemical surface treatment per MIL-C-5541.
IDENTIFICATION - Depressed "V" on top of head.

COLLARS: Recommended Collar Part Numbers:

Stump	Collar	Stump	Collar
ASCT509-T6	LC-C6	ASCT509-T12	LC-C12
ASCT509-T8	LC-C8	ASCT509-E6	LC-F6
ASCT509-T6	LC-R6 High Temp.	ASCT509-E8	LC-F8
ASCT509-T8	LC-R8 High Temp.	ASCT509-E10	LC-F10
ASCT509-T10	LC-C10	ASCT509-E12	LC-F12

STRENGTH: See ANC-5 Manual for allowables.

TOOLS: Huckbolt Stumps are installed with standard air hammers or squeezers. Recommended hammer size tabulated below:

Stump	Hammer	Stump	Hammer
ASCT509-T6	CP5X★★	ASCT509-E6	CP3X★★
ASCT509-T8	CP7X★★	ASCT509-E8	CP5X★★
ASCT509-T10	IR36C★★	ASCT509-E10	CP7X★★
ASCT509-T12	IR 36C★★	ASCT509-E12	IR36C★★

★★-or equivalent size tool

Write to Huck Mfg. Co. for Swaging Set Sources

HOLE PREPARATION:

DIA.	For Interference Fit: Pre Drill	Size Drill	Limits	Clearance Fit: Drill	Limits
3/16"	#18 (.1695)	#13 (.185)	.185/.188	#11 (.191)	.191/.201
1/4"	#1 (.228)	6.2mm (.2441)	.244/.247	1/4"	.250/.260
5/16"	"L" (.290)	7.8mm (.3071)	.307/.310	5/16"	.3125/.322
3/8"	11/32" (.343)	"U" (.368)	.369/.372	3/8"	.375/.385

NOTES:
(1) To install Huckbolt Stumps Hole Filling, prepare holes per above chart and drive the stump into the hole with an air hammer. The collar may then be driven.
(2) "C" dimension for 3/16" alum is as shown + .013.
(3) Dimension L is dimension A plus values shown under L for grips and diameters listed.

Huck MANUFACTURING CO.
2480 BELLEVUE AVENUE
DETROIT, MICHIGAN

AIRCRAFT HUCKBOLT* STUMP
ACT-509 SCREW HEAD TYPE
(CLOSE TOLERANCE)
*THE ORIGINAL LOCKBOLT

ASCT509

FORM 8-184 11-15-54

LITHO IN U.S.A. C&B

Huck MANUFACTURING COMPANY

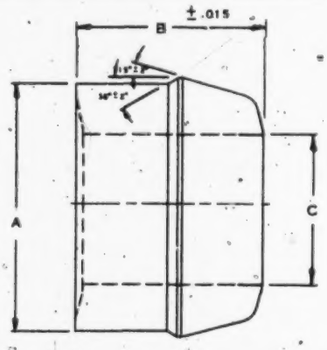

3/16" DIAMETER					
Part Number	Collar Material	A	B	C	Used with Huckbolt Mat'l.
LC-C6	24S-T4 Alum.	.304 .311	.248	.187 .193	Alloy Steel
LC-R6	Steel	.304 .311	.248	.187 .193	Alloy Steel (See Note 4)
LC-F6	61S-T6 Alum.	.304 .311	.248	.193 .199	24S-T Alum. 75S-T Alum.

1/4" DIAMETER					
Part Number	Collar Material	A	B	C	Used with Huckbolt Mat'l.
LC-C8	24S-T4 Alum.	.402 .409	.320	.246 .254	Alloy Steel
LC-R8	Steel	.402 .409	.320	.259 .265	Alloy Steel (See Note 4)
LC-F8	61S-T6 Alum.	.402 .409	.320	.259 .265	24S-T Alum. 75S-T Alum.

5/16" DIAMETER					
Part Number	Collar Material	A	B	C	Used with Huckbolt Mat'l.
LC-C10	24S-T4 Alum.	.498 .507	.365	.304 .312	Alloy Steel
LC-F10	61S-T6 Alum.	.498 .507	.365	.304 .312	24S-T Alum. 75S-T Alum.

3/8" DIAMETER					
Part Number	Collar Material	A	B	C	Used with Huckbolt Mat'l.
LC-C12	24S-T4 Alum.	.599 .610	.494	.371 .378	Alloy Steel
LC-F12	61S-T6 Alum.	.599 .610	.445	.371 .378	24S-T Alum. 75S-T Alum.

Part Number	Collar Material	Specifications
LC-C	24S-T4 Alum.	AN-QQ-W-298 Anodized per AN-QQ-A-696 Identification - Dyed Green
LC-R	Mild Steel (C1006)	Cadmium Plated per Specification QQ-P-416, Type 1, Class C.
LC-F	61S-T6 Alum.	QQ-A-325 Identification - Plain Gray

NOTES:

1. Collars are furnished lubricated. If collars are degreased for any reason re-lubricate with a solution of the following proportions:

   1.4 Pounds Paraffine
   .6 Pound Mutton Tallow
   1 Gallon Solvent (Tri-chlor-ethylene)

2. Collars may be driven with Huckbolts, on a surface not exceeding 7° from perpendicular with the axis of the hole or on curved surfaces with a minimum radius of curvature of three times pin diameter.

3. Huckbolt Collars should be ordered by part number corresponding to the diameter and material of Huckbolt used.

4. Steel Collars (LC-R) are recommended for use with Alloy Steel Huckbolts for high temperature applications.

Huck MANUFACTURING CO.
2480 BELLEVUE AVENUE
DETROIT 7, MICHIGAN

AIRCRAFT
HUCKBOLT COLLAR

LC

FORM 8-160 - 3-1-54

LITHO IN U.S.A. C&B

484

SLS

FEATHERWEIGHT

SHEAR
AIRCRAFT
HUCKBOLT
STUMP

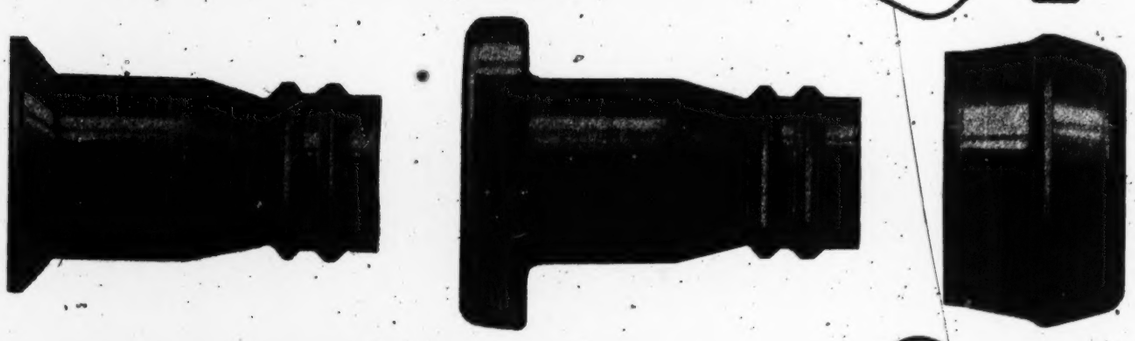

HUCK Manufacturing Company

2480 BELLEVUE AVE. • DETROIT 7, MICH.
PHONE WALNUT 1-6207

[fol. 1085]

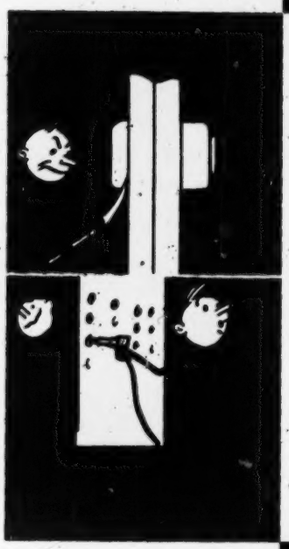

OUTSTANDING ADVANTAGES OF FEATHERWEIGHT SHEAR AIRCRAFT HUCKBOLT STUMPS

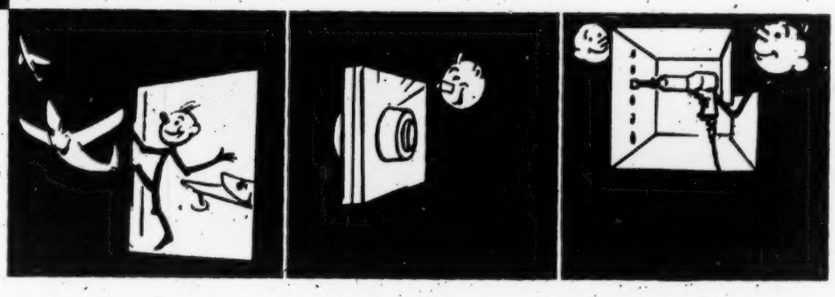

HIGH STRENGTH — WEIGHT RATIO — SLS Shear Type Huckbolt Stumps provide maximum shear strength for minimum weight, yet meet the most critical requirements of aircraft designers.

HIGH CLINCH AND HIGH TENSILE PRELOAD— When hammer or squeezer-driving the SLS Huckbolt Stumps the sheets of work are driven together for optimum structural rigidity in shear as well as insuring gas and pressure tightness (maintaining the tradition established by the standard Huckbolt Stump). Close tolerance shanks facilitate use in interference fit holes to further improve tightness.

NO LOOSENING DUE TO OVERDRIVING—The swaging set never touches the Stump and therefore no loosening due to overdriving—most helpful in deep countersinks.

INCREASES PRODUCTION—The fast driving speed of SLS Huckbolts coupled with the simplicity of their operation which requires only two unskilled or semi-skilled laborers means greater production for your dollar.

LOW NOISE LEVEL—The ease of driving keeps noise level at a minimum.

IDEAL FOR CLOSE CLEARANCE APPLICATIONS— Low driving forces permit a variety of offset driving tools to be used for hard-to-get-to applications.

486

[fol. 1086]

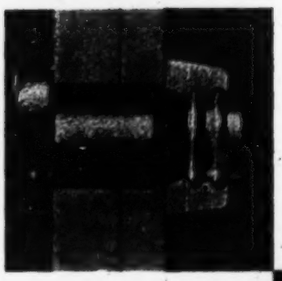

GENERAL TECHNICAL INFORMATION ON THE FEATHERWEIGHT SLS HUCKBOLT

STRENGTH PROPERTIES

SLS HUCKBOLT DIAMETER	ALLOWABLE TENSION	ALLOWABLE SHEAR
3/16" Diameter	1,105 lbs.	2,620 lbs.
1/4" Diameter	2,040 lbs.	4,650 lbs.
5/16" Diameter	3,250 lbs.	7,300 lbs.
3/8" Diameter	5,050 lbs.	10,500 lbs.

SPECIFICATIONS

PIN

Material: Heat Treated Alloy Steel per AN-S-9 (AISI 4037)

Heat Treat: Carbon Recovery—Quench and Draw (Huck Spec. 101)

Finish: Cadmium Plate QQ-P-416 Type 1—Class C .0002 to .0005 thickness.

COLLAR

Material: 24S-T4 (2024-T4) Aluminum Alloy per AN-QQ-W-298

Finish: Anodized per AN-QQ-A-696 or Chemical Film per MIL-C-5541

Identification: Dyed Yellow

HOLE TOLERANCES AND DRILLING PROCEDURE

Suggested hole drilling procedures are shown on specification sheets pages 6, 7, 8, 9.

FOR INTERFERENCE FIT ASSEMBLY—Holes are prepared smaller than the shank diameter of the fasteners and the SLS is driven into the hole before the collar is applied.

FOR CLEARANCE FIT ASSEMBLY—Holes are prepared larger than the shank diameter of the SLS and the SLS is fully inserted in the hole before the collar and swaging set is applied.

SHOP PRACTICE NOTES

1. Steel or 24ST aluminum washers may be used under Huckbolt Stump head or collar to make up grip, if required.
2. Stumps and collars are lubricated and must not be degreased if proper driving characteristics are to be maintained.
3. Collars may be removed by splitting axially with a chisel, with a nut splitter, or a self-centering Collar Splitter available directly from Huck Manufacturing Company.
4. Where removal is necessary, another Huckbolt of the same diameter may be used as a replacement since the hole is enlarged only slightly. It is possible to make several replacements in the same hole and still maintain an interference fit.
5. The same swaging sets used to install the standard ALS Stump are used to install the SLS Shear Type Huckbolt Stump.
6. A special countersink cutter is required for use when driving hole filling countersunk head type Huckbolt Stumps into material of equal or greater hardness than the Huckbolt Stump material. The special cutters provide an extruding angle at the base of the countersink. These cutters are available from most manufacturers of micrometer stop countersinks. Sources are available upon inquiry to the Huck Manufacturing Company.

487

[fol. 1087]

NOMENCLATURE OF THE SLS HUCKBOLT STUMP

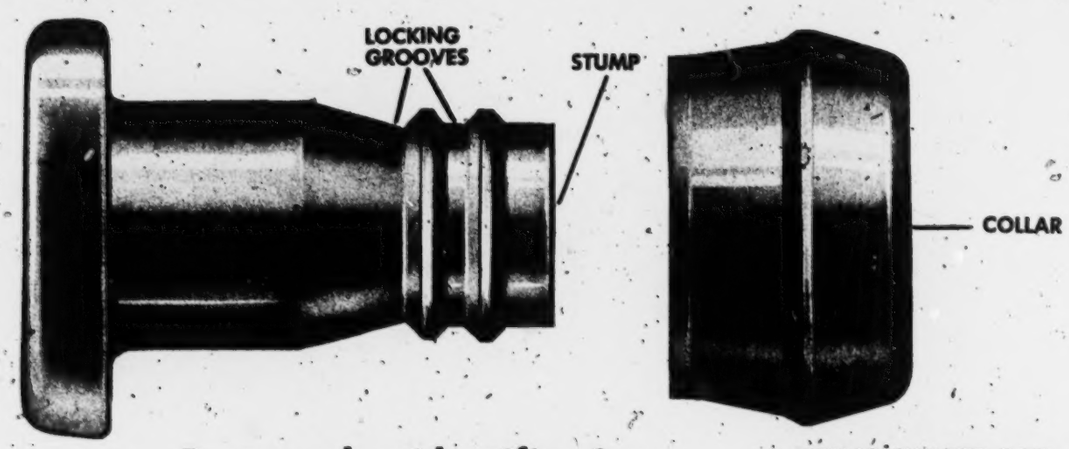

Part number identification

SLS P-T6-4

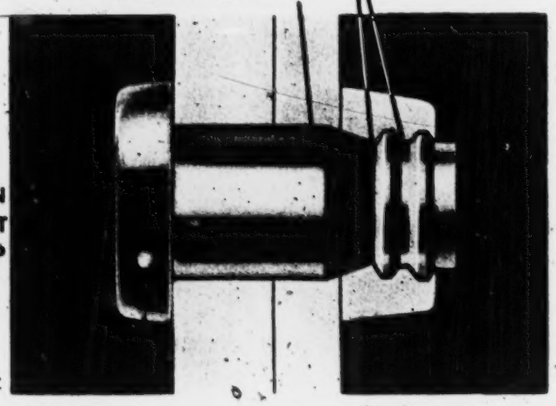

GRIP LENGTHS—MAXIMUM THICKNESS IN 16ths MINUS 1/16"

DIAMETER
6 = 3/16"
8 = 1/4"
10 = 5/16"
12 = 3/8"

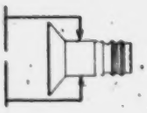

MATERIAL T = ALLOY STEEL MATERIAL

HEAD TYPE P = PROTRUDING HEAD
100 = 100° COUNTERSUNK HEAD (CLOSE TOLERANCE)

SHEAR AIRCRAFT HUCKBOLT STUMP

Identification—Depressed "H" in Center of Head

488

[fol. 1088]

DRIVING STEPS OF THE SLS FEATHERWEIGHT HUCKBOLT STUMPS

Huckbolt Stumps are quickly and easily installed with a minimum amount of effort using pneumatic air hammers or rivet squeezers equipped with swaging sets.

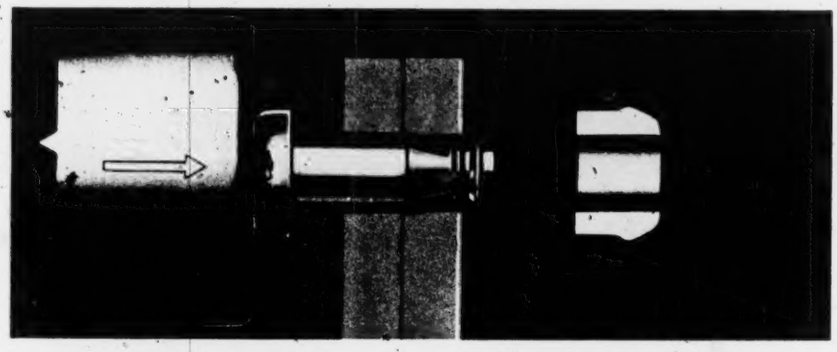

Step 1.—Insert the stump in the prepared hole. If interference fit is required drive the stump into the hole with a hammer or air hammer.

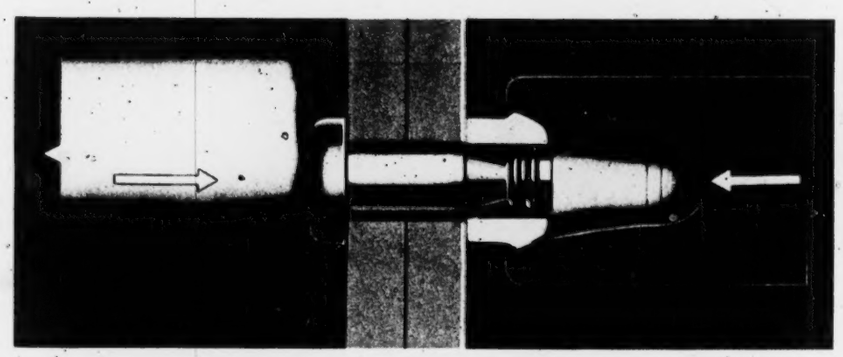

Step 2.—Apply collar to groove end of stump and swaging set to collar. Use bucking bar against head. The air hammer can be applied to the swaging set or to the bucking bar depending upon the rigidity of the work.

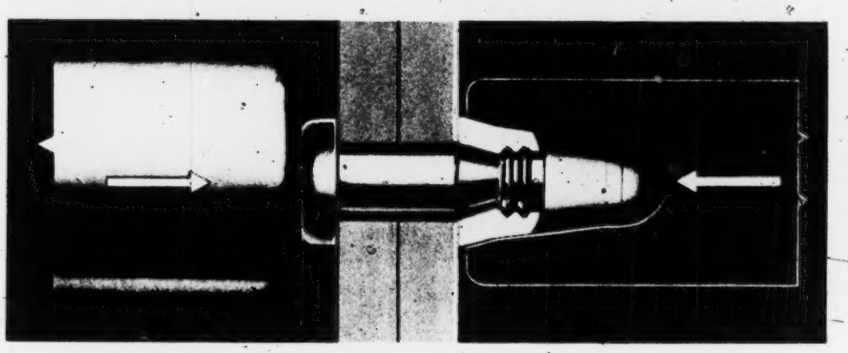

Step 3.—The swaging set is forced down over the collar, swaging collar material into the grooves providing a positive lock. Note that the swaging set DOES NOT touch the stump to loosen.

[fol. 1089]

SLS——————————————— 3/16 HUCKBOLT STUMP

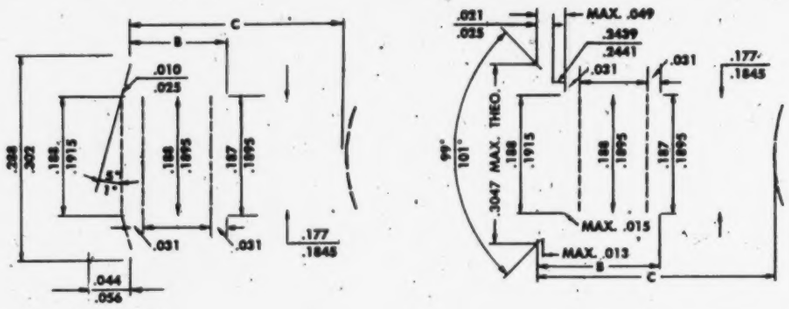

PART NUMBER PROTRUDING	PART NUMBER COUNTERSUNK	GRIP NUMBER	GRIP RANGE MINIMUM	GRIP RANGE MAXIMUM	+.010 −.010 B	+.010 −.000 C
SLSP-T6		1	zero	.062	.062	.256
SLSP-T6	SLS100-T6	2	.062	.125	.125	.319
SLSP-T6	SLS100-T6	3	.125	.187	.187	.381
SLSP-T6	SLS100-T6	4	.187	.250	.250	.444
SLSP-T6	SLS100-T6	5	.250	.312	.312	.506
SLSP-T6	SLS100-T6	6	.312	.375	.375	.569
SLSP-T6	SLS100-T6	7	.375	.437	.437	.631
SLSP-T6	SLS100-T6	8	.437	.500	.500	.694
SLSP-T6	SLS100-T6	9	.500	.562	.562	.756
SLSP-T6	SLS100-T6	10	.562	.625	.625	.819
SLSP-T6	SLS100-T6	11	.625	.687	.687	.881
SLSP-T6	SLS100-T6	12	.687	.750	.750	.944
SLSP-T6	SLS100-T6	13	.750	.812	.812	1.006
SLSP-T6	SLS100-T6	14	.812	.875	.875	1.069
SLSP-T6	SLS100-T6	15	.875	.937	.937	1.131
SLSP-T6	SLS100-T6	16	.937	1.000	1.000	1.194
SLSP-T6	SLS100-T6	17	1.000	1.062	1.062	1.256
SLSP-T6	SLS100-T6	18	1.062	1.125	1.125	1.319
SLSP-T6	SLS100-T6	19	1.125	1.187	1.187	1.381
SLSP-T6	SLS100-T6	20	1.187	1.250	1.250	1.444
SLSP-T6	SLS100-T6	21	1.250	1.312	1.312	1.506
SLSP-T6	SLS100-T6	22	1.312	1.375	1.375	1.569
SLSP-T6	SLS100-T6	23	1.375	1.437	1.437	1.631
SLSP-T6	SLS100-T6	24	1.437	1.500	1.500	1.694
SLSP-T6	SLS100-T6	25	1.500	1.562	1.562	1.756
SLSP-T6	SLS100-T6	26	1.562	1.625	1.625	1.819
SLSP-T6	SLS100-T6	27	1.625	1.687	1.687	1.881
SLSP-T6	SLS100-T6	28	1.687	1.750	1.750	1.944
SLSP-T6	SLS100-T6	29	1.750	1.812	1.812	2.006
SLSP-T6	SLS100-T6	30	1.812	1.875	1.875	2.069
SLSP-T6	SLS100-T6	31	1.875	1.937	1.937	2.131
SLSP-T6	SLS100-T6	32	1.937	2.000	2.000	2.194

PART NUMBER
6LC-C6

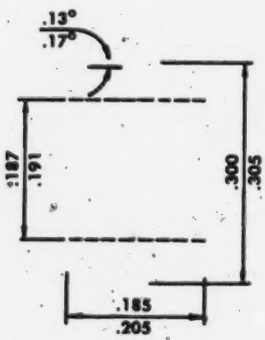

SUGGESTED HOLE PREPARATION

INTERFERENCE FIT PRE-DRILL	INTERFERENCE FIT SIZE DRILL	LONG GRIP SIZE DRILL	CLEARANCE FIT LIMITS	CLEARANCE FIT DRILL	MIN. HOLE
# 18 (1695)	# 13 (.185)	4.75MM (.187)	.185 .188	# 11 (.191)	.191

[fol. 1090]

1/4 HUCKBOLT STUMP — SLS

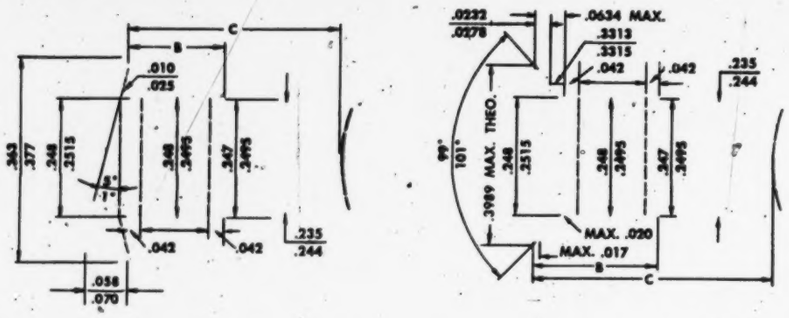

PART NUMBER		GRIP	GRIP RANGE		+.010 −.010	+.010 −.000
PROTRUDING	COUNTERSUNK	NUMBER	MINIMUM	MAXIMUM	B	C
SLSP-T8	SLS100-T8	2	.062	.125	.125	.371
SLSP-T8	SLS100-T8	3	.125	.187	.187	.433
SLSP-T8	SLS100-T8	4	.187	.250	.250	.496
SLSP-T8	SLS100-T8	5	.250	.312	.312	.558
SLSP-T8	SLS100-T8	6	.312	.375	.375	.621
SLSP-T8	SLS100-T8	7	.375	.437	.437	.683
SLSP-T8	SLS100-T8	8	.437	.500	.500	.746
SLSP-T8	SLS100-T8	9	.500	.562	.562	.808
SLSP-T8	SLS100-T8	10	.562	.625	.625	.871
SLSP-T8	SLS100-T8	11	.625	.687	.687	.933
SLSP-T8	SLS100-T8	12	.687	.750	.750	.996
SLSP-T8	SLS100-T8	13	.750	.812	.812	1.058
SLSP-T8	SLS100-T8	14	.812	.875	.875	1.121
SLSP-T8	SLS100-T8	15	.875	.937	.937	1.183
SLSP-T8	SLS100-T8	16	.937	1.000	1.000	1.246
SLSP-T8	SLS100-T8	17	1.000	1.062	1.062	1.308
SLSP-T8	SLS100-T8	18	1.062	1.125	1.125	1.371
SLSP-T8	SLS100-T8	19	1.125	1.187	1.187	1.433
SLSP-T8	SLS100-T8	20	1.187	1.250	1.250	1.496
SLSP-T8	SLS100-T8	21	1.250	1.312	1.312	1.558
SLSP-T8	SLS100-T8	22	1.312	1.375	1.375	1.621
SLSP-T8	SLS100-T8	23	1.375	1.437	1.437	1.683
SLSP-T8	SLS100-T8	24	1.437	1.500	1.500	1.746
SLSP-T8	SLS100-T8	25	1.500	1.562	1.562	1.808
SLSP-T8	SLS100-T8	26	1.562	1.625	1.625	1.871
SLSP-T8	SLS100-T8	27	1.625	1.687	1.687	1.933
SLSP-T8	SLS100-T8	28	1.687	1.750	1.750	1.996
SLSP-T8	SLS100-T8	29	1.750	1.812	1.812	2.058
SLSP-T8	SLS100-T8	30	1.812	1.875	1.875	2.121
SLSP-T8	SLS100-T8	31	1.875	1.937	1.937	2.183
SLSP-T8	SLS100-T8	32	1.937	2.000	2.000	2.246

PART NUMBER
6LC-C8

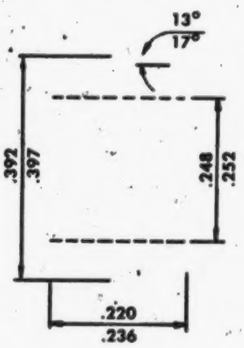

SUGGESTED HOLE PREPARATION

INTERFERENCE FIT		LONG GRIP	CLEARANCE FIT		
PRE-DRILL	SIZE DRILL	SIZE DRILL	LIMITS	DRILL	MIN. HOLE
# 1 (.228)	6.2MM (.2441)	"D" (.246)	.244 .247	¼" (.250)	.250

SLS——————————————5/16 HUCKBOLT STUMP

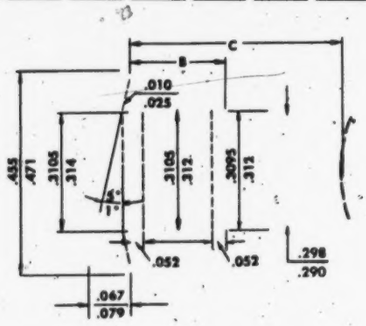

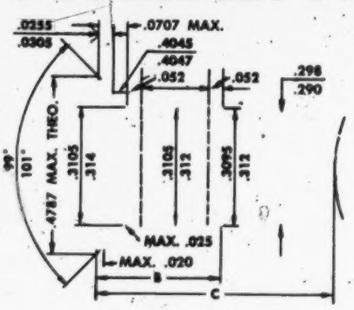

PART NUMBER PROTRUDING	PART NUMBER COUNTERSUNK	GRIP NUMBER	GRIP RANGE MINIMUM	GRIP RANGE MAXIMUM	+.010 −.010 B	+.010 −.000 C
SLSP-T10		2	.062	.125	.125	.390
SLSP-T10	SLS100-T10	3	.125	.187	.187	.453
SLSP-T10	SLS100-T10	4	.187	.250	.250	.515
SLSP-T10	SLS100-T10	5	.250	.312	.312	.578
SLSP-T10	SLS100-T10	6	.312	.375	.375	.640
SLSP-T10	SLS100-T10	7	.375	.437	.437	.703
SLSP-T10	SLS100-T10	8	.437	.500	.500	.765
SLSP-T10	SLS100-T10	9	.500	.562	.562	.828
SLSP-T10	SLS100-T10	10	.562	.625	.625	.890
SLSP-T10	SLS100-T10	11	.625	.687	.687	.953
SLSP-T10	SLS100-T10	12	.687	.750	.750	1.015
SLSP-T10	SLS100-T10	13	.750	.812	.812	1.078
SLSP-T10	SLS100-T10	14	.812	.875	.875	1.140
SLSP-T10	SLS100-T10	15	.875	.937	.937	1.203
SLSP-T10	SLS100-T10	16	.937	1.000	1.000	1.265
SLSP-T10	SLS100-T10	17	1.000	1.062	1.062	1.328
SLSP-T10	SLS100-T10	18	1.062	1.125	1.125	1.390
SLSP-T10	SLS100-T10	19	1.125	1.187	1.187	1.453
SLSP-T10	SLS100-T10	20	1.187	1.250	1.250	1.515
SLSP-T10	SLS100-T10	21	1.250	1.312	1.312	1.578
SLSP-T10	SLS100-T10	22	1.312	1.375	1.375	1.640
SLSP-T10	SLS100-T10	23	1.375	1.437	1.437	1.703
SLSP-T10	SLS100-T10	24	1.437	1.500	1.500	1.765
SLSP-T10	SLS100-T10	25	1.500	1.562	1.562	1.828
SLSP-T10	SLS100-T10	26	1.562	1.625	1.625	1.890
SLSP-T10	SLS100-T10	27	1.625	1.687	1.687	1.953
SLSP-T10	SLS100-T10	28	1.687	1.750	1.750	2.015
SLSP-T10	SLS100-T10	29	1.750	1.812	1.812	2.078
SLSP-T10	SLS100-T10	30	1.812	1.875	1.875	2.140
SLSP-T10	SLS100-T10	31	1.875	1.937	1.937	2.203
SLSP-T10	SLS100-T10	32	1.937	2.000	2.000	2.265

PART NUMBER
6LC-C10

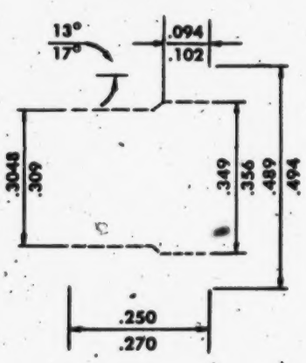

SUGGESTED HOLE PREPARATION

INTERFERENCE FIT PRE-DRILL	INTERFERENCE FIT SIZE DRILL	INTERFERENCE FIT LIMITS	CLEARANCE FIT DRILL	CLEARANCE FIT MIN. HOLE
"L" .290	7.8MM .3071	.307 .310	5/16"	.3125

[fol. 1092]

3/8 HUCKBOLT STUMP — SLS

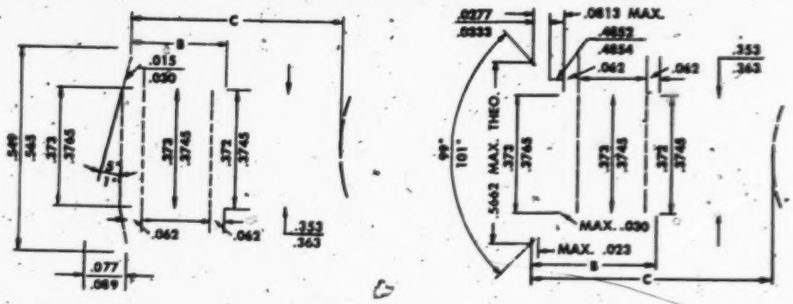

PART NUMBER PROTRUDING	PART NUMBER COUNTERSUNK	GRIP NUMBER	GRIP RANGE MINIMUM	GRIP RANGE MAXIMUM	+.010 −.010 B	+.010 −.000 C
SLSP-T12		2	.062	.125	.125	.433
SLSP-T12	SLS100-T12	3	.125	.187	.187	.496
SLSP-T12	SLS100-T12	4	.187	.250	.250	.558
SLSP-T12	SLS100-T12	5	.250	.312	.312	.621
SLSP-T12	SLS100-T12	6	.312	.375	.375	.683
SLSP-T12	SLS100-T12	7	.375	.437	.437	.746
SLSP-T12	SLS100-T12	8	.437	.500	.500	.808
SLSP-T12	SLS100-T12	9	.500	.562	.562	.871
SLSP-T12	SLS100-T12	10	.562	.625	.625	.933
SLSP-T12	SLS100-T12	11	.625	.687	.687	.996
SLSP-T12	SLS100-T12	12	.687	.750	.750	1.058
SLSP-T12	SLS100-T12	13	.750	.812	.812	1.121
SLSP-T12	SLS100-T12	14	.812	.875	.875	1.183
SLSP-T12	SLS100-T12	15	.875	.937	.937	1.246
SLSP-T12	SLS100-T12	16	.937	1.000	1.000	1.308
SLSP-T12	SLS100-T12	17	1.000	1.062	1.062	1.371
SLSP-T12	SLS100-T12	18	1.062	1.125	1.125	1.433
SLSP-T12	SLS100-T12	19	1.125	1.187	1.187	1.496
SLSP-T12	SLS100-T12	20	1.187	1.250	1.250	1.558
SLSP-T12	SLS100-T12	21	1.250	1.312	1.312	1.621
SLSP-T12	SLS100-T12	22	1.312	1.375	1.375	1.683
SLSP-T12	SLS100-T12	23	1.375	1.437	1.437	1.746
SLSP-T12	SLS100-T12	24	1.437	1.500	1.500	1.808
SLSP-T12	SLS100-T12	25	1.500	1.562	1.562	1.871
SLSP-T12	SLS100-T12	26	1.562	1.625	1.625	1.933
SLSP-T12	SLS100-T12	27	1.625	1.687	1.687	1.996
SLSP-T12	SLS100-T12	28	1.687	1.750	1.750	2.058
SLSP-T12	SLS100-T12	29	1.750	1.812	1.812	2.121
SLSP-T12	SLS100-T12	30	1.812	1.875	1.875	2.183
SLSP-T12	SLS100-T12	31	1.875	1.937	1.937	2.246
SLSP-T12	SLS100-T12	32	1.937	2.000	2.000	2.308

PART NUMBER
6LC-C12

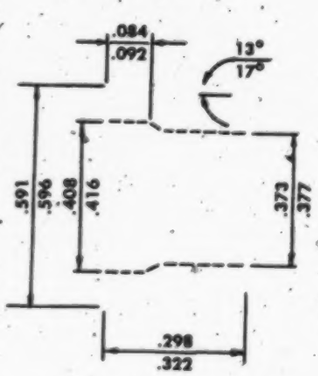

SUGGESTED HOLE PREPARATION

INTERFERENCE FIT PRE-DRILL	INTERFERENCE FIT SIZE DRILL	LONG GRIP SIZE DRILL	CLEARANCE FIT LIMITS	CLEARANCE FIT DRILL	MIN. HOLE
11/32"	"U"	9.4MM	.369	3/8"	.375
.343	.368	.3701	.372		

[fol. 1093]

SLS SWAGING SETS FOR SLS HUCKBOLT STUMPS

CUP DIMENSIONS

The swaging sets described below may be used on SLS Shear Huckbolt Stumps or ALS Huckbolt Stumps with equal facility.

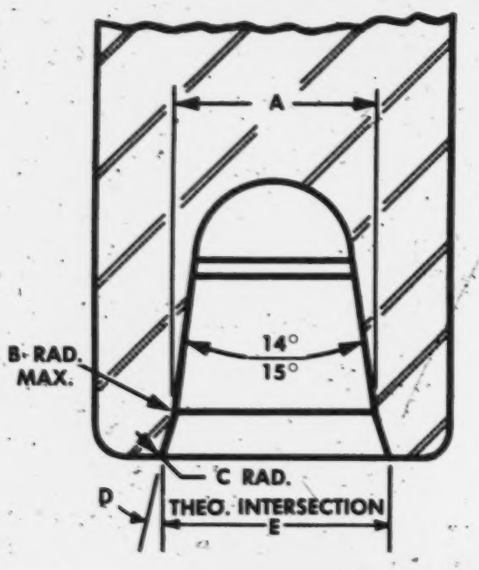

HUCKBOLT NO.	A	B	C	D	E
SLS-T6	.289 / .286	1/8"	.014 / .009	16° / 15°	.317 / .314
SLS-T8	.379 / .376	1/8"	.016 / .011	16° / 15°	.415 / .412
SLS-T10	.471 / .468	5/32"	.030 / .025	18° / 17°	.531 / .528
SLS-T12	.569 / .566	5/32"	.035 / .030	18° / 17°	.625 / .622

SWAGING SET DIMENSIONS

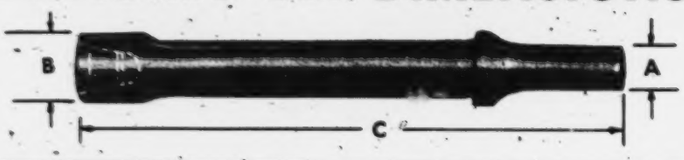

HUCKBOLT NO.	PART NUMBER	A	B	C
SLS-T6	915-1-6A	.401	.562	2⅜"
SLS-T8	[redacted]915-1-8A	.498	.625	2⅜"
SLS-T10	915-1-10A	.498	1.000	3½"
SLS-T12	915-1-12A*	.498	1.000	3½"

*SLS only.

The Swaging sets shown above are available from Huck Manufacturing Company. Please write directly to Huck for recommended sources for set configurations other than those shown above.

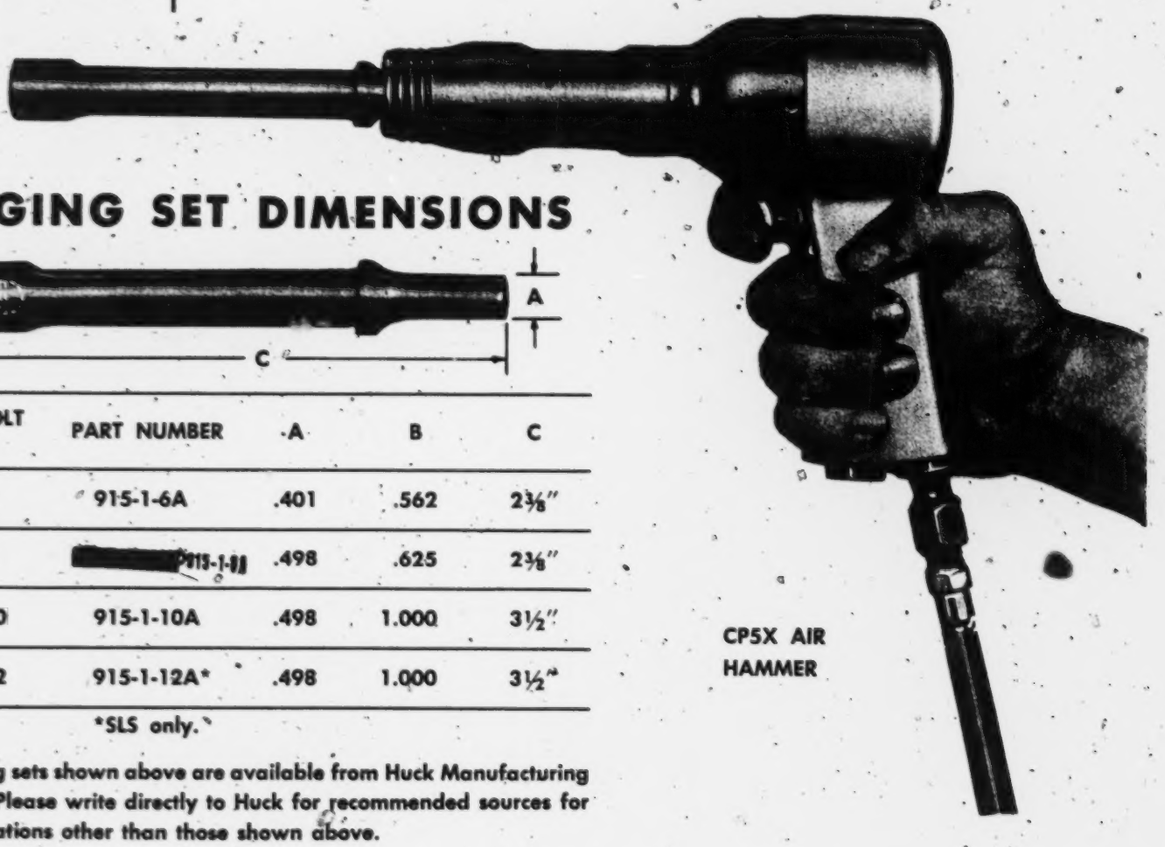

CP5X AIR HAMMER

[fol. 1094]

INSPECTION OF INSTALLED HUCKBOLT STUMPS

SLS

GAGE DIMENSIONS

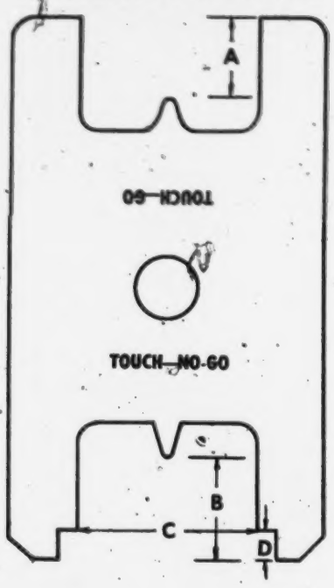

(Normally visual inspection is adequate—if in doubt or if controversy arises use strip gages as shown below).

GAGE NO.	HUCKBOLT NO.	A	B	C	D
HG75-1	SLS-T6	.197 / .194	.266 / .263	.2785 / .2765	.115 / .113
HG75-2	SLS-T8	.246 / .249	.318 / .315	.3694 / .3674	.140 / .138
HG75-3	SLS-T10	.265 / .268	.337 / .334	.4710 / .4690	.130 / .128
HG75-4	SLS-T12	.308 / .311	.380 / .377	.5647 / .5627	.160 / .158

GAGE USE

CHECKING STUMP FOR MINIMUM GRIP AND COLLAR SWAGE

A. Center gage on collar TOUCH NO-GO side down.

B. If point A does not touch center of Stump, Huckbolt is driven over minimum grip and is O.K.

C. If point A touches center of Stump, Huckbolt is driven under minimum grip—REJECT —use next shorter Stump.

D. If point B touches collar swage is insufficient. Drive further.

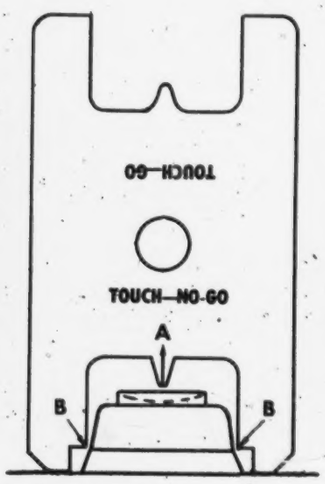

CHECKING STUMP FOR MAXIMUM GRIP

A. Reverse gage and center on collar TOUCH - GO side down.

B. If point C touches, Stump is driven under maximum grip and is O.K.

C. If point C does not touch, Stump is driven over maximum grip — REJECT — use next longer stump.

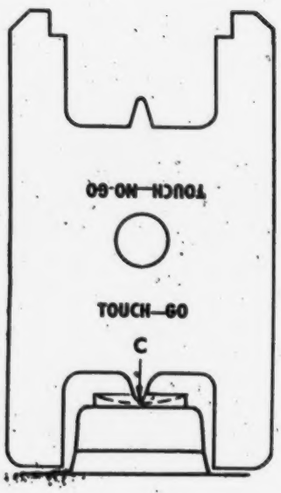

When collars are installed against slopes (7° max.) inspect in plane A-A.

[fol. 1095]

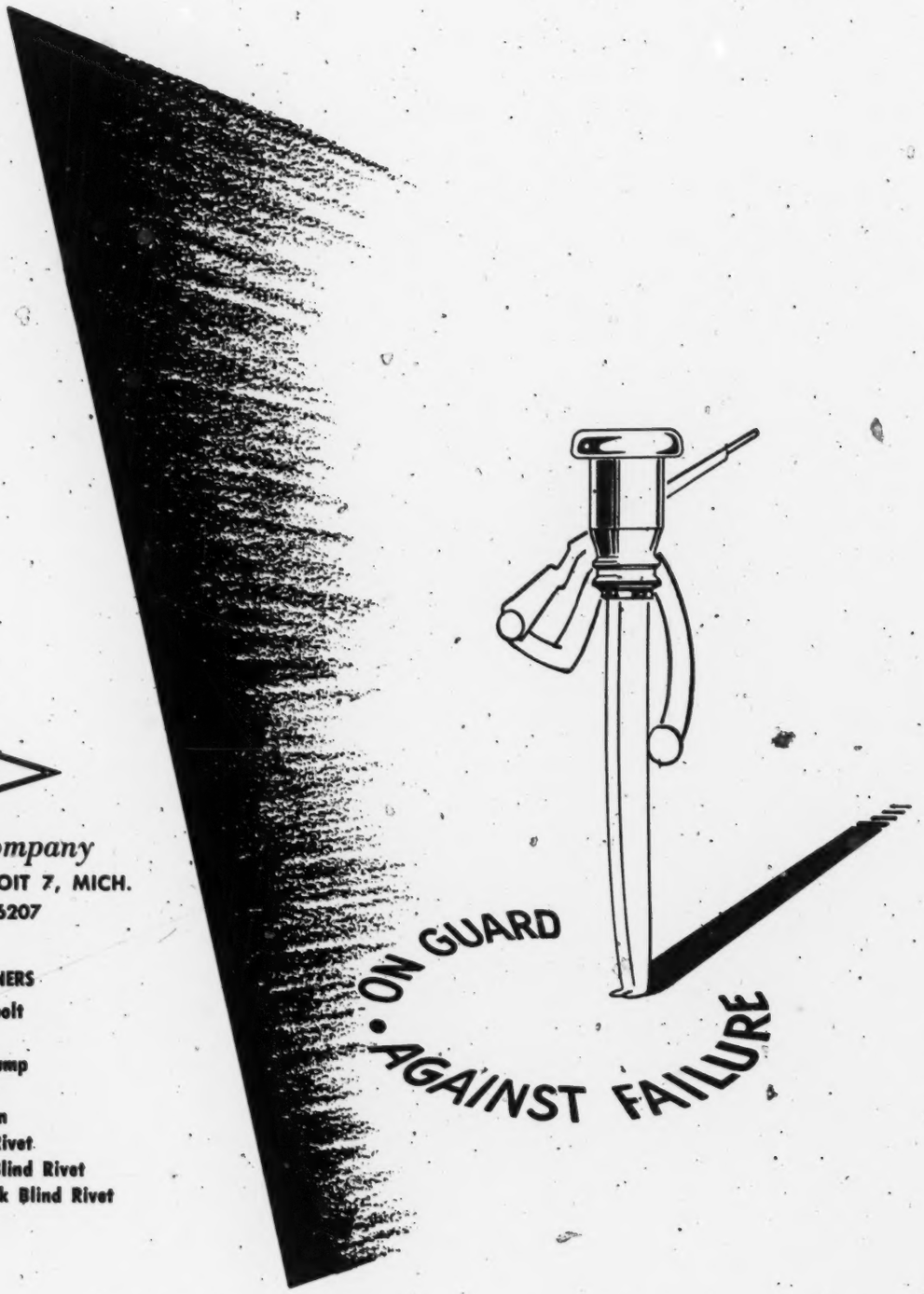

HUCK

Manufacturing Company

2480 BELLEVUE AVE. DETROIT 7, MICH.
PHONE WALNUT 1-6207

OTHER HUCK FASTENERS

SAI — Shear Aircraft Huckbolt
AL — Aircraft Huckbolt
ALS — Aircraft Huckbolt Stump
CL — Commercial Huckbolt
9SP — Self Plugging Huckpin
PT — Pull Through Blind Rivet
OS — Oversize Structural Blind Rivet
CKL — Conical Keystone Lock Blind Rivet
BL — Blind Huckbolt

PRINTED IN U.S.A. FORM NO. 8-353 JUNE, 1958

[fol. 1096] IN THE UNITED STATES DISTRICT COURT FOR THE EASTERN DISTRICT OF MICHIGAN

GOVERNMENT'S EXHIBIT No. 20

Criminal Action No. 39017

UNITED STATES OF AMERICA, Plaintiff,

v.

HUCK MANUFACTURING COMPANY, TOWNSEND COMPANY, A. WATSON ARMOUR, III, FRED R. DICKENSON, Defendants.

STIPULATION OF TESTIMONY BY DANTE C. FABIANI

It is hereby stipulated by all parties to this action by their attorneys as follows:

If called to testify in this criminal action, Mr. Dante C. Fabiani, now President of Crane Company, New York, New York, and formerly an officer of Townsend Company, defendant in this action, would state under oath—

(1) that the signature made by D. C. Fabiani appearing on page 7 of document bearing the title "Agreement" and identified by the symbol J-605 and bearing the dates November 1, 1955 and October 26, 1955 on the final page of that 7-page document is his signature bearing witness to the genuineness and authenticity of the signature made by F. R. Dickenson in his presence, which also appears on that page;

(2) that the signature made by D. C. Fabiani appearing on a letter dated May 7, 1959, which letter is appended to and supplements the "Sales Agreement" dated October 22, 1958, and which sales agreement is identified by the symbol J-566, between Huck Manufacturing Company and Townsend Company is his signature [fol. 1097] bearing witness to the genuineness and authenticity to the signature of F. R. Dickenson made in his presence, which also appears on that page;

(3) that the signature D. C. Fabiani appearing on page 5 of the document bearing the title "Blind Lockbolt Agreement" and the identifying symbol J-595 and

the dates June 25, 1958 and July 3, 1958 on the final page of that 5-page document is his signature bearing witness to the genuineness and authenticity of the signature made by F. R. Dickenson in his presence, which also appears on that page.

/s/ Charles R. Esherick, /s/ Jack L. Lipson, Attorneys, Department of Justice. Date: February 25, 1963.

/s/ James E. Haggerty, Attorney, Huck Manufacturing Company and A. Watson Armour, III. Date: —.

/s/ Thomas Pomeroy, Jr., /s/ Samuel McCune, Attorneys, Townsend Company and Fred R. Dickenson. Date: February 26, 1963.

[fol. 1098] IN THE UNITED STATES DISTRICT COURT FOR THE EASTERN DISTRICT OF MICHIGAN

GOVERNMENT'S EXHIBIT No. 24

HUCK MANUFACTURING COMPANY
Sales Engineer's Report

Date: Sept. 4, 5, 6, 7, 1951.

To: Sales Department.

From: R. Looker.

Company: Consolidated Vultee Aircraft Corporation.
Street & City: Fort Worth.

State: Texas.

Products: B36 Aircraft.

☒ Personal

Distribution: L. C. Huck, A. W. Armour III, W. J. Westrick, F.A.D.

Personnel Contacted: See below.

Details of Sales or Tool Report: Marion L. Hicks, Assistant Gen. Mgr., Jake H. Deitzer, Chief of Materials, Henry Jones, Purchasing Agent, Charlie Dawson, Patent

Attorney, Lester Munroe, Executive Assistant, Roy Lind, S.A.P.D., Ed Kurzava, Group 5-Buying Supervisor, Al Higgins, Dev. Manager, J. E. MacBride, Rivet. Tooling, Jack Fain, General Foreman # 46, Ed Faulkner, General Foreman # 45.

1. On the morning of September 4, 1951 the writer together with Messrs. Huck, and Unfried met with Messrs. Hicks, Deitzer, Jones, and Dawson. Mr. Hicks, representing management at that meeting, stated that it was not the policy of Convair to infringe or encourage the infringement of patents. He stated that Convair regretted the unfortunate incident that Cherry Lockbolts had been purchased, and that the problems to be solved were namely to keep production going, and also decide what to do with the Cherry Lockbolts.

2. Henry Jones presented us with a list of the Cherry Lockbolts that had been purchased. Mr. Westrick was then contacted, and asked us to quote Henry Jones personally our best price and delivery for the same items that Convair had ordered from Cherry Rivet Division of the Townsend Company.

3. Henry Jones sent a wire to the Cherry Rivet Company asking for cancellation charges on the balance of the items on order from Cherry. That cancellation charge amounted to a little more than $13,000, which was almost the quoted value of the items that have been unshipped. Henry Jones indicated that he was planning to send a man to the Cherry Rivet Company in order to determine what basis Cherry had for such an outrageous cancellation charge.

4. Cherry had already delivered the equivalent of our ALPPN-T8-17 and -19. We were given a few sample Lockbolts which we drove in private with the CO-2 kit. The Cherry Lockbolts required between 90 and 98 pounds PSI line pressure in order to break the pins and the -19, Cherry Lockbolts heads pulled off in two out of three cases. The head popper condition occurred at about 95 PSI line pressure. We then repeated this demonstration in the office of Mr. Henry Jones in the presence of all those concerned [fol. 1099] with the Cherry Lockbolt situation at Convair. At that demonstration also, the Cherry heads popped off in about two out of every three we drove. To the best of our belief the Cherry Lockbolts were driven in flat plates

in non hole filling holes. And we, therefore, do not believe that there was any appreciable angularity presented to the head configuration upon driving. This demonstration was very effective in backing up the claims that we had made that it takes a great deal of know how to make Lockbolts, and that we have no confidence that the Cherry rivet division of Townsend has such know how.

5. We indicated strongly that our primary concern was the good name of the Huck Lockbolt, and that we feared for our reputation if Convair used, and had subsequent trouble with the Cherry Lockbolt. It was decided in effect that Convair would not purchase any more Lockbolts until the validity of our patents has been proved or disproved, unless we can not supply their requirements provided given reasonable lead time. If they found it necessary to purchase any more Cherry Lockbolts they would give us advance notice in writing. If they find it necessary to use the Cherry Lockbolts they have on hand or may at some time have on hand they will also advise us in writing at the same time sending us 50 samples of each part number for our examination and recommendations. They have however, reserved the right to use them irrespective of our recommendations. Based on the foregoing we will continue to sell Convair Lockbolt pins and Lockbolt collars.

Very best regards, Robert Looker.

mb

Sep. 17, 1951, Sales Dept.

[fol. 1100] IN THE UNITED STATES DISTRICT COURT FOR THE EASTERN DISTRICT OF MICHIGAN

GOVERNMENT'S EXHIBIT No. 25

Filed May 27 1953 Edmund L. Smith, Clerk By (illegible), Deputy Clerk.

George B. White, Mason & Graham, Collins Mason, William R. Graham, 811 West Seventh Street, Los Angeles 17, California, VAndike 2184, Attorneys for Defendant.

Mailed copy to: Lyon & Lyon, 811 W. 7th St., LA 17

IN THE UNITED STATES DISTRICT COURT, SOUTHERN DISTRICT OF CALIFORNIA, CENTRAL DIVISION

Civil Action No. 13,689-T

HUCK MANUFACTURING COMPANY, A MICHIGAN CORPORATION, Plaintiff,

vs.

TOWNSEND COMPANY, A PENNSYLVANIA CORPORATION, Defendant.

NOTICE OF APPEAL

Notice is Hereby Given that Townsend Company, a Pennsylvania corporation, the defendant above named, hereby appeals to the United States Court of Appeals for the Ninth Circuit from the final judgment entered herein on the 27th day of April, 1953, and from the order entered on the 25th day of May, 1953 denying defendant's motion for new trial herein filed on the 1st day of May, 1953.

Dated this 27th day of May, 1953.

Mason & Graham, Collins Mason, William R. Graham, George B. White, By Collins Mason, Attorneys for Defendants.

[fol. 1101] IN THE UNITED STATES DISTRICT COURT FOR THE EASTERN DISTRICT OF MICHIGAN

GOVERNMENT'S EXHIBIT No. 26

HUCK MANUFACTURING COMPANY
Departmental Correspondence

Date: February 3, 1953.

Subject: Request for Lockbolt License-The Townsend Company Armour, v Benkerf, Stern Reynolds, Westrick,

To: Dobbe, Van Hecke & Steele

From: Robert Looker.

Enclosed are copies of John Sterritt's letter of January 12, 1953, addressed to Mr. George B. White (Townsend Patent Attorney), Mr. F. R. Dickenson's (President of Townsend) letter of January 20, 1953, to John Sterritt and John Sterritt's letter of January 26, to the writer.

It is requested that the recipients of this memorandum give their thorough consideration to the latest proposal of the Townsend Company as expressed in Dickenson's letter of January 20. Although we have successfully weathered the threat of infringement and patent invalidity for the Lockbolt, Townsend still holds over our head the threat of appeal.

Probably more important than the threat of appeal is the threat of redevelopment so as to avoid our valid Lockbolt patents. Stubbornness and refusal to accept the defeat have already shown themselves quite clearly as characteristics of the Townsend Company, and in the event that they lose they appeal to the ninth circuit court their next course of action would logically be development of a Lockbolt type fastener which would avoid our patents and perhaps obsolete the Lockbolts which we have developed. We have no way of evaluating possibility of such a move, but considering many such like circumstances that is the primary threat which now faces us insofar as the Townsend Company is concerned.

It might be well to consider the possibility of drawing up an agreement with the Townsend Company to the effect that, if and when, we grant a license to another manufacturer we would grant Townsend a similar license. Such an agreement would be perhaps be acceptable to Townsend, and would give them an excuse to avoid the appeal as well as the necessity for developing a new Lockbolt type fastener. The above proposal is not in form of a recommendation, but is a suggestion which does bear some consideration.

The writer is planning to meet with John Sterritt, Thursday, February 5, and discuss pros and cons of different approaches to the problem. You will be advised fully as to the conclusions reached in our conference including a resume of the factors discussed.

Very best regards, Robert Looker.

RL:mb

[fol. 1102] IN THE UNITED STATES DISTRICT COURT FOR THE EASTERN DISTRICT OF MICHIGAN

GOVERNMENT'S EXHIBIT No. 27

Factors Relating to the Establishment of a Second Source for Huckbolt Manufacture by License Agreement

The following is a pro and con discussion relating to any Huckbolt license agreement which we now contemplate or may contemplate in the future and is noted herewith in response to Mr. A. W. Armour's request of May 3.

(Armour, Benkert, Dobbe, Reynolds, Stern, Looker)

I. Should a Huckbolt license and second source for Huckbolts be established at this time?

Factors For:

1. With a second source, labor negotiations would be facilitated.
2. It is felt that more than one source is required in order to develop a greater over-all market for the

Huckbolt fastener (i.e., two sources can sell more than twice as much as one source).

3. Royalty income should be of appreciable benefit without capital expenditure of this company.
4. Secondary sources may hasten the development and expansion of driving tool production and help lessen our greatest sales drawback, i.e., rivet driving tools.

Factors Against:

1. With patent infringement appeal not yet heard, there is a chance that any know-how information which we might transmit at this time could be used against us if the lower court's decision on patent validity and/or infringement were reversed.
2. The licensee's first customers would probably be our customers and we would suffer a dip in business until such time as the licensee could establish customers of their own which we could draw upon.
3. Unless there were some price restrictions keeping the licensee from selling appreciably below our published prices, we could suffer badly in competition because of our high labor rates, etc.
4. Poor Huckbolt manufacture could cause some trouble in the field and hurt the Huckbolt's reputation from an over-all standpoint.

II. What should be the requirements of our potential Huckbolt licensee?

1. A manufacturer equipped to produce Huckbolt pins and collars complete in diameters through ½" at least.
2. A fastener manufacturer who has a reputation and skill in producing fasteners in volume production to close tolerances.
3. A fastener manufacturer having a sales organization operating preferably in industries and locations where our coverage is not great.
4. A fastener manufacturer who utilizes ethical sales and business practices by practice and reputation.

[fol. 1103] III. Should the Townsend Company be considered for a Huckbolt license at this time?

Factors For:

1. Townsend already has considerable capital invested in the Huckbolt and it is possible that they will try, through re-development, to avoid patents which have been issued. We have been a thorn in their side and will continue to be so until they have the Huckbolt on the market.
2. Townsend has the threat of appeal held over our head and the possibility that our patents will, in the future, be declared invalid and/or not infringed by the present Townsend construction.

Factors Against:

1. If Townsend is licensed, the Huckbolt will probably be a product of the Cherry Rivet Division and their sales strength is in exactly the same areas where our sales strength lies. Consequently they will tend to merely take part of our business rather than establish their own.
2. We tend to quarrel with the Townsend Company and our old wounds and their old wounds have not healed. Such an atmosphere would not be healthy in these negotiations or practical considerations after the negotiations.
3. We have doubt as to Townsend's ability to manufacture the Huckbolt properly.
4. We have doubt as to Townsend's ability to effectively sell a specialized fastener like the Huckbolt as Townsend's sales are geared to conventional barnyard fasteners while the Cherry sales organization is almost totally integrated within Townsend with the exception of their West Coast aircraft sales which make up a very great portion of our Huckbolt business as you know.

Comments

Although I doubt if our granting a license will influence Townsend's decision to appeal the lower court decision in our patent infringement suit, it is somewhat probable that such a license would deter them from any continuing development to circumvent our patent protection.

Factors relating to general licensing, including the above, are shown in the attached memorandum from John Sterritt to Mr. Huck, dated February 21, 1951, while factors relating to the Townsend Company are expressed by Mr. Sterritt's letter of April 11, 1951, also attached to this memorandum.

The following points should be considered specifically in any license which we draw up:

a. The license should be non-exclusive and extend through the life of patents which are issued covering constructions or which will be issued in the future.

b. Improvements. We should get paid up licenses on improvements made by licensee with right to sublicense on such improvements for improvements falling under our claims or under claims subsequently issued.

[fol. 1104] c. Price maintenance. Although it is now legal to fix prices on patent licenses, if an entire industry is not so controlled by such price fixing, we have no assurance that such practices will be permitted in the future. If prices are fixed in the license agreement, the licensee automatically has the right to contest the validity of any patents so issued.

d. Suggested royalty clause—5% government sales, 7½% commercial sales.

e. Minimum royalties. As a general rule, non-exclusive licenses have lower minimum royalties which is ordinarily in a large amount. This could be established possibly for the first year between five and ten thousand dollars and for the second and each subsequent year somewhere between ten and twenty-five thousand dollars.

f. We do feel it important that the licensee be equipped to manufacture Huckbolts at least ½" in diameter for

a great portion of our unexplored market is within the larger diameter range.

It is felt that the actual decisions should be made by those concerned in our management and consequently the writer is refrained from making any specific recommendation at this writing.

Very best regards, R. Looker, May 4, 1954.

RL:rm

Sales Policies the same—FOB point etc.

[fol. 1105]

M. V. C.

APR 12 1951

A. W. A. III

APR 1[illegible] 1951

HARNESS, DICKEY & PIERCE
ATTORNEYS AND COUNSELLORS
GENERAL MOTORS BUILDING
DETROIT
2

J. RING HARNESS
ARTHUR W. DICKEY
PAUL F. SEIBOLD
CYRUS G. HINKLER
JOHN D. SCOFIELD
JOHN A. BLAIR
JOHN C. STERRITT
JOHN C. L. COWEN
DON K. HARNESS

ROBERT L. BOYNTON
JOHN L. STOUGHTON
JAMES V. SHERIDAN

EDWARD R. CASSELMAN
JOHN V. SOBESKY
PATENT SOLICITORS

HODGSON S. PIERCE
1927-1947

THOMAS J. NIENHAUS
1931-1948

TRinity 5-2300
CABLE ADDRESS
"HARNESS"

A. A.

APR 13 1951

April 11, 1951

Mr. A. W. Armour, III
Executive Vice President
Huck Manufacturing Co.
141 West Jackson Boulevard
Chicago 4, Illinois

Re: Proposed Lockbolt License to Townsend

Dear Mr. Armour:

It is premature and impractical to prepare a license draft at this time setting out in detail the license provisions that Huck might propose to Townsend. First, there should be an agreement in the Huck management on the terms that you will want and, secondly, those terms should be discussed with Townsend before any preliminary draft is made. The actual drafting of the license agreement after specific points have been agreed upon is not too difficult; but I do not feel that it would be to Huck's advantage to commit itself in any form until after a preliminary discussion with Townsend.

The two most important provisions in any patent license agreement are: A. the granting clause and B. the royalty clause. I have prepared an outline of various factors and proposals that should be considered by the Huck management under these two clauses and the unified position currently determined prior to the Townsend meeting.

A. Granting clause -

The two most important provisions in any patent license agreement are: A. the granting clause and B. the royalty clause. I have prepared an outline of various factors and proposals that should be considered by the Huck management under these two clauses and the unified position currently determined prior to the Townsend meeting.

A. Granting clause -

1. A straight, unrestricted, non-exclusive license to Townsend to manufacture, use and sell lockbolt constructions under the Huck patents.

2. The same as 1 plus a provision that Huck's improvements will be included.

3. The same as 1 plus an agreement that Huck will not grant licenses to others.

A-11

? not in writing - agreed for period of (3) yrs in writing

The effect of this would be to exclude all but Huck and Townsend. It would be more valuable to Townsend that 1 or 2, and would justify higher royalties and minimum guarantees.

4. The same as (1) 2, or 3, but excluding the "blind" lockbolt.

B. Royalty clause -

1. A straight royalty of X percent on all net sales.

2. A royalty of X percent on government sales, and a royalty of X plus percent on non-government sales.

3. The same as 1 or 2 plus a royalty of percent until a sum of $75,000 dollars has been paid on Y percent alone, to compensate Huck for ~~development and~~ pioneering sales expense (this would be well justified if number 3 of the granting clause were used).

4. A sliding scale royalty in which the percentage changed for different sales total brackets.

When this is used it usually provides for a decrease in the royalties as the sales increase, but it may be that you would be more interested in having a provision for an increased royalty as the sales increased in order to protect Huck's volume.

5. A requirement that minimum royalties be maintained either ~~(a) a flat figure as a definite obligation or~~ (b) a requirement that if certain royalty totals (either earned or unearned) are not paid, then the license may be terminated by Huck.

In connection with the percentages that you should ask for, this would be a negotiated figure, and ordinarily a royalty of 5% is considered a substantial one.

The license would also include a number of other provisions which are listed herebelow.

C. A provision relating to improvements on the lockbolt made by Townsend in which there would be either (1) ~~an assignment of such improvements to Huck~~ or (2) a license to Huck. Royalty free —

D. A provision for maintaining records and accounting of royalties, due either quarterly or semi-annually.

E. A price maintenance provision. This is a provision that I have previously written you about.

F. Termination provisions -

1. At any time upon 3 (non exclusive) month's notice by Townsend, with or without a provision that licensee would never test the validity of the patents. Provide for fulfillment of existing orders —

2. Upon breach by Townsend (such as failure to account or pay royalties) Huck may terminate upon notice, unless breach is cured.

G. Favored licensee clause -

A provision that if other licenses are granted by Huck on more favorable terms, Townsend would get the benefit of these terms.

H. A provision that Huck would sue other infringers. This is a provision that often brings controversy in a patent license agreement because the licensee usually insists upon it in order to justify his paying royalties and the licensor is usually reluctant to include it because he doesn't want to be in a position where he is forced into litigation. no - unless jointly by T + H

I. Other standard provisions, such as, termination by Huck in the event of bankruptcy of Townsend, provision for notice, representation of ownership and right to grant license by Huck; and provisions for transferability of the license by Huck and non-transferability of the license by Townsend except to a successor in business.

As you get into your negotiations there may be other special provisions that would develop, there usually are. It is hard to anticipate them at this stage.

511

In general, a patent license does not follow any particular form, and it can be shaped to fit practically any circumstances.

I am sending a copy of this letter to Mr. Adams, Mr. Huck, Mr. Stern, and Mr. Dobbe. I suggest that after you all have had an opportunity to consider these various factors, that we meet to discuss them as it is impossible for me to include in this letter a complete treatment of the effect of the different suggestions and I can amplify the various points at that time.

Very truly yours,

John C. Stenitt

JCS/ms

cc: Mr. Cyrus H. Adams
Mr. Louis C. Huck
Mr. Albert M. Stern.
Mr. Frank Dobbe

[fol. 1109]

HARNESS, DICKEY & PIERCE
ATTORNEYS AND COUNSELLORS
GENERAL MOTORS BUILDING
DETROIT

J. KING HARNESS
ARTHUR W. DICKEY
PAUL F. SEIBOLD
CYRUS G. MINNLER
JOHN D. SCOFIELD
JOHN A. BLAIR
JOHN C. STERRITT
JOHN C. L. COWEN
DON K. HARNESS
ROBERT L. BOYNTON
JOHN L. STOUGHTON
JAMES V. SHERIDAN
EDWARD R. CASSELMAN
JOHN V. SOBESKY
PATENT SOLICITORS

HODGSON S[illegible]RCE
1927-1947
THOMAS J. NIENHAUS
1931 1948

TRINITY 5-2300
CABLE ADDRESS
"HARNESS"

February 21, 1951

Mr. Louis C. Huck
Huck Manufacturing Co.
141 West Jackson Boulevard
Chicago 4, Illinois

Dear Mr. Huck:

Attached hereto are two copies of a memorandum that I have prepared regarding the Huck lockbolt patent situation. This memorandum is to summarize the various points that we have previously discussed in connection with these patents and the possible steps that might be taken to control Huck's exclusive position.

I will be glad to amplify or clarify any parts of the memorandum that you might wish. I believe that it might help us to crystalize our thoughts in preparation for the meeting with the Townsend people.

I will also send two copies of this memorandum to Mr. Armour.

Very truly yours,

John C. Stendt

JCS/ms
Encl.

513

J 2961

[fol. 1110] HUCK LOCKBOLT PATENT COVERAGE

The purpose of this memorandum is to summarize various factors involved in the Huck Lockbolt patent situation, and to set forth the effects of various steps that might be taken to maintain or control Huck's exclusive position.

Huck Patents Relating To Lockbolts

Huck owns five patents relating to its lockbolt constructions or the methods of using them.

Re-issue Patent No. 22,792 (Expires November 24, 1953) has method claims 38 to 42 inclusive which cover the method of setting the lockbolt. This patent would only be infringed by a user of the lockbolt and not by a manufacturer of the lockbolt components.

Patent No. 2,114,493 (Expires April 19, 1955) has three claims; namely, 10, 11, and 12, which are pertinent to the lockbolt coverage. This patent discloses a blind rivet and one of the limitations in the claims requires a *tubular portion* having a head at one end. Except for this reference to "a tubular portion" these claims would read directly on your lockbolt collar. I feel that these claims could reasonably be construed, under the doctrine of equivalence, to cover your lockbolt collar, because the reference to the tubular portion is really superfluous so far as defining the real invention that is disclosed in this patent. While this might be questionable, I feel that in the event this question were litigated, we would have a good chance of having this position sustained.

Recently issued Patents, No. 2,531,048 and No. 2,531,049, disclose and claim your lockbolt construction and claim a fastener for use in attaching together a plurality of members [fol. 1111] in which the pin is combined with the collar. These patents will expire November 21, 1967. They would be infringed by one who uses the lockbolt elements in applying them to the parts being held together, and they would not be directly infringed by one who manufactures the separate components and does not put them together. It is questionable whether an action could be maintained against one who only manufactured the components. However, there is a possibility that such an action could be maintained if it could be shown that such a component

manufacturer actually did use the elements in combination, as he might well do in his shop for demonstration purposes. To that extent the same thing may be true of re-issue Patent No. 22,792.

Huck Patent No. 2,527,307 has a claim directed to the method of setting a fastener where a plurality of successive grips and pulls are taken. This patent expires October 24, 1967. It would be directly infringed by a user following this method, but would not be infringed by a manufacturer of component parts. However, an action might be maintained on it if the method were used for demonstration or sales purposes by the manufacturer, as suggested above.

Steps That Have Already Been Taken To Notify The Public

1. The products that are manufactured and sold by Huck are marked with the patent numbers.

2. Letter notices of Huck's patent coverage have been sent to users, such as Wright-Patternson Air Base, Convair, Fairchild, and thirteen trailer manufacturers.

Present Business

At present most of the business is for the government in the aircraft field although there is some private commercial business which is developing.

[fol. 1112] Government Field

The authorities of Wright-Patterson Air Base have indicated that they will require two sources for all of their products. Under 28 U.S.C. 1698, the government may use any patent and acquire products from any sources without the patentee's permission, and the patentee's only recourse is by suit against the government in the Court of Claims to recover his entire and reasonable compensation for use of his patented product. The manufacturer or user of the infringing product cannot be sued or enjoined for the patent infringement, whether he be a prime or sub-contractor for the government, where the product he supplies ultimately goes to the government.

The government contracts usually require the contractor

to hold the government harmless for patent infringement, but that is a matter between them, and in the event of recovery against the government by the patentee, the government can go back to the contractor and collect. However, in practice that makes the contractor wary of patent infringement because he may have a substantial claim against him some years later, and contractors usually try to clear up their patent matters to avoid this future risk. But, the contractors and sub-contractors for the government can, under the law, refuse to recognize any patents and leave the patentee to his remedy against the government.

Private Commercial Field

In the private commercial field, action for infringement is directly against the infringer and damages may be recovered and injunctive relief may be obtained.

What Steps May Be Taken and Their Effect

1. Direct action may be taken against any infringer wherever possible by patent infringement suits. This [fol. 1113] would be the most direct and positive way of establishing or resolving Huck's exclusive position. Such as action is expensive both from the standpoint of attorney's fees and distraction of key personnel from their primary manufacturing and sales functions. While it is difficult to predict the cost in dollars of a hard-fought patent suit, by way of a general estimate, it would probably run $50,000 to $75,000. The distraction of certain of the key personnel is probably the most costly factor to the company because the preparation and trial of the case would require the time of these men over a considerable period.

Perhaps the biggest danger in such direct action is the risk of losing the patent infringement suit. I do not mean by this that I consider the Huck patents weak ones, because on the information that I have, I believe that they are valid within the scope of the claims. However, this risk is always a substantial one in patent litigation and the tendency of the courts is to be quite strict against the patentee. The effect of losing the patent suit would, of course, be a loss of the monopoly covering the lockbolt.

In determining whether a suit for patent infringement

should be brought, the question of laches must be considered. This is a proposition which requires a patentee to act promptly and assert any claim for infringement which he knowns about without unreasonable delay. If he fails to assert his patents and an infringer is led to believe that he doesn't intend to assert his patent rights, and as a result of that delay makes expenditures in enlarging or developing his business, the patentee may lose his patent rights, at least to the extent of being unable to recover damages from that particular infringer. The length of time within which a suit must be brought after knowledge of [fol. 1114] the infringement varies considerably in the reported cases and depends upon the particular circumstance in each case. In the case of Huck, I do not believe that we could safely delay for more than two years in bringing suit from the time of knowledge on our part that the patents are being infringed. Reports from the field on what a particular manufacturer intends to do would not be the basis of such knowledge, but are mere matters of rumor and speculation. There would be no infringement until a manufacturer actually manufactured and sold, or used, devices covered by the patents.

2. With this matter of laches in mind, another step that might be taken would be to grant the government a free license for the period of the present defense emergency, such license to be along the lines of the one that I have prepared, and be limited in time. This would relieve Huck of any charge of laches that might be made against it for that period, and to the extent of products manufactured for the government (Esnault-Pelteris v. Chance Vought Corporation, No. 4842, 56 F. (2d) 407). But with respect to the private commercial field, such a license to the government would not relieve Huck of the charge of laches to that extent.

It is also pointed out that such a free license to the government would not reflect to strengthen the patent on the basis of recognition by the industry.

Giving a free license would have the effect of releasing the government from any claims under the above referred to statute. With such a license the government might be encouraged to set up other manufacturing sources. However, it can do that now without the license and assume

the risk of being sued in the Court of Claims. (The government does this in vital instances, for example, the contracts to K.F. to build Fairchild cargo planes).

[fol. 1115] 3. Another step, and perhaps the most complicated one that might be taken, is to license either the owners or the manufacturers of the component parts. Licensing the users, such as the aircraft and trailer manufacturers, is probably too complicated a procedure to follow because of the large number of such people, and it would be difficult to set up and police. I believe that this suggestion can be eliminated from consideration because of the impracticability.

To license a manufacturer of the component parts would be practical from a set up and policing standpoint. It has more complications in other respects which will be discussed below.

One of the effects of licensing the manufacturer would be to eliminate the expenses and risks outlined in 1 above. It would tend to strengthen the patents by recognition. It would provide income from royalties and give Huck a competitive advantage to the extent of the royalties. The tax situation may effect the value of this last point.

If a license were granted to a manufacturer, it would be granted to someone either now in the business or to a new manufacturer. If it were granted to someone not now in the business, Huck would probably have to father the enterprise by teaching the licensees all of its know-how and give the new manufacturer the benefit of all of Huck's experience accumulated over the years. Under such circumstances Huck would probably also have to accept some responsibility for the product. These factors would be eliminated if someone who is already in the business were licensed.

The granting of a license would have the effect of diluting the exclusive advantages to Huck and might result in reducing the price, unless the license provides for price [fol. 1116] maintenance. This problem of fixing prices is a rather delicate one because of our anti-trust laws. Patentees may still fix the prices of their patented products under the doctrine set out in U.S. v. General Electric (272 U.S. 476) and U.S. v. Line Material Company (333 U.S. 287-363). The Line Material case is the most recent pro-

nouncement of the Supreme Court on this point and the court did not overrule the General Electric case. However, it was a close question because four judges wanted to overrule General Electric and four refused to do so, so that the doctrine still stands. If a license were entered into with a price fixing requirement, it should be kept in mind that the Supreme Court might hold such a contract invalid, although the law as it stands today permits it.

Also, in a license with a price fixing clause, the licensee may contest the validity of the patents. This would arise if the licensee refused to pay royalties and was sued by the licensor for recovery of the royalties. The licensee could contend, as a defense to his non-payment, that the patents were invalid.

If another were licensed under the Huck patent, the company would lose the advantage in a stock prospectus of being able to make the statement that the company was the exclusive manufacturer of a product. The value of being able to make such a statement can best be determined by advice from financial advisors. The company would still have the advantage of being able to state that it was manufacturing a patented product, and, if there was a licensee, there would be a settled condition in the field and the risks of costly litigation and of losing the patent monopoly would be eliminated, at least to the extent of the licensee.

[fol. 1117] A granting of licenses may have the effect of enlarging the use of the product due to the greater promotional activity of more than one company. The larger companies seem to like to have a choice of sources; and some of the large companies insist on it, for example, this is usual in the automotive industry.

If a manufacturer now in the business is not licensed, this manufacturer would be stimulated to avoid the patents by designing non-infringing devices. The patents in question are limited in scope because there are many prior types of fasteners. Given time, I believe that an alert manufacturer would succeed in designing non-infringing and yet competitive products.

To grant a license would probably satisfy the government's requirements of more than one source and limit those in the business to Huck and a licensee. While it might be possible at this time to license a manufacturer for

government use only, due to the present high demands, once the manufacturer is in business, he would be difficult to get out and would probably resist all such efforts even to the point of defying the patents. I believe that this would be equally true if such a manufacturer were only operating under a free license to the government for the emergency period.

These various points discussed above may be amplified and other factors added upon further consideration of this problem as it develops.

J. C. Sterritt.

February 21, 1951.

JCS/ms

[fol. 1118] IN THE UNITED STATES DISTRICT COURT FOR THE EASTERN DISTRICT OF MICHIGAN

GOVERNMENT'S EXHIBIT No. 28

HUCK MANUFACTURING COMPANY
Departmental Correspondence

Date: May 5, 1954.

Subject: Discussion on Lockbolt Patent License

To: A. W. Armour

From: R. Looker

Copies: A. E. Benkert, F. A. Dobbe, H. Brilmyer, J. Orloff, A. Stern, J. Sterritt, P. Reynolds, File

The following is a quick resume of points relating to future discussion for a lockbolt license.

I. We should proceed with issuing a lockbolt license.

II. We should offer a lockbolt license to Townsend under the following general conditions:

A. That Townsend agree to manufacture and make available to industry lockbolts 5/16" in diameter through at least 5/8". (1/2 → Research on 5/8 to be done later.

B. That lockbolts be manufactured and distributed by Townsend—not Cherry.
C. That lockbolts and collars be suitably identified to prevent field mixing.
D. That the license be cancellable if Townsend inferior quality hurts Huck.
E. That Huck give Townsend manufacturing drawings and specifications for lockbolts and collars.
F. License to be non-exclusive.
G. Royalties. Commercial business-7-½%. Aircraft-5%.
H. That we should determine Townsend's machinery and equipment now available for lockbolt manufacture on through ⅝" in diamtetr.

III. Points not fully discussed.

A. Should Townsend sell Huckbolts.
B. Price maintenance provisons.
C. Minimum royalties.
D. Improvements. (Clause)
E. Termination. (Life of patent)
F. Favored license clause.
G.

Very best regards, R. Looker.

RL:rm

Meeting John Sterritt 5-6-54.

[fol. 1119] IN THE UNITED STATES DISTRICT COURT FOR THE EASTERN DISTRICT OF MICHIGAN

GOVERNMENT'S EXHIBIT No. 30

HUCK MANUFACTURING COMPANY
Departmental Correspondence

Date: June 23, 1954

Subject: Townsend Company

To: A. W. Armour and A. E. Benkert

From: R. Looker

Copies: Sterritt, File

As you know, I met with John Sterritt Tuesday last to discuss the Townsend and Illinois Tool agreements. John's final draft of June 22 on the Townsend agreement appears to be the final draft and he will be ready to send same along to Johnson just as soon as he gets concurrence from us.

I have read the agreement over and it appears to be very good and most favorable for both Townsend and Huck. If we may have your concurrence, we would like to proceed.

Very best regards, R. Looker.

RL:rm

Attention of: J. C. S.

Received Jun 25 1954, Harness, Dickey & Pierce, Detroit, Mich.

[fol. 1120] IN THE UNITED STATES DISTRICT COURT FOR THE EASTERN DISTRICT OF MICHIGAN

GOVERNMENT'S EXHIBIT No. 33

Filed September 20 1954, Paul P. O'Brien, Clerk.

[Seal] A True copy, Attest: Feb 4, 1963, Frank H. Smith,

George B. White, 712 Grant Building, 1095 Market Street, San Francisco 3, California. Telephone: Market 1-7065.

Mason & Graham, Collins Mason, 811 West Seventh Street, Los Angeles 17, California, Telephone: VAndike 2184, Attorneys for Appellant.

UNITED STATES COURT OF APPEALS FOR THE NINTH CIRCUIT

No. 13943

TOWNSEND COMPANY, Appellant,

vs.

HUCK MANUFACTURING COMPANY, Appellee.

Stipulation To Dismiss

Appellant and Appellee in the above entitled appeal, by their respective attorneys, hereby agree and stipulate that the above appeal be dismissed without costs to either party, both with respect to Appeal costs and District Court costs, and that the Hon. Clerk of the above Court enter the above appeal dismissed.

Dated: September 17, 1954.

Harness, Dickey & Pierce John C. Sterritt, Lyon & Lyon.

By William W. Dickey John C. Sterritt Attorneys for Appellee.

George B. White, Mason & Graham.

By George B. White, Attorneys for Appellant.

[fol. 1121] No. 13943

TOWNSEND COMPANY, Appellant,

vs.

HUCK MANUFACTURING COMPANY, Appellee.

I, Frank H. Schmid, as Clerk of the United States Court of Appeals for the Ninth Circuit, do hereby certify pursuant to the foregoing stipulation to dismiss appeal and rule 14 of this Court the appeal in above cause was entered dismissed on the files of this Court, September 20, 1954.

Frank H. Schmid, Clerk.

[fol. 1122] IN THE UNITED STATES DISTRICT COURT FOR THE EASTERN DISTRICT OF MICHIGAN

GOVERNMENT'S EXHIBIT No. 34

cc: Armour, Benkert, C. Armour, Westrick, File.

April 20, 1956.

Mr. Paul Horst,
Assistant to the President,
The Townsend Company,
New Brighton, Pennsylvania.

Dear Paul:

I wish to thank you for the many courtesies extended during our very pleasant visit to New Brighton earlier this week. Your hospitality was certainly appreciated and we certainly appreciate the opportunity also of working with your organization more socially in some of our common problems.

There is one point just brought to my attention concerning the pricing of our aircraft Huckbolts which I think you might wish to look into. When we offer the aircraft Huckbolt for sale to the Navy Department, Bureau of Aeronautics, central purchasing in Philadelpria, we have a

packaging charge to package the parts in accordance with Government specifications. This is overseas type packing and is fairly detailed. You may have been or may be asked to do the same and our prices are 60¢ per box for the 3/16", 80¢ per box for the 1/4", $1.00 per box for the 5/16", and $1.20 per box for the 3/8".

For example, if they want the 1/4" aircraft Huckbolt, 100 pieces per box, we charge $8.00 per thousand extra; and if they want 25 pieces per box, we charge $32.00 per thousand extra.

Again many thanks for your hospitality.

Very sincerely yours. Huck Manufacturing Company,

Robert Looker, Vice President in Charge of Sales.

RL:mb

[fol. 1123] IN THE UNITED STATES DISTRICT COURT FOR THE EASTERN DISTRICT OF MICHIGAN

GOVERNMENT'S EXHIBIT No. 34A

HUCK MANUFACTURING COMPANY
Specialists in Cold Heading Riveting and
Fastening Processes
2480 Bellevue Avenue
Detroit 7, Michigan

cc: Armour✓, Benkert, C. Armour, Braund, Westrick, File.

April 20, 1956.

Mr. Paul Horst,
Assistant to the President,
The Townsend Company,
New Brighton, Pennsylvania.

Dear Paul:

I wish to thank you for the many courtesies extended during our very pleasant visit to New Brighton earlier this week. Your hospitality was certainly appreciated and

we certainly appreciate the opportunity also of working with your organization more socially in some of our common problems.

There is one point just brought to my attention concerning the pricing of our aircraft Huckbolts which I think you might wish to look into. When we offer the aircraft Huckbolt for sale to the Navy Department, Bureau of Aeronautics, central purchasing in Philadelphia, we have a packaging charge to package the parts in accordance with Government specifications. This is overseas type packing and is fairly detailed. You may have been or may be asked to do the same and our prices are 60¢ per box for the 3/16", 80¢ per box for the 1/4", $1.00 per box for the 5/16", and $1.20 per box for the 3/8".

For example, if they want the 1/4" aircraft Huckbolt, 100 pieces per box, we charge $8.00 per thousand extra; and if they want 25 pieces per box, we charge $32.00 per thousand extra.

Again many thanks for your hospitality.

Very sincerely yours, Huck Manufacturing Company,

Robert Looker, Vice President in Charge of Sales.

RL:mb

[fol. 1124] IN THE UNITED STATES DISTRICT COURT FOR THE EASTERN DISTRICT OF MICHIGAN

GOVERNMENT'S EXHIBIT No. 35

May 9, 1956.

Mr. Paul Horst,
Assistant to the President,
Townsend Company,
New Brighton, Pennsylvania.

Dear Paul:

We have a temporary condition where certain of our aircraft companies are using an electrofilm with collars and have no need for color anodizing with collar so treated. We hope to be able to kill this with our new lubricant which we are working on but for the interim period have established collar prices for the 2024 aluminum alloy both the present color anodized and nonanodized and both with and without electrofilm. A copy of this tabulation showing all of the possible variations is attached hereto, and we would like to ask that the prices be adhered to in accordance with our existing agreement.

The summary made is to prevent any misunderstanding which may exist.

Very best regards, Huck Manufacturing Company,

Robert Looker, Vice President in Charge of Sales.

RL:mb

Encl.

cc: Mr. Fred Dickerson, Mr. H. E. Chilcoat, Mr. Armour, Mr. Benkert, File✓

[fol. 1125]

Huckbolt 2024 Collar Prices

Effective April 9, 1956

		Under 1000	1 M 5 M	5 M 10 M	10 M 25 M	25 M 50 M	50 M 100 M	100 M & Over
LC–C6	Eastern	6.50	12.85	8.25	7.65	7.30	7.20	7.15
6LC–C6	Eastern Plain Anodized (No Color)	6.45	12.20	7.60	7.00	6.65	6.55	6.50
	Western	6.70	13.20	8.50	7.90	7.50	7.40	7.35
	Western & Electrofilm	7.60	14.10	9.40	8.80	8.40	8.10	8.15
	Western Plain Anodized (No Color)	6.65	12.55	7.85	7.20	6.85	6.75	6.70
	Western Plain Anodized & Electrofilm	7.55	13.45	8.75	8.10	7.75	7.45	7.40
LC–C8	Eastern	6.80	15.95	11.35	10.75	10.40	10.30	10.25
6LC–C8	Eastern Plain Anodized (No Color)	6.70	14.70	10.10	9.50	9.15	9.05	9.00
	Western	7.00	16.40	11.70	11.05	10.70	10.60	10.55
	Western & Electrofilm	8.25	17.65	12.95	12.30	11.95	11.60	11.55
	Western Plain Anodized (No Color)	6.90	15.15	10.40	9.80	9.40	9.30	9.25
	Western Plain Anodized & Electrofilm	8.15	16.40	11.65	11.05	10.65	10.30	10.25
LC–C10	Eastern	7.40	22.20	17.60	17.00	16.65	16.55	16.50
6LC–C10	Eastern Plain Anodized (No Color)	7.25	20.55	15.95	15.35	15.00	14.90	14.85
	Western	7.60	22.85	18.10	17.50	17.15	17.05	17.00
	Western & Electrofilm	10.05	25.30	20.55	19.95	19.60	19.05	19.00
	Western Plain Anodized (No Color)	7.45	21.15	16.45	15.80	15.45	15.35	15.30
	Western Plain Anodized & Electrofilm	9.90	23.60	18.90	18.25	17.90	17.35	17.30
LC–C12	Eastern	8.00	28.05	23.45	22.85	22.50	22.40	22.35
6LC–C12	Eastern Plain Anodized (No Color)	7.80	25.70	21.10	20.50	20.15	20.05	20.00
	Western	8.25	28.90	24.15	23.50	23.20	23.05	23.00
	Western & Electrofilm	11.80	32.45	27.70	27.05	26.75	26.60	26.55
	Western Plain Anodized (No Color)	8.05	26.45	21.75	21.10	20.75	20.65	20.60
	Western Plain Anodized & Electrofilm	11.60	30.00	25.30	24.65	24.30	24.20	24.15

[fol. 1126] IN THE UNITED STATES DISTRICT COURT FOR THE EASTERN DISTRICT OF MICHIGAN

GOVERNMENT'S EXHIBIT No. 36

HUCK MANUFACTURING COMPANY
Departmental Correspondence

Date: May 11, 1956.

Subject: Lockheed, Marietta—Your Memo of May 10, 1956.

To: Mr. Westrick.

From: Robert Looker.

Copies: Armour, Benkert, DeLoach, Albritton, Pelletier, Braund and File√

In reply to the subject memo, I contacted Paul Horst on the matter of packaging and he has indicated to me that he will make it clearly understood to the Cherry Rivet Division immediately that they are to offer packaging to aircraft companies just exactly the way we offer packaging as expressed in the copy of your teletype to Mr. Luke on the first page of the subject memorandum. He indicated that it could be possible that some deviation from this expressed policy might have been made by the Cherry Rivet Division of Townsend in lieu of any better information but that the latest up-to-date information on packaging has been sent to Townsend and that we should hear no further from difficulties of this type.

I also brought up the deal mentioned on the second page for inter-company grouping, and he definitely agreed that this is something that would be completely out of the picture and that they would not allow and that he will make certain that the Cherry Rivet Division understands.

Many thanks for your very complete report. I do think that the situation is now in hand.

Very best regards, Robert Looker.

RL:mb

[fol. 1127] HUCK MANUFACTURING COMPANY
Departmental Correspondence.

Date: May 10, 1956.

Subject: Lockheed Aircraft Corporation, Marietta, Georgia.

To: R. Looker.

From: W. J. Westrick.

Copies: Mr. A. W. Armour, Mr. A. E. Benkert, Representative, Mr. Albritton, Mr. Pelletier, Mr. Braund.

Recently, Mr. H. Luke, Buyer at Lockheed, Marietta, requested quotations on several items of Aircraft Huckbolt Pins, Stumps and Collars of 3/16", 1/4", 5/16" and 3/8" Diameters packaged in quantities varying from 100, 200, 400, 500, 800 and 1,000 pieces each package. The total quantities of such items varied from 1,000 to 3,000,000 pieces and in no instance did the quantity desired exceed 1,000 pieces per package.

We teletyped Mr. Luke the following on 5/4/56:

> "At No Extra Cost, Packaging of Huckbolt Aircraft Pins Now Available to Customers Desiring Lighter and Smaller Quantity Packages Than Heretofore Bulk Packaging. Huckbolt Aircraft Pins Now Packaged in 30 Pounds Approximate Maximum Weight Packages. The Quantity of Each Package May Vary From 100 Pieces Minimum to 2,000 Pieces Maximum Per Package Because of Size and Weight Variations. Huckbolt Aircraft Collars Available in 10,000 Piece Maximum Packages on Less, Again Because of Weight and Size Variations. Customers Desiring Huck Packaging Should Indicate Their Desire in the Original Entry of Their Purchase Order Whether Entered by Telephone, Wire, Teletype, or any Other Means, Otherwise We Reserve the Option of Furnishing Either Bulk Packaging or Huck Packaging. Standard Approved Cartons For Domestic Package Shipment and Standard Huck Labels Will be Utilized. Huck Packaging Has Been Included on Your

Inquiries HL-1055 and HL-1067 and Our Applicable Quotations."

Signed: W. J. Westrick.

On 5/10/56 Mr. Luke telephoned us stating his dissatisfaction with our packaging policy as expressed in our teletype of 5/4/56. He stated that since receiving our teletype he called Townsend in on the problem and Townsend agreed to package in *any quantity* desired by Lockheed at no extra charge. Mr. Luke further stated that Townsend have been packaging collars in 1,000 piece packages as standard policy for quite some time.

[fol. 1128] In the same conversation we were approached with the idea of splitting orders with Townsend and applying the unit price as determined by their total requirement with the understanding that we would get 50% and Townsend 50% but each price to be based on the total quantity of the two orders.

Example: Let's assume Lockheed required 100,000 pieces ALPPH-T6-4. They would submit their inquiry for 100,000 pieces to Huck and Townsend and we would base our quoted price on 10,000 pieces. The order to us emanating from this quotation would be for only 50,000 pieces and they would expect the quoted 100,000 piece price. The balance of the 50,000 pieces would be ordered from Townsend on the same basis.

I asked Mr. Luke point blank if Townsend had proposed such a pricing policy. He was reluctant to answer directly and intimated that such was the case *but did not admit it directly.*

This memo will be followed by a long report from Frank DeLoach as Lockheed was in conference with Frank DeLoach for 3 hours on 5/9/56 at which time he was told about how hard it was to do business with Huck as compared to Townsend.

The writer did not make any comment on the packaging situation because of the seriousness of this matter, except to state that this was a Company policy which required further study.

Relative to the pricing policy, I informed Mr. Luke that

Huck was not a subsidiary of Townsend or vice versa and consequently could not group prices with Townsend or act in any other manner with Townsend which may be interpreted or inferenced as collusion.

Bob, this situation as expressed by Mr. Luke is very hot. Either he is giving us a long story and matching it to Townsend or else Townsend are propositioning Luke with ideas which he likes and which are not in our sales policies.

I recommend that you have this situation investigated at once to see just "what goes."

W.J.W. May 11, 1956.

WJW:et

[fol. 1129] IN THE UNITED STATES DISTRICT COURT FOR THE EASTERN DISTRICT OF MICHIGAN

GOVERNMENT'S EXHIBIT No. 37

HUCK MANUFACTURING COMPANY
Departmental Correspondence

Date: May 21, 1956.

Subject: Lockheed, Marietta—Your May 9, 1956 Contact Report.

To: DeLoach.

From: Robert Looker.

Copies: Listed Below.

In reply to your memo of May 9, 1956, we will, of course, be very willing to write Hardy Luke a letter but would propose the following and ask that you review it and give it your comments before we actually send it along.

On packaging I do not believe we are as far apart as indicated. As you know, we have some 3/8" steel aircraft Huckbolts that weigh up to 100 pounds per thousand, and in order to keep the 30 pound maximum, we must some times go beneath the 1000 increment. Additionally, we ask for the privilege of shipping in 100 piece increments

in case the situation arises where Lockheed wants some fasteners which we have on the shelf but already packaged in 100 pieces per box. It would mean that this would not create any problem on the part of Lockheed, and we would like to ask for a continuation of this privilege.

The 30 pound maximum per box figure was arrived at in a negotiation with Lockheed, Burbank, and our entire fastener packaging program is built around this 30 pound maximum. To change to 20 pounds maximum per package would create an extreme hardship on our Production Department, and we would like to negotiate this with Hardy giving us the maximum of 30 pounds.

Just between us two, Cherry will go along with our identical policy so it might be necessary to hold Luke's hand for a week or so until he gets the full story out of Cherry.

On quotations when we quote one week after receipt of order, that means shipping date from our factory. The one week can mean either from stock or from materials which are just going into stock that is coming through plating and lubrication, etc.

When we say one week we mean that to be a maximum figure if it is in stock and we understand that Cherry takes a week to get their orders through in paper work, and consequently cannot do any better. If Cherry quotes stock they will make shipments in probably about one week after they get the order.

The matter of behind schedule orders and the prepaid air shipment will have to be taken under advisement before we can give you any clue on what attitude we might have. First I am going to get in touch with the Townsend Company and determine if this can be stopped which will [fol. 1130] save us both a lot of money. In lieu of having any prepaid freight system in effect now, I do not believe there is a place for either Cherry or Huck to ship a late order via air express prepaid, but, of course, we must act together on this matter.

I have already taken the matter of split quantities up with Townsend and they will not go along with the deal, neither will we, of splitting quantities with two vendors and asking for the lowest price from each.

I would like to ask that you give consideration to the

following stands which I would propose with Lockheed, Marietta, and give us your reply very soon so that we can get the letter out.

I will take up the matter of the SAL tests specimens with you in a separate memorandum and George Van Hecke has been asked to handle the nose assembly requests.

Very best regards, Robert Looker.

RL:mb

cc: Armour, C. Armour, Benkert, Brilmyer, Albritton, Murphy, Pelletier, Westrick, File √

[fol. 1131] IN THE UNITED STATES DISTRICT COURT FOR THE EASTERN DISTRICT OF MICHIGAN

GOVERNMENT'S EXHIBIT No. 38

July 3, 1956.

Mr. Paul Horst, President,
Townsend Company,
New Brighton, Pennsylvania.

Dear Paul:

I understand from our Atlanta representative that your Cherry Division offers prepaid premium shipments when they are behind schedule which is a little stiff competition and gives them a competitive edge which we do not enjoy.

I wondered if you would look into this in view of our price equalization agreement.

Very sincerely yours, Huck Manufacturing Company,
Robert Looker.

RL:mb

cc: Armour, C. Armour, Benkert, F. DeLoach, File.

[fol. 1132] IN THE UNITED STATES DISTRICT COURT FOR THE EASTERN DISTRICT OF MICHIGAN

GOVERNMENT'S EXHIBIT No. 39

HUCK MANUFACTURING COMPANY
Departmental Correspondence

Date July 3, 1956.

Subject: Lockheed, Marietta—Your Memo of June 16, 1956.

To: Frank DeLoach.

From: Robert Looker.

Copies: Armour, C. Armour, Benkert and File✓

In reply to your subject memorandum, I first want to thank you for the very complete comprehensive report on the request of Hardy Luke and your analysis.

We have gone back to the Townsend Company asking them to stop their premium shipments for behind schedule orders and this should be cleared up very shortly.

The last sentence of your memorandum read "If I might be of further service to you please notify me."

I think the thing to do here is to try to keep on the best side of Hardy Luke by any and all means that are possible and ethical.

I am sure you can do it and that we will hold the business you have gained so painfully.

Very best regards, Robert Looker.

RL:mb

[fol. 1133] IN THE UNITED STATES DISTRICT COURT FOR THE EASTERN DISTRICT OF MICHIGAN

GOVERNMENT'S EXHIBIT No. 40

July 3, 1956.

Mr. Paul Horst,
Assistant to the President,
Townsend Company,
New Brighton, Pennsylvania.

Dear Paul:

Our Buffalo representative reports that you have permitted grouping of non-standard commercial Huckbolts (about grip 23 or 24) with short standard grips. This report comes from a Mr. Stutz, Shop Superintendent of Niagra Blower Company.

We only permit grouping of the part numbers shown in the price list and we would like to ask that you do likewise.

Could we hear from you in this regard.

Very sincerely yours, Huck Manufacturing Company,
Robert Looker.

RL:mb

cc: Armour, C. Armour, Benkert, Mathews, Egnot, File.

[fol. 1134] IN THE UNITED STATES DISTRICT COURT FOR THE EASTERN DISTRICT OF MICHIGAN

GOVERNMENT'S EXHIBIT No. 41

HUCK MANUFACTURING COMPANY
Departmental Correspondence

Date December 12, 1955.

Subject: Freight Equalization.

To: Mr. A. E. Benkert.

From: R. Looker.

Copies: Armour, Mathews, Pelletier, File√.

Further to my memorandum of November 17, 1955, on the above subject, I called Paul Horst this AM, and he confirmed that Townsend Company, is willing to proceed on a Freight Equalization basis, and that he will confirm this by letter sometime later this week.

Consequently, our burden, therefore, is to set up a Freight Department as stated in the memorandum of November 17, and place this plan into effect at the earliest date. I told Paul Horst that, pending the review of this matter by our superiors, we would shoot for the 1st of March for the effective set up of Freight Equalization with New Brighton, giving the Townsend Company the privilege of equalizing freight with Detroit for Commercial Huckbolts.

Very best regards, Robert Looker.

RL:by

[fol. 1135] IN THE UNITED STATES DISTRICT COURT FOR THE EASTERN DISTRICT OF MICHIGAN

GOVERNMENT'S EXHIBIT No. 42

December 27, 1955.

Mr. H. E. Chilcoat,
Vice President & General Sales Manager,
Cherry Rivet Division,
The Townsend Company,
Santa Ana, California.

Dear Mr. Chilcoat:

I would like to thank you for the many courtesies extended to Milt Miner and to myself during our very pleasant visit with you last week.

The matter of Huckbolt price maintenance and shipping point is, of course, being given further consideration here, although no mutually acceptable decision has been reached.

If you recall I told you about a report from our Fort Worth, Texas, representative, Mr. Charles O. Unfried, relative to the activities of the Standard Parts & Equipment Company of Fort Worth, on the Lockbolt sale in that area.

The memorandum which I mentioned will be paraphrased as follows:

Mr. Unfried reports that Standard Parts & Equipment Company have adopted the policy of quoting unit price lower than Huck, but not to the extent that the delivered price is lower than Huck. If this is true, I believe that they are operating outside of the terms of our agreement, which is that The Townsend Company will sell Lockbolts, F.O.B. Santa Ana, California, or F.O.B. New Brighton, Pennsylvania, at published list prices and not at prices lower than published list.

We also understand that Standard Parts & Equipment Company have informed all major airframe manufacturers in the Texas and Oklahoma area that they were going to stock Lockbolts and collars, and have them available for immediate delivery, and that they promised to have such stock in operation by January, 1956.

I believe that this is outside of the frame work of your plans as indicated to me during our meeting.

[fol. 1136] Insofar as the lower prices are concerned, I will quote directly from Mr. Unfried's memorandum to me.

> "Cherry is quoting a lower price for the Lockbolts than Huck on all quotations. However, the freight point listed on both are F.O.B., each plant. The freight is more from California than it is from Detroit, which makes the delivered price about the same, but the buyers can justify giving the orders to Cherry, at a lower cost, accordingly to the quotation. This one point is being pressed by SP & E to all buyers, as a reason to give them the orders along with the local stock deliveries".

I sincerely hope that you take an early opportunity to look into the above mentioned situation, as it appears to be serious to us, and one which should be corrected, if need be.

Again many thanks for the many courtesies extended during our pleasant meeting.

Very sincerely yours, Huck Manufacturing Company, Robert Looker, Vice President in Charge of Sales.

RL/by

cc: Armour, Benkert, Miner, Unfried, File.

[fol. 1137] IN THE UNITED STATES DISTRICT COURT FOR THE EASTERN DISTRICT OF MICHIGAN

GOVERNMENT'S EXHIBIT No. 43

Mr. Armour, A. W. A. III, February 2, 1956

TOWNSEND COMPANY
New Brighton, Pennsylvania

January 20, 1956.

Mr. Robert Looker,
Vice President in Charge of Sales,
Huck Manufacturing Company,
2840 Bellevue Avenue,
Detroit 7, Michigan,

Dear Bob:

I apologize for not replying at an earlier date to your letter of December 27. The fact is that I have been out of town most of the time for the past several weeks.

Essentially this will confirm what I stated to you when you were here regarding Standard Parts & Equipment at Fort Worth. You have quoted Mr. Unfried's report that "Standard Parts & Equipment Company have adopted the policy of quoting unit price lower than Huck but not to the extent that the delivered price is lower than Huck." May I emphasize that Standard Parts is not at liberty to adopt any policy that in the slightest degree conflicts with the policy of the Townsend Company. Our policy under the terms of the License Agreement is to quote unit prices exactly in accordance with your published prices f.o.b. Santa Ana or New Brighton with freight equalized with Detroit or Los Angeles, depending upon destination. As you can see, this must result in a delivered price identical with your delivered price.

Standard Parts has been our distributor for many years and our experience has been that they operate uniformly in accordance with our policies on all products they handle for us. As to stocking, it is my understanding that we have [fol. 1138] made no commitments as to where we may eventually stock pins and collars, but up to now Standard Parts

has carried no stock. In fact, their sales to date of both pins and collars have been negligible.

We enjoyed your visit here and will look forward to seeing you again any time you are in this area.

Very truly ours, Townsend Company, H. E. Chilcoat, Vice President.

HEC:mp

[fol. 1139] IN THE UNITED STATES DISTRICT COURT FOR THE EASTERN DISTRICT OF MICHIGAN

GOVERNMENT'S EXHIBIT No. 44

HUCK MANUFACTURING COMPANY
Departmental Correspondence

Date December 27, 1955.

Subject: Freight Equalization with the Townsend Company.

To: Mr. Armour.

Copies: Messrs. Benkert, Mathews, Pelletier, Reynolds and File.

From: Robert Looker.

Paul Horst called me yesterday, December 21, to advise that Dickinson is still holding out for prepaid freight, and that he does not feel that freight equalization is a basis for a satisfactory solution to the freight problem. I believe that this subject has become now important enough to us to necessitate a meeting with Mr. Dickinson, himself, so that we can arrive at some suitable arrangement.

He will, of course, go along with the freight equalization for the balance of the two year period, for we are in a position, of course, to dictate his actions during that time.

I suggest that we make this a topic of discussion during one of your early trips to Detroit.

Very sincerely yours, Robert Looker.

RL:mb

[fol. 1140] IN THE UNITED STATES DISTRICT COURT FOR THE EASTERN DISTRICT OF MICHIGAN

GOVERNMENT'S EXHIBIT No. 45

HUCK MANUFACTURING COMPANY
Departmental Correspondence

Date March 1. 1956.

Subject: Visit From The Townsend Company—Mr. Paul Horst and Mr. George Bentley.

To: Mr. Armour.

From: Robert Looker.

Copies: Messrs. Benkert, Pelletier and File.

This memorandum will confirm certain points discussed during our meeting with Paul Horst and George Bentley of the Townsend Company, Wednesday, February 8, 1956.

At that meeting we reiterated the fact that we thought that prepaid freight on Huckbolts is a complete waste of money and that if there were any freight difficulties between Huck and Townsend, we should reserve the right to equalize freight with each other and not go to freight allowances or prepaid freight.

I believe that Dickinson feels that the freight allowance or prepaid freight is necessary to sell Lockbolts but we made the very strong claim that it is not and witnessed of present sales and rate of growth as firm reasons why it is not.

Paul Horst, on the other hand, I believe, believes in freight equalization; and I sincerely hope he will take this story back to Dickinson so that we can get a decision at an early date.

Very best regards, Robert Looker.

RL:mb

It was agreed to go along as we are at present—.

[fol. 1141] IN THE UNITED STATES DISTRICT COURT FOR THE EASTERN DISTRICT OF MICHIGAN

GOVERNMENT'S EXHIBIT No. 47

HUCK MANUFACTURING COMPANY
Departmental Correspondence

April 4, 1956.

Subject: Trip Itinerary.

To: Mr. Benkert.

From: Robert Looker.

Copies: Armour, Mathews and File.

George Mathews and I are planning to meet with Paul Horst and Mr. Wade Briceland, the Townsend Traffic Department Manager, on April 16 and Apri 17 if necessary in order to thrash out the details of freight equalization for a mutually acceptable proposal.

We will be at the Roosevelt Hotel on the evening of April 16.

Very best regards, Robert Looker.

RL:mb

[fol. 1142] IN THE UNITED STATES DISTRICT COURT FOR THE EASTERN DISTRICT OF MICHIGAN

GOVERNMENT'S EXHIBIT No. 48

HUCK MANUFACTURING COMPANY
Departmental Correspondence

Date: October 15, 1954.

Subject: Townsend Company—Conference of October 14.

To: A. W. Armour.

From: R. Looker.

Copies: Benkert, Pelletier, Sterritt, File.

One major point was brought up during our marketing conference with Townsend October 14, and that is concerning prices for specials. We will have to establish some type of pricing policy for items for which there is no established list price so that we do not find ourselves in the position of quoting on a special wherein Townsend is also quoting on a special at a lower price.

During our discussion, the point was made that our license did not include the stump and that if the stump were to be included, a separate license would have to be written based upon know-how. I would like to suggest that we proceed immediately with this license and I do believe that Townsend would be willing to have the second license included so that they could have a rounded line such as ours, making the same parts and insuring our complete cooperation for the entire line. (Yes.)

Very best regards, R. Looker.

RL:rm

[fol. 1143] IN THE UNITED STATES DISTRICT COURT FOR THE EASTERN DISTRICT OF MICHIGAN

GOVERNMENT'S EXHIBIT No. 50

HUCK MANUFACTURING COMPANY
Departmental Correspondence

Date: February 15, 1955

Subject: AL-ALS Price Increase

To: All Product Engineers

From: M. E. Welch, Jr.

Copies: Armour, Benkert, Benard, Looker,✓ Mathews, Pelletier, Cianfarani, Serra, Welch, Westrick, Higgins, Smoot Van Hecke, Rowse, Vercellone, Dobbe, File.

Attached is copy of letter sent to all customers regarding the 9% AL-ALS price increase.

While customers and all Product Engineers will be supplied with new price sheets as soon as printed, the old sheets may be used in the meantime by adding 9% to the charges therein.

Very best regards, M. E. Welch, Jr.

MEW:by

To: Adams, Jones, Miller, Clute, DeLoach, Corry, Frescoln, Hanneman, Houston, Hunt, Martin, Mather, Miner, Myrick, Crook, Huegin, Morgan-3, Buehring, Sarno, Proffitt-2, Salogga, Strothen, Thomson, Gillespie, Thone, Turney, Upton, Unfried, Villacres, Wilgus.

[fol. 1144] HUCK MANUFACTURING COMPANY
2480 Bellevue Avenue
Detroit 7, Michigan

February 10, 1955.

Specimen of Letter to all Customers Re, al—Als Price Increase

Metal Fabricators, Inc.
3000 Main Street
Big Town, U. S. A.

Attention: Mr. John Doe, Purchasing Agent

Because of your patronage and generous use of our Huckbolt and Huckbolt Stumps during the past four years, we have been able to offset increased labor, material and operating expenses by increased production of the parts and consequent production efficiencies and economies.

We do find it necessary, however, at this time to increase the price of our Aircraft Huckbolt Pins and Aircraft Huckbolt Stumps nine per cent to cover cost increases not otherwise amortized during the past years. The price change herein announced will be placed into effect February 15, 1955, and a new printed price list will be sent to you under separate cover in the near future. Please note that the price for the Huckbolt Collars is unchanged.

Thanking you for your many courtesies, we remain

Very truly yours, Huck Manufacturing Company,
Robert Looker, Vice President in Charge of Sales.

RL:ch

[fol. 1145] IN THE UNITED STATES DISTRICT COURT FOR THE EASTERN DISTRICT OF MICHIGAN

GOVERNMENT'S EXHIBIT No. 51

HUCK MANUFACTURING COMPANY
Departmental Correspondence

Date March 25, 1955.

Subject: Commercial Huckbolt Price Increase Effective April 1, 1955.

To: All Product Engineers

From: M. E. Welch, Jr.

Copies: Armour, Benkert, Bernard, Ciafarani, Dobbe, Van Hecke, Looker, Mathews, Pelletier, Sierra, Welch, Westrick(4), Moran Hubert, File✓

No later than March 31, 1955, a mailing (see copy of transmittal letter attached) is being released to all customers announcing a Commercial Huckbolt price increase effective April 1, 1955.

Complete newly printed price sheets will accompany the mailing , and a set punched for catalog insertion will at the same time be sent to every Product Engineer.

The price increase will affect Commercial Huckbolt Pins only, exclusive of Collars. *Collar prices remain unchanged.* The increase on the Pins which will amount to 15% with the exception of non-hole filling steel Pins which will be increased 11% in the 3/16" diameter, 9% in the 1/4", 15% in the 5/16", and 7% in the 3/8".

An initial supply of the new price sheets will of course be shipped to every Product Engineer as soon as they are off the press and additional quantities will remain available upon request.

In considering reasons for the increase, the following factors are pertinent:

1. Material expense (aluminum) has increased 31% since the last CL price raise, which was effective December 15, 1950.

2. The cost of raw material for the steel Pins has increased 30%.
3. Labor costs have increased 26½%.
4. A substantial decrease since the above date has been effected by adding grouping privileges to the policy —this was not previously permitted.
5. Since 1950 we have lowered the prices in the small quantities.
6. Grouping privileges are being continued even in the new prices.

[fol. 1146] CL price increase,
Effective April 1, 1955

The 15% (or less) does not pass on the greater proportion of the added material and labor costs. Higher sales volume, improved manufacturing procedures and general administrative economies have all contributed in absorbing the lion's share of the numerous costs that are beyond the control of any management.

Our customers have, in most cases, raised prices of their respective end products in a ratio far exceeding ours. Your own business experience will indicate that the above changes in production cost push our price increase into the far overdue category. While it is realized that some of the accounts will require reselling, no general adverse results are expected, and the usual splendid support of every Product Engineer is requested in this very necessary price revision.

Very best regards, M. E. Welch, Jr.

MEW:rm

To: Adams, Jones, Miller, Bivens & Hunt, Clute, DeLoach, Egnot, Frescoln, Hanneman, Houston, Mather, Messer, Miner, Crook, Huegin, Morgan (3), Buehring, Sarno, Myrick, Proffitt (2), Rufi, Salogga, Sintes Sales Engineers, Stockton, Strother, Thomson, Gillespie, Thone, Turney & Upton, Unfried, Villacres.

[fol. 1147] HUCK MANUFACTURING COMPANY
2480 Belleyue Avenue
Detroit, Michigan

March 30, 1955.

Dear Sir:

Your kind patronage and generous use has enabled us to "hold the line" on the basic price structure for Commercial Huckbolts since December, 1950. Rather than increase prices, increased production has allowed us to decrease prices for small quantities and give you a price benefit on groups of standard parts.

However, in the past four years our costs have increased 26½‰ for labor, 31% for aluminum and 30% for steel so that we now find it necessary to establish a new price structure for the Commercial Huckbolt.

The enclosed price list is effective April 1, 1955. As you will note, there is no change in the price for the Huckbolt Collars.

Thanking you for your many courtesies, we remain

Yours for better fastening, Robert Looker Vice President in charge of Sales.

RL/mh

[fol. 1148] IN THE UNITED STATES DISTRICT COURT FOR THE EASTERN DISTRICT OF MICHIGAN

GOVERNMENT'S EXHIBIT No. 52

HUCK MANUFACTURING COMPANY
Departmental Correspondence

October 3, 1955

Subject: Price Increase.

To: All Engineering Representatives.

From: Robert Looker

Copies: Armour, Benkert, Pelletier, Westrick, Welch, Matthews, Serro, Murphy, Fielder, File✓

Please be advised that effective October 1, 1955, prices for Huck products as shown are increased according to the tabulation listed:

Product	Increase
CKL	Plus 10%
OS-OSR	Plus 10%
Deutsch Aircraft Rivet	
1250 to 7499 pieces	Plus 5%
7500 and over	Plus 12%
PT and HR Rivets	
100,000 pieces quantity	Plus 10%
CL Pins	Plus 8%
CL Collars (LC-F, LC-I & 2LC-R)	Plus 10%
AL Steel 3/16 & 1/4" dias.	Plus 5%
5/16 & 3/8" dias.	Plus 20%
Aluminum	
5/32", 3/16" & 1/4" dias.	Plus 10%
5/16" & 3/8" dias.	Plus 20%
ALS	Plus 20%
SAL 3/16" & 1/4" dias.	Plus 5%
5/16 & 3/8" dias.	Plus 20%
SLS	Plus 20%

BL cost studies are not yet complete. Price increase, if necessary, will be answered at a later date.

9SP No change

The price increases noted as explained to you at our Sales Meeting are necessary for the purpose of recuperating substantial material and labor increases and for the purpose of fixing an adequate price in order to make a reasonable profit for those items which we found were priced out of line with our operating cost.

Complete new price lists for all Huck products shown above, with exception of the Blind Huckbolt, have been printed and sent to customers on the basis that the customers using a certain product were given a new price list for that product.

[fol. 1149] Unfortunately, we have located the following described errors in the price list printed and in each case the catalog is being reprinted and will be sent out to customers by the end of this week with the proper information shown. For the SAL Western price list, the price for the 5/16" and 3/8" dia. are wrong. On the Eastern SAL price list the prices for SALP-T6 are wrong for the 100,000 piece quantity. The Eastern Commercial Huckbolt list does not show prices for the C12. The Deutsch price list shows a head style inversion on the inside cover at the bottom of the page.

Distribution copies will be sent to each Representative by the end of this week for future sales effort. Please destroy all copies of price lists which are superseded by the new list printed and sent to you October 1, as we do not want to find occasion of our erroneously quoting the wrong price under any circumstances. The new price lists are marked effective October 1 and in the cases where corrections were found necessary a "Revision A" is printed just under the effective date diamond.

If you have any questions on any of these, please contact the writer immediately.

Very sincerely yours, Robert Looker.

RL:mb

To: Adams, Bivens & Hunt, LeLoach, Hellyer, Siers, Messer, Huegin, Myrick, Strother, Gillespie, Unfried, Jones, Clute, Egnot, Houston, Larrabee, Miner, Limbeson, Proffitt, Salogga, Turney, Villacres, Miller, Darling, Hanneman, Crane, Mather, Crook, Morgan, Rufi, Thomson, Upton.

[fol. 1150] IN THE UNITED STATES DISTRICT COURT FOR THE EASTERN DISTRICT OF MICHIGAN

GOVERNMENT'S EXHIBIT No. 53

HUCK MANUFACTURING COMPANY
Departmental Correspondence

Date: April 6, 1956

Subject: Price Increases.

To: All Engineering Representatives.

From: Robert Looker.

Copies: Those Listed Below.

This memo is to advise that, effective April 9, 1956, we are putting into effect a price increase for all Huckbolts, BL, OS and CKL.

The price increase will effect new orders received April 9, 1956, and thereafter except for orders for materials based upon price quotations still in effect, in which case the quoted prices will govern as long as the order is received within the time permitted on the quotation.

Each recipient of this memo will be put in the role of having to defend Huck's position in this regard, and we are providing this memo to give each of you the ammunition you will need in future discussions.

From an overall standpoint keep the following foremost in your thoughts:

1. This price increase is justified, is needed, and is essential to the continuation of Huck as an industrial fastener supplier.
2. The price changes we have made in the past to try to keep up with increased costs of doing business have not been sufficient to allow us a normal profit margin. They have been held down in deference to our customers with the expectations that further manufacturing efficiencies would allow us a proper profit margin. Production efficiencies, of course, have played a major part in keeping prices down, but not to the extent hoped.

3. There has been substantial "creep" in the costs of doing business since our last price increase. The creep is made up of increased costs of:

   a. Materials
   b. Supplies
   c. Perishable tooling, heading and rolling dies, etc.
   d. Direct labor and indirect labor. Our new labor contract has increased our costs of doing business considerably.
   e. Plating, heat treating and anodizing.

There will, in some cases, be substantial complaint on the part of many buyers. Please bear in mind that good buyers are trying to save their employers money and their success is, to a great measure, measured by the amount of money they can save. It will be up to each of you to convince these buyers that the increase is needed and is justified. Keep in mind that the installed cost is much lower in most cases. [fol. 1151] If a buyer uses this price increase to try to get our products thrown out, go back to your original sales arguments on installed cost, better quality, simplified designs, etc.

During the next two months you will have many such "fires" to put out, and we expect your 100% success. If you have more than you can handle, please call in George Mathews or myself for assistance.

Above all, do not take the attitude that this increase is something that the company has done beyond your control, agreeing with the buyer that we are robbers. We are not and are only asking for a fair normal return on the business we do. You are a part of the company and will be expected to defend our position to the best of your ability.

Revised price lists are being sent to each customer effected and to you. Please destroy old AL, SAL, ALS, SLS, CL, BL, OS and CKL price lists. A copy of the covering letter for the price change is attached hereto.

Very best regards, Robert Looker.

RL:mb

To: Adams, Black, Jones, Miller, Hunt, Glute, Darling, DeLoach, Dobbe, Egnot, Gillespie, Hanneman, Houston, Siers, Larrabee, Mather, Messer, Miner, Brackeen, Crook,

Huegin, Morgan, Limbeson, Myrick, Proffitt, Rufi, Salogga, Strother, Thomson, Unfried, Upton, Villacres, Walsh, Wild, Bortner, Steel, Perran.

cc: Armour, Benkert, Braund, Westrick, Welch, Kruse, Serra, Mathews, Murphy, Pelletier, Brilmyer, Orloff, Albritton, Fielder.

[fol. 1152] IN THE UNITED STATES DISTRICT COURT FOR THE EASTERN DISTRICT OF MICHIGAN

GOVERNMENT'S EXHIBIT No. 55

HUCK MANUFACTURING COMPANY
Specialists in Cold Heading Riveting and Fastening Processes
2480 Bellevue Avenue
Detroit 7, Michigan

April 6, 1956.

To Our Customers:

Subject: Price Changes

The steady upward trend of the metal market, cost of labor, and general "creep" in cost of doing business has made it necessary, at this time, to adjust the prices for our fasteners, except for our Pull Through (PT) and Self Plugging (9SP) blind rivets. Accordingly, effective on orders received on and after April 9, 1956, prices per the attached lists will apply, except for outstanding quotations still in effect.

As the price changes are not general percentage increases but vary with the relative material and labor increases incurred and adjustments needed, new lists have been printed, and we ask that they be substituted for price lists you now have.

Our district offices will be glad to answer any specific questions you may have, and we thank you for your understanding.

Very sincerely yours, Huck Manufacturing Company.

[fol. 1153] IN THE UNITED STATES DISTRICT COURT FOR THE EASTERN DISTRICT OF MICHIGAN

GOVERNMENT'S EXHIBIT No. 56

HUCK MANUFACTURING COMPANY
Departmental Correspondence

Date: August 31, 1955.

Subject: FOB Los Angeles, California.

To: Mr. A. W. Armour.

From: R. Looker.

Copies: Benkert, Pelletier, Westrick, Sterritt, Miner, File✓

This memorandum will serve to confirm our discussions of yesterday, August 30, on the subject of our shipping materials FOB Los Angeles. Effective on and after September 6, 1955, we will ship all Huck products, except CKL-PT-9SP and tools, FOB Los Angeles at the present established prices plus 3%. As soon as time permits, we will have West Coast price lists established covering the sale of our AL-ALS-CL-SAL-SLS-OS and BL with the 3% included. The West Coast pricing is aimed at our business to the western states of Washington, Oregon, California, Nevada, Arizona, Idaho, New Mexico, Montana, Wyoming, and Utah; and customers in those western states will be urged to purchase our products from our West Coast stock FOB Los Angeles but have the privilege of purchasing FOB Detroit at our present established list prices.

In accordance with paragraph 12B of our lockbolt license agreement with the Townsend Company of September 3, 1954, Townsend has agreed to sell lockbolts at our published prices FOB Brighton, Pennsylvania. In keeping with the spirit of this agreement and with our plans, it is recommended that, effective on and after September 6, 1955, Townsend be permitted to sell lockbolts FOB The Townsend Company, Santa Anna, California. It is further recommended that this amendment to our license with the Townsend Company be handled by a letter rather than a

formad amendment—such a letter to contain perhaps the following suggested wording:

> "This letter is to advise that, effective on and after September 6, 1955, we are planning to ship all huckbolts and huckbolt collars to the western states FOB Inglewood, California at our present published list prices plus 3%. The western states will include Washington, Oregon, California, Nevada, Arizona, Idaho, New Mexico, Montana, Wyoming, and Utah; and customers in that area will be permitted to purchase materials from us either FOB Inglewood, California or FOB Detroit but will be urged to buy FOB Inglewood, California.
>
> In keeping with the spirit of our agreement with you of September 3, 1954, this letter is also to advise that we have no objection to your selling lockbolts FOB Santa Anna, California, in addition to FOB Brighton, Pennsylvania as is now permitted in paragraph 12B with the understanding, of course, that the fasteners sold FOB Santa Anna, California will be at our present established list prices, plus 3% to the nearest nickel. We will have lockbolt and lockbolt collar western price lists printed showing these prices with the 3% addition in the near future and will be very pleased to send you a copy or however many copies you would like to have for internal distribution.

[fol. 1154] I wonder if you will be so kind as to sign the attached copy of this letter, indicating your concurrence and agreement, and return that copy to me."

Very best regards, Robert Looker.

RL:dd

[fol. 1155] IN THE UNITED STATES DISTRICT COURT FOR THE EASTERN DISTRICT OF MICHIGAN

GOVERNMENT'S EXHIBIT No. 59

HUCK MANUFACTURING COMPANY
Departmental Correspondence

Huck Confidential

Date: May 25, 1956.

Subject: Pheoll Lockbolt Type Fasteners.

To: Mr. Armour.

From: Robert Looker.

Copies: Benkert, Sterritt, Brihmyer and File.

This memorandum will confirm some of the points discussed between John Sterritt and myself during our meeting today on the subject of the Pheoll lockbolts.

Based on the information received that Pheoll presented a lockbolt to Boeing for evaluation Wednesday, May 23, we believe that the following should be considered at this time.

It is extremely doubtful that Pheoll is aware of the methods claim allowances by the Board of Patent Examiners and that is it recommended that these claims be called to their attention at an early meeting (which I understand will be set up on or about June 11).

Both John and I believe that we should give strong consideration to licensing Pheoll under the claims of our Methods Patent.

Very best regards, Robert Looker.

RL:mb

[fol. 1156] IN THE UNITED STATES DISTRICT COURT FOR THE EASTERN DISTRICT OF MICHIGAN

GOVERNMENT'S EXHIBIT No. 60

THE BROWN-LINE CORPORATION

July 13, 1956.

Dear Mr. Armour:

As you will recall during our meeting of June 26 in Mr. Stern's office, we discussed certain phases of the manufacturing company I am starting. The plans for the business are now being formulated, and accordingly I ask to be given a license to manufacture and sell lockbolt devices other than those lockbolt devices manufactured and sold by Huck as standard parts under patents 2,114,493, 2,527,307, 1,531,048, 1,531,049 and under pending patents relating to shear lockbolt devices, to be made effective as soon as other commitments allow.

We will not be in a position to start manufacture for some months, but your early consideration and decision will allow proper planning to be made at these early stages, and will be greatly appreciated. May I discuss these matters with you during your next trip to Detroit?

Very sincerely, Robert Looker.

RL:mb

Huck Confidential

[fol. 1157] IN THE UNITED STATES DISTRICT COURT FOR THE EASTERN DISTRICT OF MICHIGAN

GOVERNMENT'S EXHIBIT No. 61

BROWN-LINE CORPORATION

AWA-AEB & Stern

October 23, 1959.

Mr. John C. Sterritt,
Harness, Dickey and Pierce,
7-141 General Motors Building,
Detroit, Michigan.

Dear John:

With reference to our letter of October 13, 1959, it has come to our attention that the Department of Justice is conducting an investigation to determine the extent of monopoly Huck may have over the Lockbolt industry.

If this contention is shown to exist, we would prefer not to be a party to what might later be shown to be the augmation of an illegal monopoly.

We therefore feel only license to offer our invention on a non-exclusive basis, and it is requested that paragraph 2 be changed accordingly.

As you will recall, on July 13, 1956, I wrote a letter to Mr. A. W. Armour requesting a Lockbolt patent license, which request was denied "because of certain complications which we have not been able to surmount."

We again request that we be granted a patent license under patents 2,531,048, 2,531,049 and 2,754,703 to manufacture and sell lockbolts, being well equipped for their design, manufacture, and sale.

Looking forward to hearing from you, I remain,

Very sincerely yours, Brown-Line Corporation,
R. Looker, President.

RL:vd

Attention of: J. C. S.

Received October 28 1959, Harness, Dickey & Pierce Detroit, Mich.

[fol. 1158] IN THE UNITED STATES DISTRICT COURT FOR THE EASTERN DISTRICT OF MICHIGAN

GOVERNMENT'S EXHIBIT No. 63

Please make copies & send to AWA—HEB & Stern.

Sent December 8, 1959

BROWN-LINE
Corporation

December 3, 1959.

Mr. John C. Sterritt,
Harness, Dickey and Pierce,
General Motors Bldg.,
Detroit, Michigan.

Dear John:

Going over my follow-up file yesterday, I noted a typographical error in my letter of October 23, 1959, to you.

I inadvertently call out patents 2,513,048 and 2,513,049, and these should be changed to read 2,531,048 and 2,531,049. That's what I get for using my faulty memory and not looking up the numbers.

I wonder if you would be so kind as to change my letter accordingly.

Please give my best to Merdith.

Very sincerely yours, Brown-Line Corporation,
R. Looker, President.

RL:vd

Attention of: J. C. S.

Changed nos. December 7, 1959.

Received December 7, 1959, Harness, Dickey & Pierce Detroit, Mich.

[fol. 1159] IN THE UNITED STATES DISTRICT COURT FOR THE EASTERN DISTRICT OF MICHIGAN

GOVERNMENT'S EXHIBIT No. 64

Please make copies & send to AWA—HEB & Stern.

Sent November 13, 1959

BROWN-LINE
Corporation

November 9, 1959.

Mr. John C. Sterritt,
Harness, Dickey and Pierce,
7-141 General Motors Building,
Detroit, Michigan.

Dear John:

Many thanks for your letter of November 4, 1959. The matter of requested patent license should perhaps be given a greater definition of intent on our part for the consideration of the Huck Company. If such a license is granted, we would only manufacture lockbolt collars at this time on screw machines we now own, and enter lockbolt pin manufacture as machinery is procured for that purpose. The License we request is not by us an admission of validity of the patents under which the license would be issued, but is a request for a simple nonrestrictive open license to manufacture lockbolt collars and pins and to sell such parts in open nonrestrictive competition, for which right we will agree to pay the Huck Company a reasonable royalty. Our request for such a license has been pending with the Huck Company for about 3½ years, and a reply will be appreciated.

The fifth paragraph of your letter perhaps needs some clarification. You, of course, understand that only the first three sentences of paragraph five and all of paragraph six of your letter of November 4, 1959, were discussed by us during our meeting in Los Angeles the end of September last when your request for license or patent right purchase for the bockbolt invention under discussion was made. Your statement then was that the Huck Company was interested

and would consider any reasonable proposal made to it for the purchase of use of patent rights.

The 4th through the 7th sentences of paragraph five leave us with doubt as to your meaning. Do you mean that Huck claims our invention comes within the claims of existing Huck patents, or that it is not an invention at all, being anticipated by Huck patents? We do not feel license to proceed with our own plans for its development and marketing until the question is answered, for if your letter is intended to imply notice of infringement, we would have to face such a claim.

Very sincerely yours, Brown-Line Corporation,
R. Looker, President.

RL:vd

Attention of: J. C. S.

Received November 12, 1959, Harness, Dickey & Pierce Detroit, Mich.

[fol. 1160] IN THE UNITED STATES DISTRICT COURT FOR THE EASTERN DISTRICT OF MICHIGAN

GOVERNMENT'S EXHIBIT No. 65

Please make & send copies to ADA—AEB & Al Stern

March 2, 1960

BROWN-LINE
Corporation

Mr. John C. Sterritt,
Harness, Dickey and Pierce,
7-141 General Motors Bldg.,
Detroit, Michigan.

Dear John:

I wonder if you would be so kind as to reply to my letters of October 23, 1959, and November 9, 1959, on the subject of our request for a lockbolt license.

If a license is to be granted, we would like to get started and if it is not to be granted, we want to know that too so that we might proceed with other plans. As it is, we do

not know the intent of the Huck Company and are therefore unable to proceed with the good development of our company's business in face of the Huck Company's domination over the lockbolt industry.

Sincerely yours, Brown-Line Corporation, R. Looker, President.

RL:ad

Received March 4, 1960, Harkness, Dickey & Pierce, Detroit, Mich.

Attention of: J.C.S.

[fol. 1161] IN THE UNITED STATES DISTRICT COURT FOR THE EASTERN DISTRICT OF MICHIGAN

GOVERNMENT'S EXHIBIT No. 66

Sales File.

RIV-TITE
OLYMPIC SCREW & RIVET CORPORATION
Downey, California

cc: AWA-AEB. Sterritt, copied September 29 1954, S.R.M

Sept. 27, 1954.

Mr. Robert Looker,
Vice President in Charge of Sales,
Huck Manufacturing Company,
2480 Bellevue Ave.,
Detroit 7, Mich.

Dear Bob:

Thank you for your complimentary letter of Sept. 21st. I also note your new position, and want to take this opportunity to congratulate you on being Vice President in Charge of Sales. I am sure it is well deserved.

You mention that your examination of our brochure indicated something to you about our rivet and your Patent 2,527,307. If there is something specific about it, we would

be glad to discuss it with you; but let me assure you, Bob, that we are not making a 9SP or a PT rivet.

As far as a license is concerned, I would like to give that some further thought. I'm planning to attend the National Symposium on titanium in Cleveland Oct. 11 and 12, which I presume you will attend, too. I would be glad to go into this matter with you at that time.

Speaking of licenses, I would also like you to give some thought in considering us for a license on your lock-bolt. I am sure we could do a good job for you.

Cordially yours, Olympic Screw & Rivet Corporation,
S. R. Maness.

srm:eg

[fol. 1162] IN THE UNITED STATES DISTRICT COURT FOR THE EASTERN DISTRICT OF MICHIGAN

GOVERNMENT'S EXHIBIT No. 68

Sales File

cc: Armour, Benkert, Sterritt, File✓

September 29, 1954.

Mr. S. R. Maness,
President,
Olympic Screw & Rivet Corporation,
11406 South Downey Avenue,
Downey, California.

Dear Sam:

Many thanks for your kind letter of September 27 and your very fine compliments. Your words are appreciated.

It is true that I am planning to attend the Titanium Symposium in Cleveland but only on October 12 as I have another engagement on October 11. I will look you up then and perhaps we can be in a better position to discuss the matters relating to our Patent 2,527,307.

We can also discuss matters of a lockbolt license at that

time but I am afraid that there is very little we can discuss of real value for we have just signed a lockbolt license with the Townsend Company.

Looking forward to seeing you then, I remain

Very sincerely yours, Huck Manufacturing Company,
Robert Looker, Vice President in Charge of Sales.

RL:rm

[fol. 1163] IN THE UNITED STATES DISTRICT COURT FOR THE EASTERN DISTRICT OF MICHIGAN

GOVERNMENT'S EXHIBIT No. 69

HUCK MANUFACTURING COMPANY
Departmental Correspondence

CURRENT LICENSE FILE

Date: May 11, 1953.

Subject: Meeting May 11, 1953. License—Lockbolts ITW

To: see copies.

Copies: Messrs. Sterritt Armour, ✓ Benkert, Dobbe, Westrick, Looker.

From: Robert Looker.

Notes taken during meeting of May 11, 1953.
If license are pros and cons below:

For:

1. Labour negotiates more favorable light.
2. Develop greater market overall.
3. Large market will not buy because of single source.
4. Royalties—income without capital expenditures.
5. Townsend *might* withdraw appeal if have license.

Against:

1. Chance of price of I.T.W. Lockbolts lower than ours.
2. Would cause dip in business we now have—first I.T.W. customers would probably be ours.
3. Patent suit not yet ended—if appeal reverses lower court would give know how to I.T.W. for naught.
4. Possibility of limited market now due to present high prices—possible not enough for I.T.W. & Huck.

Considerations:

1. Price clauses—I.T.W. & Huck same price. Legality possibly in question in future by future court interpretations on law—could be revised by amendment of license.
2. Change name to Huckbolt.
3. Royalties—Commercial—minimum royalty basis. Government—lower.
4. Distinguishing markings—
5. Improvements—mutual benefits.
6. Consider factors now regarding our present costs—which are unknown now.

Very best regards, Robert Looker.

RL:dr

[fol. 1164] IN THE UNITED STATES DISTRICT COURT FOR THE EASTERN DISTRICT OF MICHIGAN

GOVERNMENT'S EXHIBIT No. 70

July 7, 1958.

AGREEMENT

This Agreement, made at Detroit, Michigan, this 22nd day of October, 1958, between Huck Manufacturing Company, a corporation of Michigan, having its principal place of business at 2480 Bellevue Avenue, Detroit, Michigan (hereinafter referred to as "Huck"), and Townsend Company, a corporation of Pennsylvania, having its principal place of business at the Borough of Fallston, Beaver

County, Pennsylvania, (hereinafter referred to as "Townsend"):

Witnesseth:

Whereas, Huck and Townsend are both engaged in the development, design, construction, use and sale of tools and equipment and parts thereof which are employed in the installation or setting and removal of lockbolt devices, which are two-part fastening devices including a pin and collar, and in which the pin is applied to the work from one side thereof and the collar applied to the pin from the other side of the work and in which the collar in swaged into locking grooves in the pin simultaneously with the setting of the fastener;

Whereas, Townsend and Huck desire to exchange options to obtain nonexclusive licenses to manufacture and sell tools and equipment and parts thereof embodying the designs of each other in the United States of America on the terms and conditions hereinafter set forth.

Now, therefore, in consideration of the mutual covenants and agreements hereinafter contained it is agreed by and between the parties hereto as follows:

1. It is agreed between Huck and Townsend that the "Licensed Products" forming the subject matter of this agreement shall include the following:

[fol. 1165] a. At the present time, Huck has released the following tools and equipment for the setting of lockbolt fasteners:

EXHIBIT A

All of the above-listed tools and equipment shall be hereinafter included in the term "Huck Licensed Products."

b. In the future, should Huck release for sale any additional tools and equipment for the setting of lockbolt fasteners, then upon the day of such release, Huck shall supply Townsend with identification of such tools and equipment and they shall also then be included in the term "Huck Licensed Products."

c. At the present time, Townsend has released the following tools and equipment for the setting of lockbolt fasteners:

EXHIBIT B

All of the above-listed tools and equipment shall be hereinafter included in the term "Townsend Licensed Products."

d. In the future, should Townsend release for sale any additional tools and equipment for the setting of lockbolt fasteners, then upon the day of such release, Townsend shall supply Huck with identification of such tools and equipment and they shall also then be included in the term "Townsend Licensed Products."

2. Effective March 1, 1959 Huck hereby grants to Townsend an option to obtain a non-exclusive right and license to manufacture, use and sell such Huck Licensed Products as it may elect, in the United States of America, which Huck may design and develop or which it may have designed or developed for it, whether patentable or not, and agrees to supply Townsend, upon identification of its elected Huck Licensed Products and written request by Townsend, with such working drawings as it may have or which it may at any time acquire during the life of this license with respect to such elected Huck Licensed Products

[fol. 1166] 3. Effective March 1, 1959, Townsend hereby grants to Huck an option to obtain a nonexclusive right and license to manufacture, use and sell such Townsend Licensed Products as it may elect, in the United States of America, which Townsend may design and develop or which it may have designed or developed for it, whether patentable or not, and agrees to supply Huck, upon identification of its elected Townsend Licensed Product and written request by Huck, with such working drawings as it may have or which it may at any time acquire during the life of this license with respect to such elected Huck Licensed Products.

4. The option granted under Paragraph 2 above may be exercised by Townsend by its giving written notice to Huck identifying the Huck Licensed Product it elects to manufacture and sell and accompany such notice with payment of Twenty Five Thousand Dollars ($25,000) for each such elected Licensed Product. Within ten (10) days after receipt of such written

Option payment

notice, Huck shall deliver to Townsend such working drawings as it may have with respect to such elected Licensed Product identified by Townsend in said written notice.

5. The option granted under Paragraph 3 above may be exercised by Huck by its giving written notice to Townsend identifying the Townsend Licensed Product it elects to manufacture and sell and accompany such notice with payment of Twenty Five Thousand Dollars ($25,000) for each such elected Licensed Product. Within ten (10) days after receipt of such written notice, Townsend shall deliver to Huck such working drawings as it may have with respect to such elected Licensed Product identified by Townsend in said written notice.

Option payment

6. The right and license granted to Townsend by Huck under Paragraph 2 above with respect to the elected [fol. 1167] Licensed Products identified by Townsend under Paragraph 4 above shall include a nonexclusive right and license under any United States Letters Patent and applications for Letters Patent now owned or later acquired by Huck with respect to said elected Licensed Products. This license also applies to elected Licensed Products covered by any continuations, divisions of, or substitutes for said applications for Letters Patent, and also any reissues or extensions of any said Letters Patent.

7. The right and license granted to Huck by Townsend under Paragraph 3 above with respect to the elected Licensed Products identified by Huck under Paragraph 5 above shall include a nonexclusive right and license under any United States Letters Patent and applications for Letters Patent now owned or later acquired by Townsend with respect to said elected Licensed Products. This license also applies to elected Licensed Products covered by any continuations, divisions of, or substitutes for said applications for Letters Patent, and also any reissues or extensions of any said Letters Patent.

8. In addition to the amount specified in Paragraph 5 above and with respect to the elected Licensed Products identified thereunder, Huck agrees to pay to Townsend:

a. A royalty of Five Per Cent (5%) on the net selling price of all elected Licensed Products manufactured and sold by it

Royalty payable by Huck

which are covered by any claim of any of the Townsend Letters Patent licensed herein or which are constructed exactly according to drawing supplied Huck by Townsend under Paragraph 3 above.

b. With respect to elected Licensed Products which embody a portion only of the designs supplied Huck by Townsend under Paragraph 3 above and which include variations by Huck's own designs therein, a royalty of Five Per Cent (5%) on the net selling price of all such elected [fol. 1168] Licensed Products. If, after three (3) years from the receipt of drawings supplied to Huck by Townsend under Paragraph 3, Letters Patent have not been granted to Townsend covering the designs disclosed in such drawings with respect to elected Licensed Products, then payment of royalties under this subparagraph *b* may be discontinued until such Letters Patent are granted Townsend, and the payments of royalties will immediately be resumed upon notice to Huck of the grant of such Letters Patent.

Discontinuance of royalties, etc.

9. In addition to the amount specified in Paragraph 4 above and with respect to the elected Licensed Products identified thereunder, Townsend agrees to pay to Huck:

Royalty payable by Townsend

a. A royalty of Five Per Cent (5%) on the net selling price of all elected Licensed Products manufactured and sold by it which are covered by any claim of any of the Huck Letters Patent licensed herein or which are constructed exactly according to drawings supplied Townsend by Huck under Paragraph 4 above.

b. With respect to elected Licensed Products which embody a portion only of the designs supplied Townsend by Huck under Paragraph 4 above and which include variations by Townsend's own designs therein, a royalty of Five Per Cent (5%) on the net selling price of all such elected Licensed Products. If, after three (3) years from the receipt of drawings supplied to Townsend by Huck under Paragraph 4, Letters Patent have not been granted to Huck covering the designs disclosed in such drawings with respect to elected Licensed Products, then payment of royalties under this subparagraph *b* may be discontinued until such

Discontinuance of royalty

Letters Patent are granted Huck, and the payments of royalties will immediately be resumed upon notice to Townsend of the grant of such Letters Patent.

10. It is understood that neither party shall be under any obligation to exercise its option as provided in Para- [fol. 1169] graph 4 and 5 above with respect to tools and equipment included in the term "Licensed Products" as defined in Paragraph 1 above, and in the absence of exercising its option as provided herein each party shall be free of any obligation to the other, except such obligations as may be imposed by the existence of valid United States Letters Patent covering such tools and equipment.

11. Huck and Townsend shall both keep proper books of account showing sales of Licensed Products subject to royalty under this agreement and each agrees to report to the other by the 20th of each month the Licensed Products sold by it during the preceding month, giving in such report the dollar amount sold during the month being reported. Licensed Products shall be considered sold when billed, or if not billed out, when delivered or paid for before delivery. In computing sales of Licensed Products, credit shall be given for returned Licensed Products and Licensed Products which are given out as samples without charge to the customers shall not be subject to royalty.

Reports

12. Within twenty days following the last day of February, May, August and November, Huck and Townsend each will submit a written statement to the other giving the total sales of Licensed Products subject to royalty under this agreement for the quarter being reported, and accompany such quarterly report with the payment of the royalty then due.

Payment date

13. Huck and Townsend shall each have access to the books and records of the other at all reasonable times to check the amount of sales of Licensed Products made hereunder by the other from time to time, provided, however, that either may, at its election, substitute for its examination a certificate of a mutually agreed upon firm of certified public accountants as to the amount of said sales and as to [fol. 1170] any other figures that will determine the amount of royalties payable thereon. Each will not require an

examination or such certified statement more than once a year.

14. In the event that either Huck or Townsend fails to comply with the terms of reports and royalty payment specified herein, and so often as the same shall happen, or breaches any other material provisions of this agreement, the other may, at its option, by giving sixty (60) days' notice in writing, specifying the breach complained of, terminate this agreement and the license granted hereby, provided, however, that if the breach complained of shall be corrected by either Huck or Townsend within thirty (30) days after the mailing of said notice, then this agreement shall remain in full force and effect.

15. Huck and Townsend each agree to suitably identify the Licensed Products as manufactured and sold by each one to distinguish from the Licensed Products manufactured and sold by each other, the manner of so distinguishing the Licensed Products to be mutually determined hereinafter. Huck may apply the name Huck to Licensed Products sold by it and Townsend may apply the name Townsend to Licensed Products sold by it.

16. Notice as herein provided shall mean the placing of the notice in the mails, registered-return, postage prepaid, to the party being notified at the address above given, or at such other address designated by the parties hereto, or by otherwise delivering to the other party such notice.

17. The licenses herein granted are nontransferable by Huck or Townsend without the written consent of the other first had and obtained, except to the successors of the entire fastener business of Huck or Townsend, and this agreement shall be binding upon, and inure to the benefit of any such successors of Huck or Townsend.

[fol. 1171] 18. Unless previously terminated in accordance with the terms hereof, this agreement and the license herein granted shall extend for fifteen (15) years or the full term of the United States Letters Patent which are or may be included in this agreement, and shall terminate at the end of fifteen (15) years or at the expiration of the last to expire of said patents, whichever term is longer.

Term of agreement

19. Huck or Townsend may, either one, cancel this agreement with respect to the option rights granted in Para-

graphs 2 and 3 at will and at any time upon twelve (12) months' previous notice in writing to the other. However, with respect to option rights already vested by reason of having been exercised in accordance with paragraphs 4 and 6, such rights and the obligations with respect thereto shall continue for the life of the license as defined in Paragraph 18.

20. Huck and Townsend each agree to properly affix the necessary statutory patent notices to all of the Licensed Products manufactured and sold hereunder.

Signed at Detroit, in the County of Wayne and State of Michigan, this 22nd day of October, 1958.

Huck Manufacturing Company, By A. W. Armour, III, Its President.

Attest: Alfred E. Benkert. Its Exec. Vice President.

Signed at Fallston, in the County of Beaver and State of Pennsylvania, this 21st day of October, 1958.

Townsend Company, By F. R. Dickenson, Its — —.

Attest: Miss Thelma I. Shearer, Its — —.

Thelma I. Shearer, Notary Public, New Brighton, Beaver County, Pa. My Commission Expires April 17, 1961.

[fol. 1172] EXHIBIT A October 2, 1958

Power Packs

I. Power Packs—805 Series

a) 805
b) 805TE
c) 805FC
d) 805 TEFC
e) 805DD
f) 805G

II. Power Packs—800 and 801 Series

a) 800
b) 800DD
c) 801
d) 801DD

III. Power Cells—127A, 128A, 131A Series

a) 127A
b) 128A
c) 128A-1
d) 131A
e) 131A-1

IV. Hydraulic Pull Tool—609 (formerly 125)

Hydraulic Pull Tool—618 (Double Drive 609)

Nose Assemblies

99-81	99-296
99-84	99-298
99-179	99-299
99-215	99-310
99-216	99-318
99-217	99-344
99-230	

[fol. 1173]

V. Hydraulic Pull Tool—611 (formerly 126G)
Hydraulic Pull Tool—607 (Double Drive 611)
Hydraulic Pull Tool—612 (formerly 126E)
Hydraulic Pull Tool—616 (Double Drive 612)

Nose Assemblies

99–130	99–157	99–255	99–289
99–135	99–158	99–256	99–290
99–136	99–165	99–257	99–322
99–137	99–166	99–258	99–327
99–138	99–167	99–262	99–328
99–140	99–222	99–265	99–336
99–145	99–225	99–266	99–355
99–148	99–226	99–267	99–356
99–150	99–232	99–268	99–360
99–156	99–252	99–269	99–501

VI. Hydraulic Pull Tool—610 (formerly 126C)
Hydraulic Pull Tool—608 (Double Drive 610)
Hydraulic Pull Tool—613 (formerly 126F)
Hydraulic Pull Tool—617 (Double Drive 613)

Nose Assemblies

99–116	99–158	99–245	99–355
99–118	99–225	99–246	99–395
99–126	99–226	99–255	99–396
99–127	99–227	99–256	99–397
99–129	99–228	99–330	99–398
99–156	99–235	99–337	
99–157	99–236	99–338	

VII. Hydraulic Pull Tool—614 (formerly 146)
Hydraulic Pull Tool—619 (Double Drive 614)

Nose Assemblies

99–400	99–409
99–402	99–410
99–406	99–412

VIII. Pneumatic Pull Tool—352
Pneumatic Pull Tool—356 (formerly 139A)

[fol. 1174]

Nose Assemblies

99–33	99–240	99–362	92212
99–55	99–248	99–363	92214
99–101	99–249	99–364	92215
99–105	99–300	99–388	92216
99–152	99–302	99–389	92221
99–195	99–325	99–390	92222
99–198	99–339	99–391	92223
99–212	99–341	92210	92224
99–220	99–345	92211	

IX. Pneumatic Pull Tool—353
Pneumatic Pull Tool—354 (Double Drive 353)

99–58	99–277	99–368	92231
99–69	99–280	99–375	92232
99–90	99–286	99–376	92236
99–99	99–320	99–393	92237
99–100	99–361	99–394	92385
99–188	99–365	99–526	92386
99–189	99–366	92229	
99–276	99–367	92230	

X. Nose Assemblies—Stump Sets—Gauges
(Pull tools not included in this option)

99–33	99–136	99–216	99–257
99–41	99–137	99–217	99–258
99–55	99–138	99–220	99–262
99–58	99–140	99–222	99–265
99–69	99–145	99–225	99–266
99–81	99–148	99–226	99–267
99–84	99–150	99–227	99–268
99–90	99–156	99–228	99–269
99–99	99–157	99–230	99–276
99–100	99–158	99–232	99–277
99–101	99–165	99–235	99–280
99–105	99–166	99–236	99–286
99–116	99–167	99–240	99–289
99–117	99–179	99–245	99–290

Nose Assemblies—Stump Sets—Gauges (continued)

99–118	99–188	99–246	99–296
99–126	99–189	99–248	99–298
99–127	99–195	99–249	99–299
99–129	99–198	99–252	99–300
99–130	99–212	99–255	99–302
99–135	99–215	99–256	99–310

[fol. 1175]

99–317	99–361	99–396	92215
99–320	99–362	99–397	92216
99–322	99–363	99–398	92221
99–325	99–364	99–399	92222
99–327	99–365	99–400	92223
99–328	99–366	99–402	92224
99–330	99–367	99–406	92229
99–336	99–368	99–409	92230
99–337	99–375	99–410	92231
99–338	99–376	99–412	92232
99–339	99–388	99–425	92236
99–341	99–389	99–501	92237
99–344	99–390	99–526	92385
99–345	99–391	92210	92386
99–355	99–393	92211	
99–356	99–394	92212	
99–360	99–395	92214	

Stump Sets	Gauges
915–1–6A*	HG–34D–1
915–1–6B	HG–34D–2
915–1–6C	HG–34D–3
915–5–6A	HG–34D–4
915–5–6B	HG–34D–5
915–5–6C	HG–34D–6
914–4–6	HG–34D–7
	HG–34D–8
915–1–8A*	
915–1–8B	HG–75–1
915–1–8C	HG–75–2
915–5–8A	HG–75–3
915–5–8B	HG–75–4
915–5–8C	

Stump Sets	Gauges
914–4–8	HG–76–1
	HG–76–2
915–1–10A*	HG–76–3
915–1–10B	HG–76–4
915–5–10A	HG–77
915–5–10B	HG–85
915–5–10C	HG–119
914–4–10	
915–1–12A*	
915–5–12A	
915–5–12B	
915–5–12C	
914–4–12	

* Indicates Standard Set.

[fol. 1176] EXHIBIT B

October 20, 1958.

Power Guns

1. G-85 Series

a) G-85
b) G-87
c) Lockbolt pulling attachments that are standard equipment with the above.

[fol. 1177] IN THE UNITED STATES DISTRICT COURT FOR THE EASTERN DISTRICT OF MICHIGAN

GOVERNMENT'S EXHIBIT No. 71

SALES AGREEMENT

This Agreement made at Detroit, Michigan, this 22nd day of October, 1958, between Huck Manufacturing Company, a corporation of Michigan, having its principal place of business at 2480 Bellevue Avenue, Detroit, Michigan, (hereinafter referred to as "Huck"), and Townsend Com-

pany, a corporation of Pennsylvania, having its principal place of business at the Borough of Fallston, Beaver County, Pennsylvania, (hereinafter referred to as "Townsend");

Witnesseth:

Whereas, Huck and Townsend are both engaged in the development, design, construction, use and sale of tools and equipment and parts thereof which are employed in the installation or setting and removal of lockbolt devices, which are two-part fastening devices including a pin and collar, and in which the pin is applied to the work from one side thereof and the collar applied to the pin from the other side of the work and in which the collar is swaged into locking grooves in the pin simultaneously with the setting of the fastener, all of which devices and parts thereof being hereinafter referred to as Licensed Products;

Whereas, Townsend and Huck have heretofore sold, placed and distributed the products hereinbefore described and continue in the sale, lease, rental, distribution and placement of such devices and to cause the aforesaid products of each to be available to the other;

Now, Therefore, in consideration of the mutual covenants and agreements hereinafter contained, it is agreed by and between the parties hereto as follows:

1. Huck hereby grants to Townsend a non-exclusive right, during the term of this agreement, to sell the beforemen- [fol. 1178] tioned and described products manufactured by or for Huck, together with any parts of or replacements for said articles. Huck agrees that it will make the aforesaid products available to Townsend in common with other purchasers. The rights granted under this Paragraph 1 to be limited to sales made in and intended for the use of said products within the Continental United States of America.

2. Townsend hereby grants to Huck a non-exclusive right, during the term of this agreement, to sell the beforementioned and described products manufactured by or for Townsend, together with any parts of or replacements for said articles. Townsend agrees that it will make the afore-

said products available to Huck in common with other purchasers. The rights granted under this Paragraph 2 to be limited to sales made in and intended for the use of said products within the Continental United States of America.

3. Huck and Townsend shall each, and at all times, publish and make available to the other party hereto, list prices on "complete units", for example, complete nose assemblies, complete nippers, complete guns, complete power packs, etc. The parties will likewise publish and make available to the other party hereto list prices on spare parts making up the above "complete units" in any quantity whatsoever. The parties further agree that each of the parties hereto will allow discounts to the other party hereto in accordance with the schedule set forth in Schedule 1 attached hereto and made a part hereof by reference.

4. Sales by Huck to Townsend and by Townsend to Huck shall be at the discounts shown in Schedule 1 together with all other allowances or discounts normally offered to the trade.

5. Each of the parties hereto, upon sales of its products to the other party, shall grant like warranties to those published or normally offered the trade with respect to each of the products.

[fol. 1179] 6. The discounts hereinbefore mentioned and more particularly described in Schedule 1 hereto shall be in addition to any normal cash or similar discounts heretofore generally granted but received by either of the parties from the other on their purchases and sales between each other.

7. The term of this agreement shall begin on the 22nd day of October, 1958, and shall extend for the full term of one (1) year thereafter and from year to year following, for a period of 15 years, or the life of the patents unless this agreement is sooner terminated pursuant to the terms thereof. Huck or Townsend may, either one, cancel this agreement at will and at any time upon twelve (12) months' previous notice in writing to the other.

8. In the event that either Huck or Townsend fails to comply with the terms, covenants or agreements herein contained, the other party may, at its option, by giving

sixty (60) days' notice in writing specifying the breach complained of, terminate this agreement; provided, however, that if the breach complained of shall be corrected by either Huck or Townsend within thirty (30) days after the mailing of said notice, then this agreement shall remain in full force and effect.

9. The rights herein granted are not transferable by Huck or Townsend without the written consent of the other first had and obtained, except to the successors of the entire fastener and affiliated or similar businesses of Huck or Townsend and this agreement shall be binding upon and inure to the benefit of any such successors of Huck or Townsend.

10. In the event either of the parties hereto makes an assignment for the benefit of creditors, or in the event a petition in bankruptcy or reorganization or similar relief is filed by or against either of the parties hereto, or in the event a Receiver is appointed for either of the aforesaid parties, then and in that event the other party hereto shall be entitled to terminate this agreement as herein provided for any other breach of the terms or conditions hereof.

[fol. 1180] 11. It is expressly agreed that this agreement is wholly separate and apart from and shall not be deemed to terminate, modify or affect that certain agreement between the parties hereto, dated the 22nd day of October, 1958.

Signed at Detroit in the County of Wayne, and State of Michigan, this 22nd day of October, 1958.

Huck Manufacturing Company, By: A. W. Armour III, Its President.

Attest: A. E. Benkert, Its Exec. Vice Pres.

Signed at Fallston in the County of Beaver, and State of Pennsylvania, this 21th day of October, 1958.

Townsend Company, By: F. R. Dickenson, Its — —.

Attest: Miss Thelma I. Shearer, Its — —.

Thelma I. Shearer, Notary Public, New Brighton, Beaver County, Pa., my Commission Expires April 17, 1961.

[fol. 1181] SCHEDULE 1

* For less than 50 units—discount of 20%.
* For 50 units or more—discount of 25%.
* For all spare parts selling for more than $30.00—discount of 25%.
* For all spare parts selling for less than $30.00—discount of 30%.

---

* Note: also see supplement on Townsend letter May 7, 1959 attd herewith below.

TOWNSEND COMPANY
Established 1816
New Brighton, Pennsylvania

May 7, 1959.

Huck Manufacturing Company,
2480 Bellevue Avenue,
Detroit 7, Michigan.
Attention: Mr. A. E. Benkert

Gentlemen:

Subject: Supplement to Sales Agreement

We hereby make the following addition to Schedule 1 of our Sales Agreement dated October 22, 1958:

For 100 units or more of Townsend's G-85 tool ..... discount of 40%.
For 100 units or more of Townsend's G-87 tool ..... discount of 40%.

Signed at Fallston, in the County of Beaver, and State of Pennsylvania, this 7th day of May, 1959.

Townsend Company, By: F. R. Dickenson, Its President.

Attest: D. C. Paluour, Its Secretary-Treasurer.

Copies To: A. Armour, C. Armour (2), Brilmyer, Fielder, Fox, Gibb, Mathews, Reynolds, Rowse, Stern, Sterritt, Van Hecke.

[fol. 1182] IN THE UNITED STATES DISTRICT COURT FOR THE EASTERN DISTRICT OF MICHIGAN

GOVERNMENT'S EXHIBIT No. 72

May 6, 1958.

BLIND LOCKBOLT AGREEMENT

This Agreement, made at Detroit, Michigan, this 25th day of June, 1958, between Huck Manufacturing Company, a corporation of Michigan, having its principal place of business at 2480 Bellevue Avenue, Detroit, Michigan (hereinafter referred to as "Huck") and Townsend Company, a corporation of Pennsylvania, having its principal place of business at the Borough of Fallston, Beaver County, Pennsylvania (hereinafter referred to as "Townsend");

Witnesseth:

Whereas, Huck is engaged in the manufacture and sale of certain fastening devices (such devices being known and defined as Huck Blind Lockbolts) disclosed and identified by way of examples and not by way of limitation as Exhibit A attached hereto, which shall hereinafter be referred to as "licensed products", and is in possession of certain valuable information called "know-how", relating to the manufacture and use of said licensed products, and expects in the future to come into possession of further such information; and

Whereas, Townsend desires a license to manufacture and sell such licensed products and obtain from Huck its "know-how" relating to the manufacture and use of such licensed products, and Huck is desirous of licensing Townsend for the manufacture and sale of such licensed products.

Now, Therefore, in consideration of the mutual covenants and agreements hereinafter contained, it is agreed by and between the parties as follows:

1. Huck shall, so soon after the date of this agreement as Townsend may reasonably require, supply to Townsend, but at no expense to Huck, specifications, working and other drawings and other information that may be reasonably necesary [fol. 1183] to enable Townsend to manufacture said licensed products.

2. Huck hereby grants to Townsend a non-exclusive right and license to manufacture, use and sell licensed products in the United States of America employing therein the specifications, working and other drawings and all other information supplied Townsend by Huck under Paragraph 1 hereof.

3. Huck and Townsend agree to exchange information with respect to improvements that each may make in the licensed products, and with respect to improved techniques in the manufacture and use of said licensed products.

4. All information supplied Townsend by or on behalf of Huck under or pursuant to this agreement shall be treated as confidential by Townsend, and shall be used solely to enable Townsend to manufacture and sell licensed products in accordance with this agreement and during the continuance thereof.

5. Townsend shall insure that no such information as aforesaid is disclosed except to responsible employees of itself without the express prior consent of Huck.

6. As consideration for the information supplied and to be supplied, and for the assistance given and to be given by Huck, and for the license granted herein Townsend agrees to pay to Huck a royalty of Five Percent (5%) on the net selling price of all licensed products manufactured and sold by Townsend in whose design or manufacture substantial use is made of any designs or information supplied by or on behalf of Huck hereunder. By "net selling price" the parties hereto mean the net selling price of licensed products charged by Townsend, less all discounts allowed and taken.

Royalty

7. Townsend shall keep proper books of account showing [fol. 1184] sales of licensed products subject to royalty under this agreement, and agrees to report to Huck by the twentieth of each month the licensed products sold by it during the preceding month, giving in such report the dollar amount sold during the month being reported. Licensed products shall be considered sold when billed out or, if not billed out, when delivered or paid for before delivery. In computing sales of licensed products, credit shall be given for returned licensed products, and licensed products which are given out as samples without charge to the customer shall not be subject to royalty.

Reports and Payment

8. Within twenty (20) days following the last day of February, May, August and November, Townsend will submit a written statement giving the total sales of licensed products subject to royalty under this agreement for the quarter being reported, and accompany such quarterly report with payment of the royalty then due.

9. Huck shall have access to the books and records of Townsend at all reasonable times to check the amount of sales of licensed products made hereunder by Townsend from time to time, provided, however, that Townsend may, at its election, substitute for its examination a certificate of a mutually agreed upon firm of certified public accountants as to the amount of said sales and as to any other figures that will determine the amount of royalties payable thereon. Huck will not require an examination or such certified statement more often than once a year.

10. In the event that Townsend fails to comply with the terms of reports and royalty payment specified herein, and so often as the same shall happen, or breaches any other [fol. 1185] material provisions of this agreement, Huck may, at its option, by giving sixty (60) days' notice in writing, specifying the breach complained of, terminate this agreement and the license granted hereby, provided, however, that if the breach complained of shall be corrected by Townsend within thirty (30) days after the mailing of said notice, then this agreement shall remain in full force and effect.

11. Townsend hereby grants to Huck a non-exclusive, royalty-free license, with the right to sublicense on any improvements on said licensed products made or acquired by Townsend during the life of this agreement or products of the same type which are substitutes for the licensed products licensed herein by Huck.

12. For licensed products sold by Townsend as Huck equals, Townsend agrees to maintain Huck's quality for full equivalence in shear, tension and fatigue, for aircraft shear and tension allowables as defined or as may be defined by ANC5 Manual and for commercial licensed products typical strength properties defined in Huck-published commercial lockbolt engineering bulletins, which Huck agrees to supply to Townsend.

13. Townsend agrees to suitably identify the licensed

products as manufactured and sold by it to distinguish from the licensed products manufactured and sold by Huck, the manner of so distinguishing the licensed products to be mutually determined hereinafter.

14. Notice as herein provided shall mean the placing of the written notice in the mails, registered-return, postage prepaid, to the party being notified at the address above given, or at such other address designated by the parties hereto, or by otherwise delivering to the other party such notice.

[fol. 1186] 15. The license herein granted is nontransferable without the written consent of Huck had and obtained, except to the successors of the entire fastener business of Townsend, and this agreement shall be binding upon, and inure to the benefit of, any such transferee of Townsend and the successors and assigns of Huck.

Term of Agreement

16. Unless previously terminated in accordance with the terms hereof, this agreement and license herein granted shall extend for ten (10) years from the date hereof.

Signed at Detroit in the County of Wayne and State of Michigan this 25th day of June, 1958.

Huck Manufacturing Company, By A. W. Armour III, Its President.

Attest: Louis B. Fielder, Its Assistant Secretary.

Signed at New Brighton in the County of Beaver and State or Pennsylvania this 3rd day of July, 1958.

Townsend Company, By F. R. Dickenson, Its President.

Attest: D. C. Faluain, Its Secretary.

8000 10-62 DETROIT BLUE PRINT & SUPPLY CO.

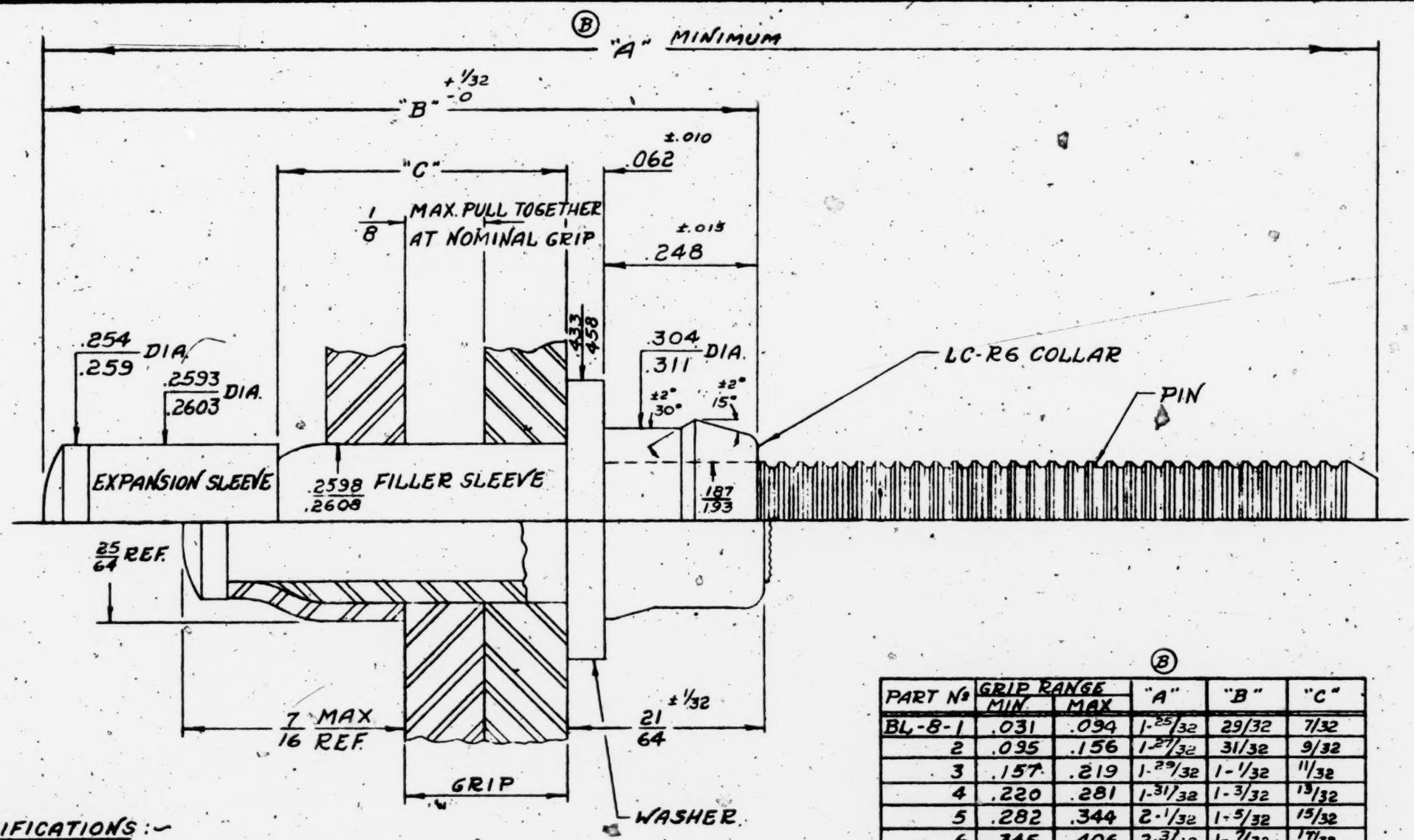

DRILLING	
CLEARANCE	
PRE DRILL	SIZE DRILL
"D"	"G"
.246	.26

SPECIFICATIONS :-

PIN

MATERIAL-HEAT TREATED ALLOY STEEL AISI 4037
HEAT TREATMENT-HUCK SPECIFICATION 101

EXPANSION SLEEVE

MATERIAL-HEAT TREATED STEEL AISI 1030 OR 1035

FILLER SLEEVE

MATERIAL-HEAT TREATED STEEL AISI 1137 OR 1141

Ⓑ

PART Nº	GRIP RANGE MIN	GRIP RANGE MAX	"A"	"B"	"C"
BL-8-1	.031	.094	1-25/32	29/32	7/32
2	.095	.156	1-27/32	31/32	9/32
3	.157	.219	1-29/32	1-1/32	11/32
4	.220	.281	1-31/32	1-3/32	13/32
5	.282	.344	2-1/32	1-5/32	15/32
6	.345	.406	2-3/32	1-7/32	17/32
7	.407	.469	2-5/32	1-9/32	19/32
8	.470	.531	2-7/32	1-11/32	21/32
9	.532	.594	2-9/32	1-13/32	23/32
10	.595	.656	2-11/32	1-15/32	25/32
11	.657	.719	2-13/32	1-17/32	27/32
12	.720	.781	2-15/32	1-19/32	29/32
13	.782	.844	2-17/32	1-21/32	31/32
14	.845	.906	2-19/32	1-23/32	1-1/32
15	.907	.969	2-21/32	1-25/32	1-3/32
16	.970	1.031	2-23/32	1-27/32	1-5/32
17	1.032	1.094	2-25/32	1-29/32	1-7/32
18	1.095	1.156	2-27/32	1-31/32	1-9/32

signs disclosed therein, and the technical data and engineering
re the exclusive property of the Huck Manufacturing Company.
to Huck upon written request and is not to be reproduced in
o anyone else without the express written consent of Huck.
evice shown in this drawing covered by Huck U.S. Patents Nos.
manufactured, used or sold

DRILLING PROCEDURE				HUCK MFG. CO., DRIVING TOOLS
CLEARANCE FIT		TIGHT FIT		
PRE DRILL	SIZE DRILL	PRE DRILL	SIZE DRILL	
"D"	"G"	"D"	6.6MM	Nos 125,126,139,352 & 353 WITH L-6 NOSE ASSEMBLY
.246	.261	.246	.2598	

designs disclosed therein, and the technical data and engineering are the exclusive property of the Huck Manufacturing Company. ied to Huck upon written request and is not to be reproduced in d to anyone else without the express written consent of Huck. f device shown in this drawing covered by Huck U.S. Patents Nos. 2,754,703. Subject devices not to be manufactured, used or sold ts.

★ STAMP
★ ETCH

JUN 25 1958

CHANGES			
	D	PLATEING REVISED	4-22-58
	D	QQ-P-416 TYPE I CLASS C	9-30-57
	C	REVISED	6-25-57
	B	REVISED	11-15-56
	A	ADDED	9-17-56
	LET.	WAS	DATE

HUCK MANUFACTURING CO.

BLANK PAGE

EXPANSION SLEEVE
MATERIAL-HEAT TREATED STEEL AISI 1030 OR 1035

FILLER SLEEVE
MATERIAL-HEAT TREATED STEEL AISI 1137 OR 1141

COLLAR
MATERIAL-MILD STEEL
WASHER: AN-960-10
ALL COMPONENT PARTS OF THE BLIND HUCKBOLT ARE CADMIUM PLATED PER QQ-P-416 TYPE I, CLASS 3
(D) COLLAR HAS DICHROMATE POST TREATMENT PER QQ-P-416 TYPE II CLASS 3

FRACTIONAL DIMENSIONS TO BE HELD ± .010

12	.720	.781	2-9/32	1-19/32	29/32
13	.782	.844	2-17/32	1-21/32	31/32
14	.845	.906	2-19/32	1-23/32	1-1/32
15	.907	.969	2-21/32	1-25/32	1-3/32
16	.970	1.031	2-23/32	1-27/32	1-5/32
17	1.032	1.094	2-25/32	1-29/32	1-7/32
18	1.095	1.156	2-27/32	1-31/32	1-9/32
19	1.157	1.219	2-29/32	2-1/32	1-11/32
20	1.220	1.281	2-31/32	2-3/32	1-13/32
21	1.282	1.344	3-1/32	2-5/32	1-15/32
22	1.345	1.406	3-3/32	2-7/32	1-17/32
23	1.407	1.469	3-5/32	2-9/32	1-19/32
24	1.470	1.531	3-7/32	2-11/32	1-21/32
25	1.532	1.594	3-9/32	2-13/32	1-23/32

Restrictions:
This drawing, the structural designs disclosed therein, and service represented thereby are the exclusive property of Huck. This drawing is to be returned to Huck upon written request, and in whole or in part or disclosed to anyone else without the written consent of Huck. Manufacture, use and sale of device shown in this drawing is covered by U.S. Patents 2,531,048, 2,531,049, and 2,754,708. Subject device may be in violation of above patents.

Restrictions:
This drawing, the structural designs disclosed therein, and the technical data and service represented thereby are the exclusive property of the Huck Manufacturing This drawing is to be returned to Huck upon written request and is not to be re whole or in part or disclosed to anyone else without the express written consp Manufacture, use and sale of device shown in this drawing covered by Huck U.S. 2,531,048, 2,531,049, and 2,754,703. Subject devices not to be manufactured, in violation of above patents.

★ STAMP
★ ETCH

JAN 25 1958

CHANGES			
D	PLATEING REVISED	4-22-58
D	QQ-P-416 TYPE 2 CLASS C	9-30-57
C	REVISED	6-25-57
B	REVISED	11-15-56
A	ADDED	9-17-56
LET.	WAS	DATE.

HUCK MANUFACTURING CO.
2480 BELLEVUE AVE.
DETROIT 7, MICH., U. S. A.

TITLE
COORDINATION DRAWING OF BL-8
1/4" BLIND HUCKBOLT

MATERIAL

HEAT TREATMENT

SCALE ___ FT.
DATE 8-16-56
DR. BY KB.
CH. BY
APP. BY

BL-8

INDEX NUMBER
145

EXHIBIT A.

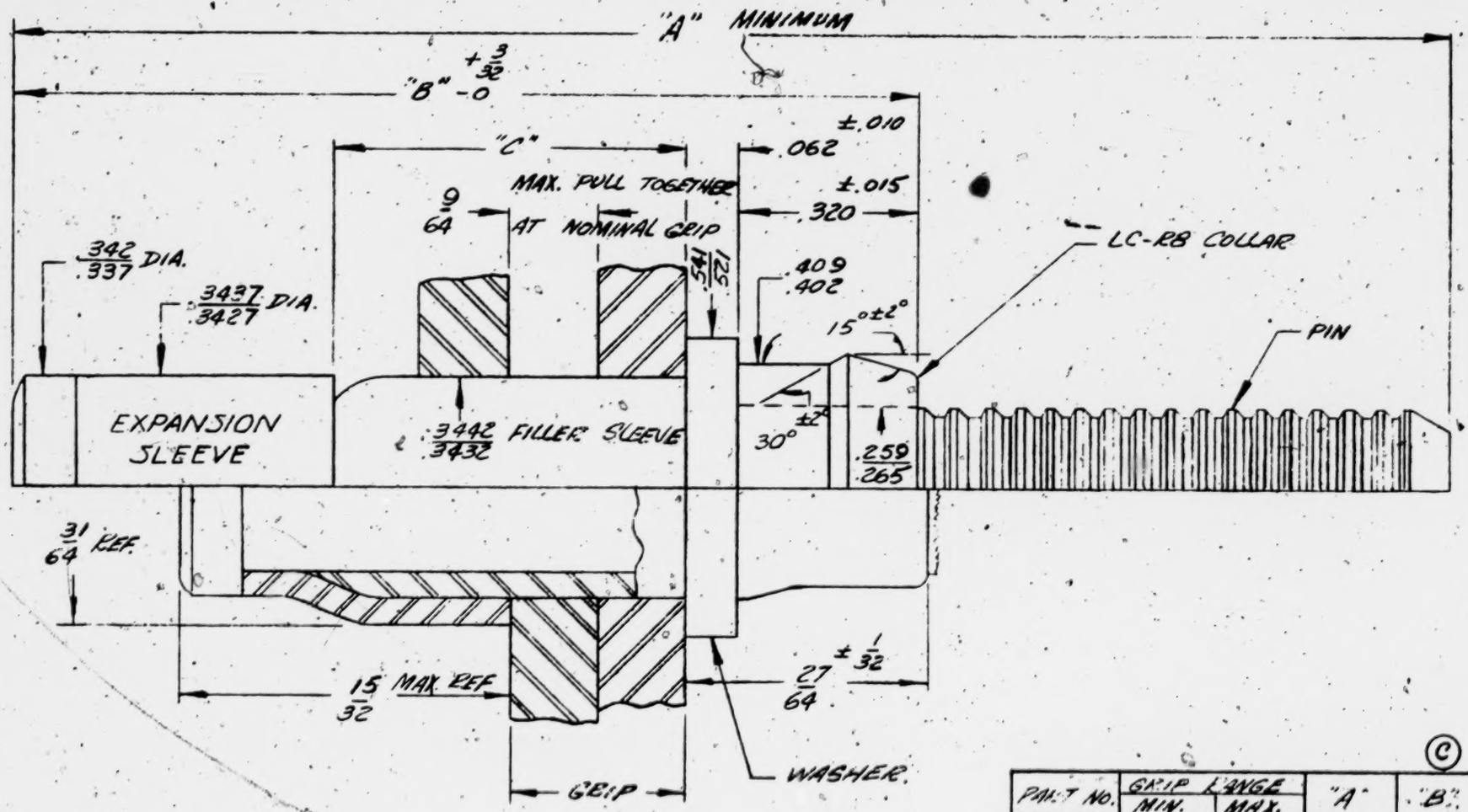

DRILLING PROCEDURE			
CLEARANCE FIT		TIGHT FIT	
PRE DRILL	SIZE DRILL	PRE DRILL	SIZE DRILL
2/64 .328	"S" .348	2/64 .328	11/32 .344

SPECIFICATIONS: —

PIN

MATERIAL - HEAT TREATED ALLOY STEEL AISI 4037
HEAT TREATMENT HUCK SPECIFICATION 101

EXPANSION SLEEVE

MATERIAL - HEAT TREATED STEEL AISI 1030 OR 1035

FILLER SLEEVE

MATERIAL - HEAT TREATED STEEL AISI 1137 OR 1141

COLLAR

MATERIAL - MILD STEEL

WASHER

PART NO.	GRIP LANGE MIN.	MAX.	"A"	"B"	"C"
RL-10-2	.093	.156	2-11/32	1-3/32	5/16
-3	.157	.219	2-13/32	1-5/32	3/8
-4	.220	.281	2-15/32	1-7/32	7/16
-5	.282	.344	2-17/32	1-9/32	1/2
-6	.345	.406	2-19/32	1-11/32	9/16
-7	.407	.469	2-21/32	1-13/32	5/8
-8	.470	.531	2-23/32	1-15/32	11/16
-9	.532	.594	2-25/32	1-17/32	3/4
-10	.595	.656	2-27/32	1-19/32	13/16
-11	.657	.719	2-29/32	1-21/32	7/8
-12	.720	.781	2-31/32	1-23/32	15/16
-13	.782	.844	3-1/32	1-25/32	1
-14	.845	.906	3-3/32	1-27/32	1-1/16
-15	.907	.969	3-5/32	1-29/32	1-1/8
-16	.970	1.031	3-7/32	1-31/32	1-3/16
-17	1.032	1.094	3-9/32	2-1/32	1-1/4
-18	1.095	1.156	3-11/32	2-3/32	1-5/16

© signs disclosed therein, and the technical data and engineering
e the exclusive property of the Huck Manufacturing Company.
l to Huck upon written request and is not to be reproduced in
o anyone else without the express written consent of Huck.
evice shown in this drawing covered by Huck U.S. Patents Nos.
754,703. Subject devices not to be manufactured, used or sold

JUN 2

CHANGES

590

DRILLING PROCEDURE				HUCK MFG. CO. DRIVING TOOLS
CLEARANCE FIT		TIGHT FIT		
PRE DRILL.	SIZE DRILL	PRE DRILL	SIZE DRILL	HUCK 126 OR HUCK 353 WITH BL-10 NOSE
21/64 .328	"S" .348	21/64 .328	11/32 .3437	

	"C"
/32	5/16
/32	3/8
/32	7/16
/32	1/2
/32	9/16
/32	5/8
/32	11/16
/32	3/4
/32	13/16
/32	7/8
/32	15/16
/32	1
/32	1-1/16
/32	1-1/8
/32	1-3/16
/32	1-1/4
/32	1-5/16

signs disclosed therein, and the technical data and engineering
e the exclusive property of the Huck Manufacturing Company.
to Huck upon written request and is not to be reproduced in
o anyone else without the express written consent of Huck.
evice shown in this drawing covered by Huck U.S. Patents Nos.
754,703. Subject devices not to be manufactured, used or sold

★ STAMP
★ ETCH

JUN 25 1958

CHANGES			
	B	PLATING REVISED	4-22-58
	C	REVISED	2-21-58
	B	QQ-P-416 TYPE 1 CLASS C	9-30-57
	A	REVISED	6-25-57
	LET.	WAS	DATE

HUCK MANUFACTURING CO

[fol. 1189] IN THE UNITED STATES DISTRICT COURT FOR THE EASTERN DISTRICT OF MICHIGAN

GOVERNMENT'S EXHIBIT No. 74

HUCK MANUFACTURING COMPANY
Aircraft Riveting Processes
2480 Bellevue Avenue
Detroit 7, Michigan

July 9, 1954.

Mr. F. R. Dickenson,
The Townsend Company,
New Brighton, Pa.

Dear Dick:

It appears as though we are in the very last stages of negotiations for our Lockbolt License, and we want you to know how pleased we are that all going so well.

There is one point on which we should like to comment and that is your entry with the lockbolt into the airframe industry prior to the first anniversary of the license.

We see no harm, but only good, in your contacting the airframe industry in order to obtain necessary tests, evaluations and approvals before you start taking orders, and, under our interpretation of the contract as drafted, you are free to do so.

However, we can foresee possible conflict if your sales presentation were such that we may be blamed for holding back a second aircraft lockbolt source. Such a possible conflict could perhaps be prevented if you presented your samples for evaluation and approval to your potential customers with the understanding that your program for marketing the aircraft lockbolt is scheduled to start at a certain pre-determined date without giving further interlocking reasons for your plans.

We would rather not put our customer relations in jeopardy by being accused of holding back a source unnecessarily without feeling free to give complete reasons why, nor would we like to give a full explanation to your potential customers in this regard, in fairness to your marketing plans. Furthermore we feel that our contractural relationship is a completely private matter between our two

companies. We do not feel that the details need be known by anyone else.

With assurance from you on these points, we see no reason why the contract as written would prevent you from carrying out your basic objectives.

[fol. 1190] Dick, it looks as if we are about to enter into a mutually enjoyable and profitable relationship which I am sure will continue for many years. It is my sincere hope that our two companies can develop this lockbolt business between us so that there will never be a need for a third source which, as you know, we both definitely do not want.

If there is ever a question or doubt in your mind on any subject, please feel free to contact me immediately so that our mutual understanding will always be open and clear. I quite agree with your psychology that you and I will be the contact for the two companies, and that our policies will be carried out by our respective Sales Organizations.

With kindest personal regards,

Sincerely, —, —.

AWA:s

Copies (not shown) to: Mr. Benkert, Mr. Dobbe, Mr. Looker, Mr. Reynolds, Mr. Stern, Mr. Sterritt.

[fol. 1190a] July 12, 1954. Sales Dept., Huck Mfg. Co.

[fol. 1191] AGREEMENT AMENDMENT

Whereas, on the 26th day of September, 1956, the Huck Manufacturing Company and Pheoll Manufacturing Company entered into a License Agreement; and

Whereas, Pheoll Manufacturing Company has legally changed its name to Voi-Shan Industries, Inc., having as its address 650 South Grand Avenue, Los Angeles 17, California.

It is agreed that said Agreement be and is hereby amended to indicate such change of name and to substitute throughout the name of Voi-Shan Industries, Inc. for Pheoll Manufacturing Company and also to indicate that the address of Voi-Shan is 650 South Grand Avenue, Los Angeles 17, California.

Huck Manufacturing Company Alfred E. Benkert, Ex Vice President.

Attest: L. B. Fielder, Asst. Secretary.

Voi-Shan Industries, Inc., Mason Phelps, President.

Attest: G. R. Bartolme, Secretary.

[fol. 1192] IN THE UNITED STATES DISTRICT COURT FOR THE EASTERN DISTRICT OF MICHIGAN

GOVERNMENT'S EXHIBIT No. 76

September 26, 1956.

AGREEMENT

This Agreement, made at Detroit, Michigan, this 26th day of September, 1956, between Huck Manufacturing Company, a corporation of Michigan, having its principal place of business at 2480 Bellevue Avenue, Detroit, Michigan (hereinafter referred to as "Huck"), and Pheoll Manufacturing Company, a corporation of Illinois, having its principal place of business at 5700 Roosevelt Road, Chicago 50, Illinois (hereinafter referred to as "Pheoll");

★ STAMP
★ ETCH

JUN 25 1958

CHANGES			
B	PLATING REVISED	4-22-58	
C	REVISED	2-21-58	
B	QQ-P416 TYPE I CLASS C	9-30-57	
A	REVISED	6-25-57	
LET.	WAS	DATE	

HUCK MANUFACTURING CO.
2480 BELLEVUE AVE.
DETROIT 7, MICH., U. S. A.

TITLE
COORDINATION DWG. OF
BL-10 5/16 BLIND HUCK BOLT

MATERIAL

HEAT TREATMENT

SCALE ~ =1 FT.
DATE 11-27-56
DR. BY RALLIN
CH. BY
APP. BY

BL-10

INDEX NUMBER
148

EXHIBIT A.

Restrictions:
This drawing, the structural designs disclosed therein, and the technical data and engi
service represented thereby are the exclusive property of the Huck Manufacturing Co
This drawing is to be returned to Huck upon written request and is not to be reprod
whole or in part or disclosed to anyone else without the express written consent of
Manufacture, use and sale of device shown in this drawing covered by Huck U.S. Pate
2,531,048, 2,531,049, and 2,754,703. Subject devices not to be manufactured, used
in violation of above patents.

FILLER SLEEVE

MATERIAL - HEAT TREATED STEEL AISI 1137 OR 1141

COLLAR

MATERIAL - MILD STEEL

WASHER

MATERIAL - NAS-143-4

ALL COMPONENT PARTS OF THE BLIND HEX-BOLT ARE CADMIUM PLATED PER QQ-P-416 TYPE I CLASS 3. COLLAR HAS (B) DICHROMATE POST TREATMENT PER QQ-P-416 TYPE II CLASS 3

-12	.720	.781	2-31/32	1-23/32	1 5/16
-13	.782	.844	3-1/32	1-25/32	1
-14	.845	.906	3-3/32	1-27/32	1-1/16
-15	.907	.969	3-5/32	1-29/32	1-1/8
-16	.970	1.031	3-7/32	1-31/32	1-3/16
-17	1.032	1.094	3-9/32	2-1/32	1-1/4
-18	1.095	1.156	3-11/32	2-3/32	1-5/16
-19	1.157	1.219	3-13/32	2-5/32	1-3/8
-20	1.220	1.281	3-15/32	2-7/32	1-7/16
-21	1.282	1.344	3-17/32	2-9/32	1-1/2
-22	1.345	1.406	3-19/32	2-11/32	1-9/16
-23	1.407	1.469	3-21/32	2-13/32	1-5/8
-24	1.470	1.531	3-23/32	2-15/32	1-11/16

Restrictions:
This drawing, the structural designs disclosed therein, and service represented thereby are the exclusive property of Huck. This drawing is to be returned to Huck upon written request or in part or disclosed to anyone else without written consent. Manufacture, use and sale of device shown in this drawing under U.S. Pat. Nos. 2,531,048, 2,531,049, and 2,754,703. Subject devices to validation of above patents.

FRACTIONAL DIMENSIONS
TO BE HELD ± .010

Witnesseth:

Whereas, Huck is the owner of the following United States Letters Patent and applications for Letters Patent relating to lockbolt devices which are two-part fastening devices including a pin or stump and collar, and in which the collar is swaged into locking grooves in the pin or stump simultaneously with the setting of the fastener, such devices being hereinafter referred to as "lockbolt devices";

Patent No. 2,527,307, granted 10-24-50 for "Rivet and Method of Riveting".

Patent No. 2,531,048, granted 11-21-50 for "Fastening Device".

Patent No. 2,531,049, granted 11-21-50 for "Fastening Device".

Patent No. 2,754,703, granted 7-17-56 for "Method of Fastening".

Application Serial No. 378,897, filed 9-8-53, for "Lockbolt Collar".

Application Serial No. 427,719, filed 5-5-54, for "Lockbolt Construction".

Whereas, Huck is engaged in the manufacture and sale of said lockbolt devices (pins and collars) covered by said Letters Patent, including lockbolt stumps (Exhibits 1 and 2 attached hereto as illustrative);

[fol. 1193] Whereas, Pheoll desires a limited, nonexclusive license to manufacture and sell such lockbolt devices only when made of titanium or titanium alloys (referred to hereinafter as "titanium") and Huck is desirous of licensing Pheoll for the manufacture and sale of such titanium lockbolt devices; and

Whereas, Pheoll has or will obtain the manufacturing and sales facilities for the manufacture and sale of said titanium lockbolt devices;

Now, Therefore, in consideration of the mutual covenants and agreements hereinafter contained, it it agreed by and between the parties hereto as follows:

1. Huck hereby grants to Pheoll a limited, nonexclusive right and license under the aforesaid United States Letters Patent and applications for Letters Patent, including Letters Patent and applications for Letters Patent on im-

provements on said lockbolt devices and substitutes therefor of the same type of lockbolt devices, to manufacture, use and sell titanium lockbolt devices covered by the claims in said Letters Patent and any Letters Patent that may issue on said applications for Letters Patent, and to practice the methods claimed therein. This license also applies to titanium lockbolt devices covered by any renewals, continuations, divisions of, or substitutes for, said applications for Letters Patent, and also any reissues or extensions of any of said Letters Patent. This license is limited to lockbolt devices manufactured from titanium.

2. Pheoll agrees to pay to Huck:

(a) The sum of Fifteen Thousand Dollars ($15,000.00) upon execution of this agreement.

[fol. 1194] (b) A royalty of five per cent (5%) on the net selling price of all lockbolt devices, (pins, stumps and/or collars) manufactured and sold by Pheoll which are covered in the manufacture, use or sale thereof by any claim of any of the Letters Patent licensed herein and on the net selling price of all lockbolt stumps incorporating the design features of Exhibits 1 and 2. By "net selling price" the parties hereto mean the net selling price of lockbolt devices (pins, stumps and/or collars) charged by Pheoll, less all normal discounts allowed and taken, according to accepted accounting practice. Lockbolt devices licensed herein and sold to Huck, or other licensees of Huck, designated in writing by Huck, shall not be subject to royalty.

Royalty

3. Pheoll shall keep proper books of account showing sales of lockbolt devices under this agreement, and agrees to report to Huck by the twentieth of each month the lockbolt devices sold by it during the preceding month, tabulating in such report the diameter, grip, headstyle and titanium alloy of pieces sold, together with the number of pieces in each category and the dollar amount, for the month being reported. Lockbolt devices shall be considered sold when billed out or, if not billed out, when delivered or paid for before delivery. In computing sales of lockbolt devices credit shall be given for returned lockbolt devices. Lockbolt devices which are given out as samples without charge to the customer shall not be subject to royalty.

Payment and reports

4. Within twenty (20) days following the last day of August, November, February and May, Pheoll will submit a written statement [fol. 1195] giving the total sales of lockbolt devices subject to royalty under this agreement for the quarter being reported, and accompany such quarterly report with payment of the royalty then due.

5. Huck shall have access to the books and records of Pheoll at all reasonable times to check the amount of sales of lockbolt devices made hereunder by Pheoll from time to time, provided, however, that Pheoll may, at its election, substitute for Huck's examination a certificate of a mutually agreed upon firm of certified public accountants as to the amount of said sales and as to any other figures that will determine the amount of royalties payable thereon. Huck will not require an examination or such certified statement more often than once a year.

6. In the event that Pheoll fails to comply with the terms of reports and royalty payments specified herein, and so often as the same shall happen, or breaches any other material provisions of this agreement, Huck may, at its option, by giving sixty (60) days' notice in writing, specifying the breach complained of, terminate this agreement and the license granted hereby, provided, however, that if the breach complained of shall be corrected by Pheoll within thirty (30) days after the mailing of said notice, then this agreement shall remain in full force and effect.

Minimum royalties

7. It is agreed that, for the first year of this agreement, no minimum royalties are required. However, beginning with the second year of this agreement, computed from the anniversary date hereof, [fol. 1196] in the event that Pheoll has not paid to Huck by the end of the reporting period for the second year an amount of Fifteen Thousand Dollars ($15,000.00) for the second year and Fifteen Thousand Dollars ($15,000.00) for each succeeding year thereafter in earned or unearned royalties, then Huck may, at its option, terminate this license by notice as provided in Paragraph 6.

8. Pheoll hereby grants to Huck a nonexclusive, royalty-free license on any improvements on lockbolt devices of any material made or acquired by Pheoll during the life of

this agreement coming within the claims of the licensed patents, or lockbolt devices of any material and of the same type which are substitutes for the lockbolt devices licensed herein by Huck.

9. For lockbolt devices sold by Pheoll as Huck equals, Pheoll agrees to maintain Huck's quality for full equivalence in shear, tension and fatigue, for aircraft shear and tension allowables as defined or as may be defined by ANC5 Manual and any other government regulatory specification, and for commercial lockbolt devices typical strength properties defined in Huck-published commercial lockbolt engineering bulletins, which Huck agrees to supply to Pheoll.

10. Pheoll agrees to suitably identify the lockbolt devices as manufactured and sold by it to distinguish from the lockbolt devices manufactured and sold by Huck, and other Huck licensees, the manner of so distinguishing the lockbolt devices to be mutually determined hereinafter.

11. Notice as herein provided shall be in writing and shall mean the placing of the notice in the mails, registered-[fol. 1197] return, postage prepaid, to the party being notified at the address above given, or at such other address designated by the parties hereto, or by otherwise delivering to the other party such notice.

12. The license herein granted is nontransferable without the written consent of Huck first had and obtained, except to the successors of the entire fastener business of Pheoll, and this agreement shall be binding upon, and inure to the benefit of, any such transferee of Pheoll and the successors and assigns of Huck.

13. Unless previously terminated in accordance with the terms hereof, this agreement and the license herein granted shall extend for the full term of the United States Letters Patent which are or may be included in this agreement, and shall terminate at the expiration of the last to expire of said patents.

14. Huck agrees to furnish Pheoll without compensation with complete manufacturing and tooling knowhow, including all methods, procedures and reports, it now has or later acquires with respect to the manufacture, testing, research, development, production and use of, or relating to said licensed titanium lockbolt devices.

15. Pheoll agrees to furnish Huck alone (except to others to whom Pheoll may be already under contractual obligation to furnish) without compensation with complete manufacturing and tooling knowhow, including all methods, procedures and reports, it now has or later acquires with respect to the manufacture, testing, research, development, production and use of, or relating to said licensed titanium lockbolt devices.

[fol. 1198] 16. If Huck has granted, or at any time hereafter grants, a license for the United States to another to manufacture, use and sell the titanium lockbolt devices licensed herein under terms or conditions more favorable than those of the license herein granted, Pheoll shall be promptly notified and entitled to have such more favorable license in its entirety. However, this shall not apply to any licenses granted by Huck in settlement or compromise of any interference in the United States Patent Office or any infringement litigation in the United States courts.

17. In the event that a court of final jurisdiction holds any of the claims of any United States Letters Patent licensed by Huck to Pheoll hereunder invalid, then Pheoll shall thereafter be permitted to make, use and sell licensed lockbolt devices, and practice any licensed method, covered by the claim or claims so held to be invalid and not covered by any other claim or claims of a patent licensed by Huck to Pheoll hereunder, free and clear of any of the stipulations and covenants of this agreement, including the payment of royalty.

18. Pheoll agrees to properly affix the necessary statutory patent notices to all of the containers within which the lockbolt devices herein licensed are shipped and to include in all Pheoll advertisements and standard drawings relating thereto similar notices; such notices to include the legend "Licensed under the following Huck patents:", to be followed by a list of the aforesaid patents and other patents as they issue and become a part of this license.

[fol. 1199] 19. That in the event Pheoll becomes insolvent or executes an assignment for the benefit of creditors or files a petition in bankruptcy, or has a petition in bankruptcy filed against it, Huck may terminate this agreement by giving notice thereof to Pheoll.

20. After this agreement has been in effect for five (5) years Pheoll may thereafter at its option surrender its licence hereunder by one (1) year's notice to Huck.

21. This agreement shall be construed under the laws of Michigan.

Signed at Chicago, in the County of Cook and State of Illinois this 26th day of September, 1956.

Huck Manufacturing Company, By A. W. Armour III, Its President.

Attest: Louis B. Fielder, Its Assistant Secretary.

Signed at Chicago, in the County of Cook and State of Illinois, this 26th day of September, 1956.

Pheoll Manufacturing Company, By Mason Phelps, Its President.

Attest: R. O. Lyon, Its Assistant Secretary-Assistant Treasurer.

BRUNING 45065

393

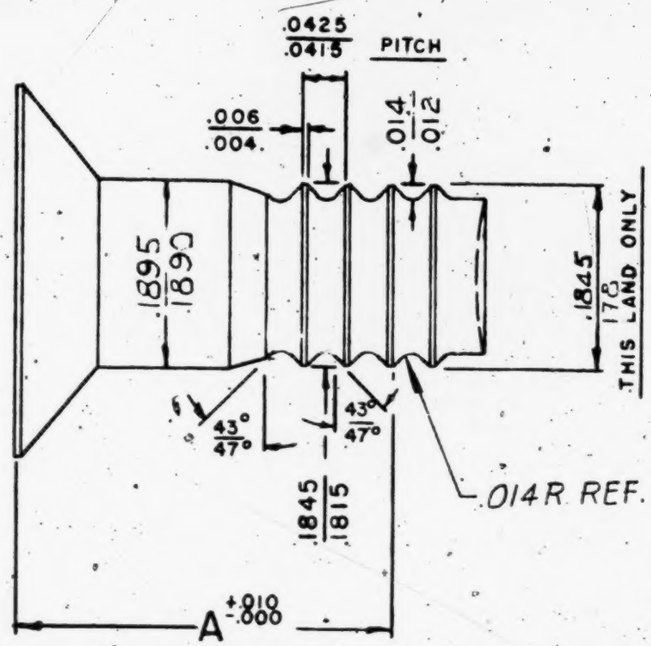

FOR REFERENCE ONLY

GRIP No	A
ABSCT-509 P6-2	.305
3	.367
4	.430
5	.492
6	.555
7	.617
8	.680
9	.742
10	.805
11	.867
12	.930
13	.992
14	1.055
15	1.117
16	1.180
17	1.242
18	1.305
19	1.367
20	1.430
21	1.492

GRIP No	A
ABSCT 509 P6-22	1.555
23	1.617
24	1.680
25	1.742
26	1.805
27	1.867
28	1.930
29	1.992
30	2.055
31	2.117
32	2.180
33	2.242
34	2.305
35	2.367
36	2.430
37	2.492
38	2.555
39	2.617
40	2.680
41	2.742

GRIP No	A
ABSCT 509 P6-42	2.805
43	2.867
44	2.930
45	2.992
46	3.055
47	3.117
48	3.180
49	3.242
50	3.305
51	3.367
52	3.430
53	3.492
54	3.555
55	3.617
56	3.680

FRACTIONAL DIMENSIONS TO BE HELD ±.010

SEQUENCE OF OPERATION

COLD HEAD
GRIND
ROLL
HEAT TREAT AS PER WORK ORDER
LUBRICATE STOCK

SEP 19 1956

CHANGES

LET.	WAS	BY	DATE

HUCK MANUFACTURING CO.
2480 BELLEVUE AVE.
DETROIT 7, MICH., U.S.A.

TITLE
ASCT 509-P6

MATERIAL TITANIUM RC 130 AM
HEAT TREATMENT

SCALE — =1 FT
DATE 5-3-56
DR. BY G.J.V.
CH. BY
APP. BY

INDEX NUMBER
393

Exhibit 1

389

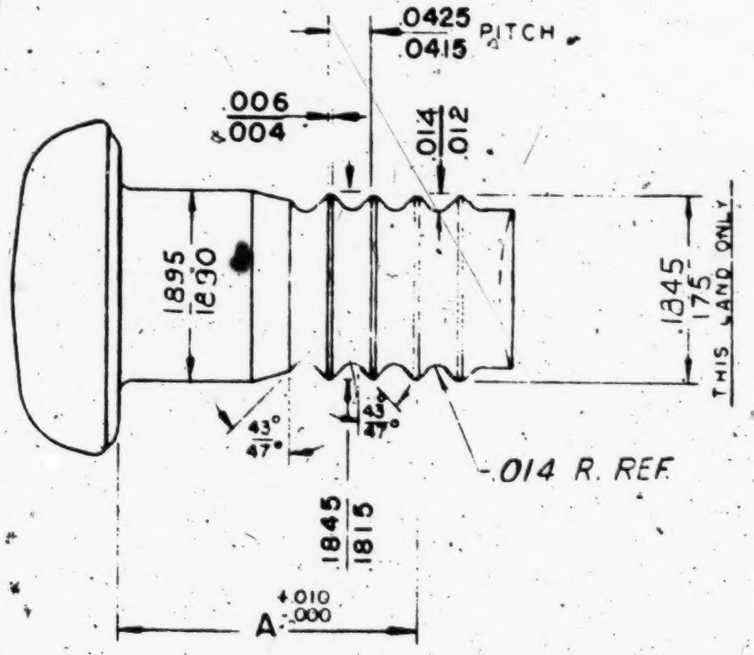

SEQUENCE OF OPERATION

COLD HEAD
GRIND
ROLL
HEAT TREAT AS PER WORK ORDER
LUBRICATE
STOCK

FOR REFERENCE ONLY

SEP 19 1956

GRIP Nº	A
ALSFP6- 1	.242
2	.305
3	.367
4	.430
5	.492
6	.555
7	.617
8	.680
9	.742
10	.805
11	.867
12	.930
13	.992
14	1.055
15	1.117
16	1.180
17	1.242
18	1.305
19	1.367
20	1.430

GRIP Nº	A
ALSFP6-21	1.492
22	1.555
23	1.617
24	1.680
25	1.742
26	1.805
27	1.867
28	1.930
29	1.992
30	2.055
31	2.117
32	2.180
33	2.242
34	2.305
35	2.367
36	2.430
37	2.492
38	2.555
39	2.617
40	2.680

GRIP Nº	A
ALSFP6-41	2.742
42	2.805
43	2.867
44	2.930
45	2.992
46	3.055
47	3.117
48	3.180
49	3.242
50	3.305
51	3.367
52	3.430
53	3.492
54	3.555
55	3.617
56	3.680

FRACTIONAL DIMENSIONS TO BE HELD .010

CHANGES

LET	MAD	DATE

HUCK MANUFACTURING CO
2480 DELLEVUE AVE
DETROIT 7 MICH U S A

TITLE
ALSF-P6

MATERIAL TITANIUM RC130AM
HEAT TREATMENT

SCALE 4/1 1 FT
DATE 5-2-56
DR. BY G. J. V.
CH. BY [illegible]
APPR BY

INDEX NUMBER
389

Exhibit 2

BLANK PAGE

[fol. 1202] IN THE UNITED STATES DISTRICT COURT FOR THE EASTERN DISTRICT OF MICHIGAN

GOVERNMENT'S EXHIBIT No. 77

September 28, 1956.

AGREEMENT

This Agreement, made at Detroit, Michigan, this 4th day of October, 1956, between Huck Manufacturing Company, a corporation of Michigan, having its principal place of business at 2480 Bellevue Avenue, Detroit, Michigan (hereinafter referred to as "Huck"), and Standard Pressed Steel Company, a corporation of Pennsylvania, having its principal place of business at Jenkintown, Pennsylvania, (hereinafter referred to as "Standard");

Witnesseth:

Whereas, Huck is the owner of the following United States Letters Patent and applications for Letters Patent relating to lockbolt devices which are two-part fastening devices including a pin or stump and collar, and in which the collar is swaged into locking grooves in the pin or stump simultaneously with the setting of the fastener, such devices being hereinafter referred to as "lockbolt devices";

Patent No. 2,527,307, granted 10-24-50 for "Rivet and Method of Riveting".

Patent No. 2,531,048, granted 11-21-50 for "Fastening Device".

Patent No. 2,531,049, granted 11-21-50 for "Fastening Device".

Patent No. 2,754,703, granted 7-17-56 for "Method of Fastening".

Application Serial No. 378,897, filed 9-8-53, for "Lockbolt Collar".

Application Serial No. 427,719, filed 5-5-54, for "Lockbolt Construction".

Whereas, Huck is engaged in the manufacture and sale of said lockbolt devices (pins and collars) covered by said

Letters Patent, including lockbolt stumps (Exhibits 1 and 2 attached hereto as illustrative);

[fol. 1203] Whereas, standard desires a limited non-exclusive license to manufacture and sell such lockbolt devices only when made of titanium or titanium alloys (referred to hereinafter as "titanium") and Huck is desirous of licensing Standard for the manufacture and sale of such titanium lockbolt devices; and

Whereas, Standard has or will obtain the manufacturing and sales facilities for the manufacture and sale of said titanium lockbolt devices;

Now, Therefore, in consideration of the mutual covenants and agreements hereinafter contained, it is agreed by and between the parties hereto as follows:

1. Huck hereby grants to Standard a limited, nonexclusive right and license under the aforesaid United States Letters Patent and applications for Letters Patent, including Letters Patent and applications for Letters Patent on improvements on said lockbolt devices and substitutes therefor of the same type of lockbolt devices, to manufacture, use and sell titanium lockbolt devices covered by the claims in said Letters Patent and any Letters Patent that may issue on said applications for Letters Patent, and to practice the methods claimed therein. This license also applies to titanium lockbolt devices covered by any renewals, continuations, divisions of, or substitutes for, said applications for Letters Patent, and also any reissues or extensions of any of said Letters Patent. This license is limited to lockbolt devices manufactured from titanium.

2. Standard agrees to pay to Huck:

(a) The sum of Fifteen Thousand Dollars ($15,000.00) upon execution of this agreement.

[fol. 1204] (b) A royalty of Five per cent (5%) on the net selling price of all lockbolt devices, (pins, stumps and/or collars) manufactured and sold by Standard which are covered in the manufacture, use or sale thereof by any claim of any of the Letters Patent licensed herein and on the net selling price of all lockbolt stumps incorporating the design features of Exhibits 1 and 2. By "net selling price" the parties hereto mean the net selling price of lockbolt devices (pins, stumps and/or collars) charged by Standard, less all normal discounts allowed and taken,

according to accepted accounting practice. Lockbolt devices licensed herein and sold to Huck, or other licensees of Huck, designated in writing by Huck, shall not be subject to royalty.

3. Standard shall keep proper books of account showing sales of lockbolt devices under this agreement, and agrees to report to Huck by the twentieth of each month the lockbolt devices sold by it during the preceding month, tabulating in such report the diameter, grip, headstyle and titanium alloy of pieces sold, together with the number of pieces in each category and the dollar amount, for the month being reported. Lockbolt devices shall be considered sold when billed out or, if not billed out, when delivered or paid for before delivery. In computing sales of lockbolt devices credit shall be given for returned lockbolt devices. Lockbolt devices which are given out as samples without charge to the customer shall not be subject to royalty.

4. Within twenty (20) days following the last day of August, November, February and May, Standard will [fol. 1205] submit a written statement giving the total sales of lockbolt devices subject to royalty under this agreement for the quarter being reported, and accompany such quarterly report with payment of the royalty then due.

5. Huck shall have access to the books and records of Standard at all reasonable times to check the amount of sales of lockbolt devices made hereunder by Standard from time to time, provided, however, that Standard may, at its election, substitute for Huck's examination a certificate of a mutually agreed upon firm of certified public accountants as to the amount of said sales and as to any other figures that will determine the amount of royalties payable thereon. Huck will not require an examination or such certified statement more often than once a year.

6. In the event that Standard fails to comply with the terms of reports and royalty payments specified herein, and so often as the same shall happen, or breaches any other material provisions of this agreement, Huck may, at its option, by giving sixty (60) days' notice in writing, specifying the breach complained of, terminate this agreement and the license granted hereby, provided, however, that if the breach complained of shall be corrected by Standard

within thirty (30) days after the mailing of said notice, then this agreement shall remain in full force and effect.

7. It is agreed that, for the first year of this agreement, no minimum royalties are required. However, beginning with the second year of this agreement, computed from the anniversary date hereof, in the event that Standard [fol. 1206] has not paid to Huck by the end of the reporting period for the second year an amount of Fifteen Thousand Dollars ($15,000.00) for the second year and Fifteen Thousand Dollars ($15,000.00) for each suceeding year thereafter in earned or unearned royalties, then Huck, may, at its option, terminate this license by notice as provided in Paragraph 6.

8. Standard hereby grants to Huck a non-exclusive, royalty-free license on any improvements on lockbolt devices of any material made or acquired by Standard during the life of this agreement coming within the claims of the licensed patents, or lockbolt devices of any material and of the same type which are substitutes for the lockbolt devices licensed herein by Huck.

9. For lockbolt devices sold by Standard as Huck equals, Standard agrees to maintain Huck's quality for full equivalence in shear, tension and fatigue, for aircraft shear and tension allowables as defined or as may be defined by ANC5 Manual and any other governmental regulatory specification, and for commercial lockbolt devices typical strength properties defined in Huck-published commercial lockbolt engineering bulletins, which Huck agrees to supply to Standard.

10. Standard agrees to suitably identify the lockbolt devices as manufactured and sold by it to distinguish from the lockbolt devices manufactured and sold by Huck, and other Huck licensees, the manner of so distinguishing the lockbolt devices to be mutually determined hereinafter.

11. Notice as herein provided shall be in writing and shall mean the placing of the notice in the mails, registered [fol. 1207] return, postage prepaid, to the party being notified at the address above given, or at such other address designated by the parties hereto, or by otherwise delivering to the other party such notice.

12. The license herein granted is nontransferable without the written consent of Huck first had and obtained,

except to the successors of the entire fastener business of Standard, and this agreement shall be binding upon, and inure to the benefit of, any such transferee of Standard and the successors and assigns of Huck.

13. Unless previously terminated in accordance with the terms hereof, this agreement and the license herein granted shall extend for the full term of the United States Letters Patent which are or may be included in this agreement, and shall terminate at the expiration of the last to expire of said patents.

14. Huck agrees to furnish Standard without compensation with complete manufacturing and tooling know-how, including all methods, procedures and reports, it now has or later acquires with respect to the manufacture, testing, research, development, production and use of, or relating to said licensed titanium lockbolt devices.

15. Standard agrees to furnish Huck alone (except to others to whom Standard may be already under contractual obligation to furnish) without compensation with complete manufacturing and tooling know-how, including all methods, procedures and reports, it now has or later acquires with respect to the manufacture, testing, research, development, production and use of, or relating to said licensed titanium lockbolt devices.

[fol. 1208] 16. If Huck has granted, or at any time hereafter grants, a license for the United States to another to manufacture, use and sell the titanium lockbolt devices licensed herein under terms or conditions more favorable than those of the license herein granted, Standard shall be promptly notified and entitled to have such more favorable license in its entirety. However, this shall not apply to any licenses granted by Huck in settlement or compromise of any interference in the United States Patent Office or any infringement litigation in the United States courts.

17. In the event that a court of final jurisdiction holds any of the claims of any United States Letters Patent licensed by Huck to Standard hereunder invalid, then Standard shall thereafter be permitted to make, use and sell licensed lockbolt devices, and practice any licensed method, covered by the claim or claims so held to be invalid and not covered by any other claim or claims of a patent licensed by Huck to Standard hereunder, free and

clear of any of the stipulations and covenants of this agreement, including the payment of royalty.

18. Standard agrees to properly affix the necessary statutory patent notices to all of the containers within which the lockbolt devices herein licensed are shipped and to include in all Standard advertisements and standard drawings relating thereto similar notices; such notices to include the legend "Licensed under the following Huck patents", to be followed by a list of the aforesaid patents and other patents as they issue and become a part of this license.

[fol. 1209] 19. That in the event Standard becomes insolvent or executes an assignment for the benefit of creditors or files a petition in bankruptcy, or has a petition in bankruptcy filed against it, Huck may terminate this agreement by giving notice thereof to Standard.

20. After this agreement has been in effect for five (5) years Standard may thereafter at its option surrender its license hereunder by one (1) year's notice to Huck.

21. This agreement shall be construed under the laws of Michigan.

Signed at Jenkintown, in the County of Montgomery and State of Pennsylvania this 4th day of October, 1956.

Huck Manufacturing Company, By A. W. Armour, III, Its President.

Attest: A. E. Benkert, Its Exec. Vice President.

Signed at Jenkintown, in the County of Montgomery and State of Pennsylvania, this 4th day of October, 1956.

Standard Pressed Steel Company, By James V. Lester, Its Treasurer.

Attest: W. I. Kryder, Its Secretary.

393

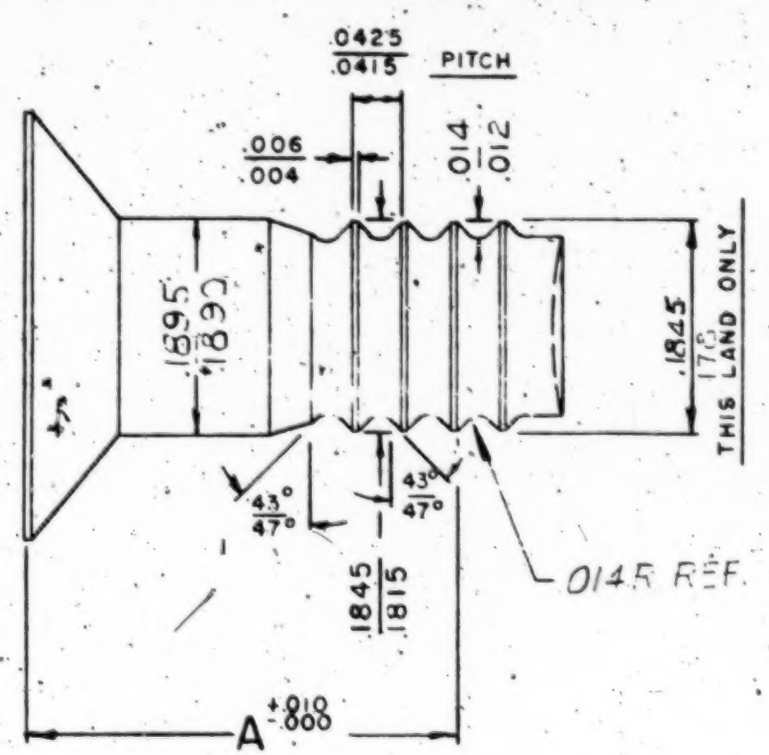

SEQUENCE OF OPERATION

COLD HEAD
GRIND
ROLL
HEAT TREAT AS PER WORK ORDER
LUBRICATE
STOCK

OCT -1 1956

GRIP No	A
ABSCT-509 P6-2	.305
3	.367
4	.430
5	.492
6	.555
7	.617
8	.680
9	.742
10	.805
11	.867
12	.930
13	.992
14	1.055
15	1.117
16	1.180
17	1.242
18	1.305
19	1.367
20	1.430
21	1.492

GRIP No	A
ABSCT 509 P6-22	1.555
23	1.617
24	1.680
25	1.742
26	1.805
27	1.867
28	1.930
29	1.992
30	2.055
31	2.117
32	2.180
33	2.242
34	2.305
35	2.367
36	2.430
37	2.492
38	2.555
39	2.617
40	2.680
41	2.742

GRIP No	A
ABSCT 509 P6-42	2.805
43	2.867
44	2.930
45	2.992
46	3.055
47	3.117
48	3.180
49	3.242
50	3.305
51	3.367
52	3.430
53	3.492
54	3.555
55	3.617
56	3.680

FRACTIONAL DIMENSIONS TO BE HELD ± .010

CHANGES

LET	WAS	BY	DATE

HUCK MANUFACTURING CO.
2480 BELLEVUE AVE.
DETROIT 7, MICH., U.S.A.

TITLE
ASCT 509-P6

MATERIAL TITANIUM RC 130 AM
HEAT TREATMENT

SCALE [illegible] = 1 FT
DATE [illegible]
DR BY [illegible]
CH BY [illegible]
APP BY

INDEX NUMBER
393

Exhibit 1

389

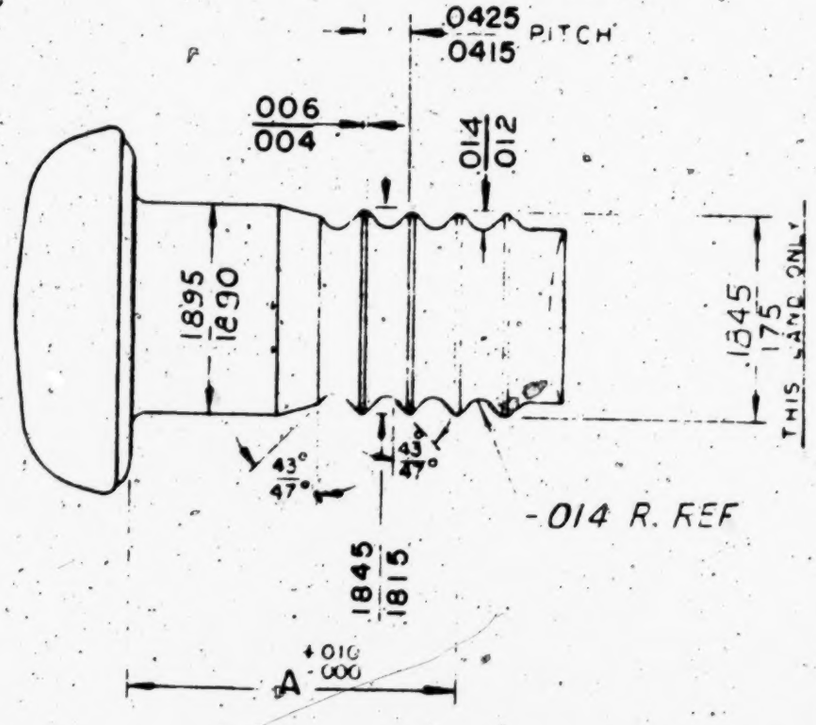

SEQUENCE OF OPERATION

COLD HEAD
GRIND
ROLL
HEAT TREAT AS PER WORK ORDER
LUBRICATE
STOCK

OCT -1 1956

GRIP No	A
ALSFP6- 1	.242
2	.305
3	.367
4	.430
5	.492
6	.555
7	.617
8	.680
9	.742
10	.805
11	.867
12	.930
13	.992
14	1.055
15	1.117
16	1.180
17	1.242
18	1.305
19	1.367
20	1.430

GRIP No	A
ALSFP6-21	1492
22	1.555
23	1.617
24	1680
25	1.742
26	1805
27	1867
28	1930
29	1992
30	2055
31	2117
32	2180
33	2242
34	2305
35	2367
36	2430
37	2492
38	2555
39	2617
40	2680

GRIP NO	A
ALSFP6-41	2742
42	2.805
43	2867
44	2930
45	2992
46	3055
47	3117
48	3180
49	3242
50	3305
51	3367
52	3430
53	3492
54	3555
55	3617
56	3680

FRACTIONAL DIMENSIONS TO BE HELD ± .010

CHANGES

HUCK MANUFACTURING CO
DETROIT MICH U.S.A.

TITLE

ALSF-P6

MATERIAL TITANIUM ROBCAM
HEAT TREATMENT

SCALE FULL
DATE 5-2-56
DR. G.J.
CH. BY
APPR.

INDEX NUMBER
389

Exhibit 2

[fol. 1212] IN THE UNITED STATES DISTRICT COURT FOR THE EASTERN DISTRICT OF MICHIGAN

GOVERNMENT'S EXHIBIT No. 78

FASTEX
Division of Illinois Tool Works
Des Plaines, Ill.

November 6, 1959.

Mr. A. Watson Armour, III,
316 South LaSalle Street,
Chicago, Illinois
Dear Watson:

I had the pleasure of talking with Mr. John Sterritt and Mr. Harold Brilmyer associated with your company about your interest in obtaining a license under some of our rivet patents.

We generally discussed the broad terms and provisions of such an agreement which would be invoked were your company to come up with a commercial product. In general we are disposed to re-establish a licensing arrangement with your company and one which we hope would be quite amicable.

During the course of this discourse, I suggested that your company might give further consideration to granting us a license under your lockbolt patents and I thought I would merely confirm this to you as Messrs. Brilmyer and Sterritt undoubtedly will be discussing this with you.

It is conceivable to me that if we were to give consideration to both of these programs jointly, it might permit the establishment of the friendly licensing arrangement referred to above on a more positive basis. Perhaps at your convenience and before this entire matter goes too far, we would have an opportunity to sit down and discuss this subject in a little greater detail.

Perhaps you could call me at your convenience and we may arrange to get together and discuss this whole subject.

Sincerely, Silas S. Cathcart, Vice President-General Manager.

Copies to: AEB, HGB, JCS, CBA, CQM.

[fol. 1213] IN THE UNITED STATES DISTRICT COURT FOR THE EASTERN DISTRICT OF MICHIGAN

GOVERNMENT'S EXHIBIT No. 79

HUCK MANUFACTURING COMPANY
Telephone Confirmation Record

Date: 4-21-59.

Call From:

Company: Townsend Company.

City-State: New Brighton, Pa.

Contact: Paul Horst.

Copies to: AWA, HGB, GQM, PJR, AMS, JCS, √ file f/u.

Message: Paul Horst called to talk about the large diameter lockbolt program.

1. They do not intend to spend the money at this time on a promotional program to sell the large diameter lockbolt in the construction industry.
In this connection they are talking about the 5/8", 3/4" and 1" diameters.

It is not their intent to tool up their headers for these diameters now to have any finished inventory.

They feel they are so far away from any appreciable market that to spend any money on this now would not be good judgment.

2. They have three headers at New Brighton that will head over 1/2" diameter (5/8" and 3/4") but these headers would be limited as to length of pin. This limitatation was not known at the moment, but they will clarify this in their forthcoming letter.

3. They can head blanks up to 1" diameter in their Dunn Steel plant at Plymouth, Michigan, however, they do not consider Dunn Steel in the problem.

[fol. 1214] 4. They understand their cost of the proposed joint advertising program would be $20,000.

They do not wish to go along, and have inquired "Where do we stand on this joint advertising program?"

5. They want us to tell them what is the minimum they must do so that we will not find it necessary to get a third licensee in the picture to cover the large diameters. They propose to be a token source only, but want to talk about this further if we are not entirely satisfied with this.

Received April 24, 1959, Harness, Dickey & Pierce, Detroit, Mich.

Attention of: J. C. S. √

A. E. Benkert.

svb

[fol. 1215] IN THE UNITED STATES DISTRICT COURT FOR THE EASTERN DISTRICT OF MICHIGAN

GOVERNMENT'S EXHIBIT No. 80

Total Annual Sales for Lockbolts and Blind Rivets in the U.S.A. and the Foreign Market

January 1, 1950–September 14, 1960

Sales in the U.S.A.	Lockbolts	Blind Rivets
1950	$ 433,795.14	$ 84,726.09
1951	1,444,834.55	264,990.96
1952	1,384,213.78	430,952.22
1953	1,250,626.64	270,533.87
1954	1,675,104.83	278,349.10
1955	2,659,130.77	577,187.68
1956	3,500,340.80	685,547.71
1957	5,036,785.03	622,478.53
1958	4,405,148.46	499,417.54
1959	5,530,418.32	666,291.40
1960	3,577,720.96	367,297.54
Total	$30,898,119.28	$ 4,747,772.64
Sales in the Foreign Market		
1950	$ 5,397.83	$ 3,664.41
1951	57,070.64	880.44
1952	147,937.54	7,285.60
1953	135,338.38	26,553.30
1954	38,126.02	21,573.40
1955	14,100.47	16,070.87
1956	73,626.46	46,874.35
1957	138,327.86	27,777.95
1958	159,670.76	32,896.68
1959	214,220.46	23,168.38
1960	228,034.47	12,302.49
Total	$ 1,211,850.89	$ 219,047.87

[fol. 1216] IN THE UNITED STATES DISTRICT COURT FOR THE EASTERN DISTRICT OF MICHIGAN

GOVERNMENT'S EXHIBIT No. 82

HUCK MANUFACTURING COMPANY
Specialists in Cold Heading
Riveting and Fastening Processes
2480 Bellevue Avenue
Detroit 7, Michigan

July 23, 1956.

Mr. F. R. Dickenson, President,
Townsend Company,
New Brighton, Pennsylvania.

Dear Dick:

A review of our respective methods of introducing non-standard and special Huckbolts to the market indicates a need for closer control and liaison.

At the present time either of our companies can introduce a slight deviation to a standard product which could obsolete large stocks of standard products for the other.

It is recommended that you give consideration to a reciprocating agreement where deviations and specials not otherwise released by Huck be discussed with us prior to offering for sale and we disclose the same information to your company. By doing this, we can assure both yourself and ourselves that neither will introduce deviations which may result in costly stock obsolescence.

May we have comments on this matter.

Very truly yours, Huck Manufacturing Company, George Q. Mathews, Vice President in Charge of Sales.

GQM:mb

cc: Armour, C. Armour, Benkert, Braund, Brilmyer, Paul Horst, Sterritt, File.

[fol. 1217] IN THE UNITED STATES DISTRICT COURT FOR THE EASTERN DISTRICT OF MICHIGAN

GOVERNMENT'S EXHIBIT No. 83

HUCK MANUFACTURING COMPANY
Departmental Correspondence

September 14, 1956.

Subject: Townsend Price Changes.

To: Mr. A. E. Benkert.

Copies: File.

From: G. Q. Mathews.

Would you arrange with Townsend to make new prices effective October ~~9~~, (11), 1956.

If they agree would you please call Hubert and tell him the effective date to use on literature he now has.

I have released everything to Hubert except commercial Huckbolts and will give him that Monday. If he is ready to go to print on any of the price lists they should go ahead. It will not be necessary to hold for my return.

(Letter released September 18, 1956)

Would you and Mr. Armour consider releasing our letter about one week ahead of effective date. This could assist in softening the price in effect at time of shipment and even if we did get a flurry of orders, it would be helpful as we have a high inventory and low backlog.

Will discuss further this week end, or I can be reached at the Biltmore Hotel in Dayton, Ohio.

Regards, George Q. Mathews.

GQM:ht

New Prices & Price Changes.

G. J. #64: October 24, 1961, M.L.L.

[fol. 1218] IN THE UNITED STATES DISTRICT COURT FOR THE EASTERN DISTRICT OF MICHIGAN

GOVERNMENT'S EXHIBIT No. 84

Mail Tues. 25th

September 14, 1956.

cc: Mr. A. Armour, Mr. Benkert

Proposed Letter to All Huck Customers

Many of our customers have requested that Huck adopt freight allowed as part of our Standard Terms of Purchase. We are now ready to announce such a policy.

Effective with all shipments on and after October 1, 1956, the following terms will apply:

Blind Rivets

All prices are subject to Huck Manufacturing Company's Standard terms of ½ of 1%, ten days—net 30 days, f.o.b. shipping point, freight allowed on 50 lbs. or more via carrier of our choice.

Huckbolts and Collars:

All prices are subject to Huck Manufacturing Company's standard terms of ½ of 1%, ten days—net 30 days, f.o.b. shipping point, freight allowed on 100 lbs. or more via carrier of our choice. The steel and aluminum general price increases plus the added increased labor and supply costs force us to adjust our selling prices.

Orders presently on hand and scheduled for delivery will be invoiced at present quoted prices and shipped f.o.b. (shipping point) freight allowed if the scheduled shipment qualifies under the new terms as outlined above. Orders received on and after October 9 (1), 1956, will be accepted at new adjusted prices and will be invoiced under terms of, "price in effect at time of shipment", freight allowed as outlined previously. Revised price sheets are being printed and will be forwarded at an early date. We appreciate your cooperation and look forward to being of greater service to you in the future.

[fol. 1219] IN THE UNITED STATES DISTRICT COURT FOR THE EASTERN DISTRICT OF MICHIGAN

GOVERNMENT'S EXHIBIT No. 85

HUCK MANUFACTURING COMPANY
Departmental Correspondence

Date: September 25, 1956.

Subject: Price Adjustment—Pricing Policy—Effective October 1, 1956.

To: All Engineering Representatives.

From: G. Q. Mathews.

Copies: A. W. Armour, Benkert, Messer, Tenny, Kruse, Westrick, Welsh, Albritton, Brilmyer, Van Hecke.

File: C. Armour, Dobbe.

You will please carefully read and note all the information contained in the attached enclosures.

Contained herein are copies of each of the following:

1. A letter to our customers—subject: Price Adjustment.
2. An amendment that will supplement our existing quotation and acknowledgment forms 5-144 and 5-146.
3. One copy each of the adjusted standard parts price lists. Price lists of non-standard parts will follow.

This information was mailed to you via air mail on September 25, 1956. The letter to the customers was mailed to your customers via first class mail on September 25, 1956.

You will note that the new printed price lists will be separated into categories according to materials—either aluminum or steel.

Effective October 1st, Western prices will prevail in the following states regardless of shipping point and without exception:

Washington
Oregon

California
Idaho
Nevada
Utah
Arizona

In the letter to our customers entitled "Price Adjustment", carefully note paragraph 4 under "Huckbolts And Collars", which states:

> Orders received on and after October 1, 1956, will be accepted at new adjusted prices and will be invoiced under terms of, "price in effect at time of shipment", freight allowed as outlined previously.

[fol. 1220] Our freight allowed policy does not permit the grouping of blind rivets with Huckbolts and/or Collars to meet minimum shipping weight qualifications.

Your strict adherence to the policies defined herein is expected without exception.

Best regards, George Q. Mathews (EK)

GQM/by

cc: Adams, Black, Jones, Miller, Butt, Strother, Rufi, Unfried, Brackeen, Villacres, Steele, Wild, Upton, Walsh, Darling, Bortner, Clute, Hunt, DeLoach, Hicks, Egnot, Hanneman, Newton, Salogga, Miner, Huegin, Crook, Proffitt, Morgan, Gillespie, Perran, Thomson.

[fol. 1220a] HUCK MANUFACTURING COMPANY

Revised General Conditions

Clause 2 Prices—Effective October 1, 1956, Item #2 of our "General Conditions" on the reverse side of the attached acknowledgment or quotation is amended in its entirety to read as follows:

All prices are subject to Huck Manufacturing Company's standard terms of ½ of 1%, 10 days—net 30 days, f.o.b. shipping point. Freight allowed on 100# or more of Huckbolt Pins and/or Collars or 50# or more of blind fasteners via truck or railroad carrier of our choice (where in either instance such minimum shipments are scheduled for shipment at one time).

Prices in effect at date of shipment shall apply.

Clause 7 Extras—Item #7 of the attached "General Conditions" is amended in its entirety to read as follows:

Sales, use, excise, or other levied taxes to be paid by the customer will be itemized separately on invoices.

Charges for requested prepaid transportation on shipments which do not qualify for freight allowance will be itemized separately on invoices.

Applicable to Form 5-144 and Form 5-146.

[fol. 1221] IN THE UNITED STATES DISTRICT COURT FOR THE EASTERN DISTRICT OF MICHIGAN

GOVERNMENT'S EXHIBIT No. 86

HUCK MANUFACTURING COMPANY
Specialists in Cold Heading
Riveting and Fastening Processes
2480 Bellevue Avenue
Detroit 7, Michigan

September 25, 1956.

To our Customers:

Subject: Price Adjustment

Many of our customers have requested that Huck adopt freight allowed as a part of our Standard Terms of Purchase. We are now ready to announce such a policy.

Effective with all shipments on and after October 1, 1956, the following terms will apply:

Blind Rivets

All prices are subject to Huck Manufacturing Company's standard terms of ½ of 1% ten days—net 30 days, f.o.b. shipping point, freight allowed on 50 lbs. or more via carrier of our choice.

Huckbolts and Collars:

All prices are subject to Huck Manufacturing Company's standard terms of ½ of 1%, ten days—net 30 days, f.o.b. shipping point, freight allowed on 100 lbs. or more via carrier of our choice.

The steel and aluminum general price increases plus the added increased labor and supply costs force us to adjust our selling prices.

Orders presently on hand and scheduled for delivery will be invoiced at present quoted prices and shipped f.o.b. shipping point, freight allowed if the scheduled shipment qualifies under the new terms as outlined above.

Orders received on and after October 1, 1956, will be accepted at new adjusted prices and will be invoiced under

terms of, "price in effect at time of shipment", freight allowed as outlined previously.

Revised price sheets are being printed and will be forwarded at an early date.

We appreciate your cooperation and look forward to being of greater service to you in the future.

Very sincerely yours, Huck Manufacturing Company.

[fol. 1222] IN THE UNITED STATES DISTRICT COURT FOR THE EASTERN DISTRICT OF MICHIGAN

GOVERNMENT'S EXHIBIT No. 87

HUCK MANUFACTURING COMPANY
Departmental Correspondence

Date: September 10, 1957.

Subject: Price Adjustment Letter To Customer of August 30, 1957.

To: All Engineering Representatives.

From: Sales Department.

Copies: Messrs. Armour, Benkert, C. Armour, Mathews, Messer, Tenny, Villacres, Kruse, Westrick, Braund, Welch, File.

This memorandum is to advise that there *has not* been a change in price in the *Tau Bolt*. The price adjustment letter of August 30, 1957, was in error.

Please advise your customers.

Best regards, Sales Department.

/chm

To: Adams, Miller, Bortner, Butt, Clute, DeLoach, Dobbe, Egnot, Gibler, Gillespie, Hamann, Hanneman, Houston, Siers, Larrabee, Jarman, Huegin, Hunt, Morgan, Newton, Perran, Rufi, Sallen, Scott, Serra, Steele, Strother, Yorg, Thomson, Unfried, Brackeen, Oldson, Upton, Walsh, Wild, Young, Clinton, Reyle, Wilson.

[fol. 1223] HUCK MANUFACTURING COMPANY
Specialists in Cold Heading
Riveting and Fastening Processes
2480 Bellevue Avenue
Detroit 7, Michigan

August 30, 1957.

To Our Customers:

Subject: Price Adjustment

Effective September 1, 1957, a general price adjustment will be made on Huckbolt fasteners, Blind Huckbolt fasteners, Oversize Structural blind rivets, Tau Bolts, and Daisy blind rivets. This adjustment will reflect the general price increase of aluminum and steel, as well as cost of labor and supplies.

We are pleased to report that due to your increased acceptance of our various product lines, we have in some cases been able to effect a price reduction.

Some of the revised price sheets have been printed and a copy of each applicable to your needs is included. The balance of the applicable price sheets will be forwarded to you under separate mailing as soon as they are available from the printer.

We appreciate your cooperation and look forward to being of greater service to you in the future.

Very truly yours, Huck Manufacturing Company.

[fol. 1224] IN THE UNITED STATES DISTRICT COURT FOR THE EASTERN DISTRICT OF MICHIGAN

GOVERNMENT'S EXHIBIT No. 88

Date: November 7, 1956.

To: A. W. Armour.

From: A. E. Benkert.

Subject: Price Lists for Licensees.

Effective immediately, the transmittal of our standard published price lists to any licensees, will be handled by the writer.

All other information to be transmitted to licensees will be handled by Mr. Brilmyer as in the past.

A. E. Benkert.

cc: Braund, Brilmyer, Kruse, Mathews, Messer, Tenny, file.

[fol. 1225] IN THE UNITED STATES DISTRICT COURT FOR THE EASTERN DISTRICT OF MICHIGAN

GOVERNMENT'S EXHIBIT No. 89

HUCK MANUFACTURING COMPANY
Specialists in Cold Heading
Riveting and Fastening Processes
2480 Bellevue Avenue
Detroit 7, Michigan

January 14, 1957.

Townsend Company,
Cherry Rivet Division,
Santa Ana, California.

Attention: Mr. Glenn Graves

Dear Sir:

Enclosed are three copies of our non-stock Huckbolt Western Price Lists.

These are furnished as per request from Mr. Paul Horst of your New Brighton, Pennsylvania office.

Very truly yours, H. C. Braund.

cc: Paul Horst, A. W. Armour, A. E. Benkert, G. Q. Mathews.

[fol. 1226] IN THE UNITED STATES DISTRICT COURT FOR THE EASTERN DISTRICT OF MICHIGAN

GOVERNMENT'S EXHIBIT No. 90

HUCK MANUFACTURING COMPANY
Departmental Correspondence

Date: 4-19-57.

Subject: Price Lists for Commercial Huckbolt Pins.

To: A. E. Benkert.

From: H. C. Braund.

Copies: A. W. Armour, G. Q. Mathews, Westrick, P. Horst√, F. R. Dickenson, Chilcoat.

Attached are revised Eastern and Western price lists for the ½" Commercial Huckbolt Pins.

We have extended the price list to include grips 4 through 22 due to increased demand for the longer grips. This allows the customers to group for price benefit on the added grip lengths.

Our order departments and licensees are being advised of this change.

H. C. Braund.

[fol. 1227] IN THE UNITED STATES DISTRICT COURT FOR THE EASTERN DISTRICT OF MICHIGAN

GOVERNMENT'S EXHIBIT No. 91

HUCK MANUFACTURING COMPANY
Specialists in Cold Heading Riveting and Fastening Processes
2480 Bellevue Avenue
Detroit 7, Michigan

October 30, 1957.

EAS—What is effective date? October 22, 1957.

Mr. Paul Horst,
Assistant to the President,
The Townsend Company,
New Brighton, Pennsylvania.

Dear Paul:

Enclosed herewith are copies of our latest Eastern and Western prices on the following products:

Type 430 Stainless Steel Huckbolt Collars
¼" Dia. 3LC Huckbolt Collars
Type 321 Stainless Steel Commercial Huckbolt Pins

We are sending two sets of the Western prices to Mr. H. E. Chilcoat under separate cover.

If you need additional copies, please advise the writer.

Very truly yours, Huck Manufacturing Company,
H. C. Braund, Chief Cost Accountant.

HCB/1h
enc.

CC: A. W. Armour, A. E. Benkert, G. Q. Mathews, File.

[fol. 1228] IN THE UNITED STATES DISTRICT COURT FOR THE EASTERN DISTRICT OF MICHIGAN

GOVERNMENT'S EXHIBIT No. 92

HUCK MANUFACTURING COMPANY
Specialists in Cold Heading Riveting and Fastening Processes
2480 Bellevue Avenue
Detroit 7, Michigan

July 19, 1957.

Olympic Screw & Rivet Corporation,
11445 South Dolan Street,
Downey, California.

Attention: Mr. E. H. Stau, Vice President General Manager

Dear Ed:

Reference is made to your letter dated July 11, 1957, which was in reply to my letter, dated July 8, regarding our proposed meeting for August 3, 1957.

There apparently was a misunderstanding, as it is certainly not our intention, at the present time, to establish additional licensees for the manufacture and the distribution of the Huck Lockbolt.

Very truly yours, Huck Manufacturing Company,
George Q. Mathews, Vice President In Charge of Sales.

GQM/chm

[fol. 1229] IN THE UNITED STATES DISTRICT COURT FOR THE EASTERN DISTRICT OF MICHIGAN

GOVERNMENT'S EXHIBIT No. 93

HUCK MANUFACTURING COMPANY
2480 Bellevue Avenue
Detroit 7, Mich.

March 7, 1958.

Lockheed Aircraft Corporation,
Missile Systems Division,
Sunnyvale, California.

Subject: Terms and Conditions of Purchase

Attention: Mr. J. C. Stephens, Supervisor Purchasing Operations

Dear Mr. Stephens:

Reference is made to your letter dated January 16, 1957 regarding the above subject.

We have recently completed negotiations with your Mr. Warren Wright of the California Division of Lockheed, regarding the same subject.

Enclosed please find copy of this amendment which has been negotiated with Mr. Wright.

Your early consideration and confirmation of this agreement will be appreciated.

Very truly yours, Huck Manufacturing Company, George Q. Mathews, Vice President In Charge of Sales.

GQM/by

Encl.

Armour, Benkert, Reynolds, Stern, Clute, Scott, Westrick, Villacres, T & C File, File, Dickenson.

[fol. 1230] HUCK MANUFACTURING COMPANY
2480 Bellevue Avenue
Detroit 7, Mich.

March 7, 1958.

Lockheed Aircraft Corporation,
California Division,
Burbank, California.

Attention: Mr. Warren Wright, Purchasing Operations

Dear Mr. Wright:

It was indeed a pleasure visiting once again with you and your organization. We would like to thank you for the many courtesies extended Messrs. Clute, Huegin and myself during our recent visit.

In accordance with our verbal agreement we would like to amend the Terms and Conditions signed November 1, 1955 as follows:

Cancel amendment letters dated November 5, 1956, February 22, 1957 and November 26, 1957.

Add the following amendment in there place:

Effective February 12, 1958

"Prices herein acknowledged as they apply to each purchase order are firm for six (6) months from date of Lockheed's original purchase order date".

"It was further agreed that orders with delivery extended in excess of six (6) months from date of the order, and Titanium or Titanium alloy shall be covered by separate negotiated Terms and Conditions".

We further understand that your date of verbal order is the same date used on your written confirming order.

Your early confirmation of our agreement will be appreciated.

Very truly yours, Huck Manufacturing Company,
George Q. Mathews, Vice President In Charge of Sales.

GQM/by

cc: Mr. Malcomb

Armour, Benkert, Reynolds, Stern, Clute, Tenny, Villacres, Westrick, Huegin, DeLoach, T & C File, File. Mr. Dickenson.

[fol. 1231] IN THE UNITED STATES DISTRICT COURT FOR THE EASTERN DISTRICT OF MICHIGAN

GOVERNMENT'S EXHIBIT No. 94

CHERRY RIVET COMPANY
231 Winston Street
Los Angeles 13

July 29, 1950.

Mr. A. Watson Armour, Jr.,
Executive Vice President,
Huck Manufacturing Company,
141 Jackson Blvd.,
Chicago 4, Illinois.

Dear Mr. Armour:

Your price list was received here a couple of days ago. This was a friendly gesture on your part, which I appreciate. Of course, we had been aware of the prices which your salesmen were quoting to our customers, and we had gathered a considerable number of these quotations so that we were able to construct a list for all sizes. This we had been using for quite some little time. I was astonished in comparing your actual list with this one to find how accurate our estimates had been.

Because of the present unsettled situation, both as to supply of material and to volume of business, plus the distinct possibility of Government controls in connection with rearmament, we have felt that we could not publish a new price list for the present. Both your men and the South Chester men have been under-quoting us, and where this comes to our attention we meet the prices without hesitancy. I presume this will settle down to a regular pattern in a month or so, and then no doubt we will publish a list and make it available to everybody. As soon as we reach

that conclusion, I will be very glad to send you a copy, even before it appears in print.

Our tooling is now almost complete on Lockbolts, and we have scheduled our first deliveries for the first week in August. It has been very gratifying to discover how well this product has been received and what large quantities of them are in use at present or can be used with a good supply. As soon as we run our costs on the first production, we expect to put out a list of these prices. I will be happy to send you a copy of that. Present indications are that it will run substantially below your current offering prices.

If business or recreation should bring you to the Pacific Coast anytime, I would be most happy to see you and it would be a pleasure to play host. When I'm next in Chicago, no plans in mind at the moment, I will let you know well in advance so that I can be sure and catch you in town.

With very best wishes and kindest regards,

Sincerely yours, Bill Hubbard.

WBH:rd

[fol. 1232] IN THE UNITED STATES DISTRICT COURT FOR THE EASTERN DISTRICT OF MICHIGAN

GOVERNMENT'S EXHIBIT No. 95

MINUTES OF THE PATENT COMMITTEE MEETING OF MARCH 29, 1951

Those present at the meeting were W. B. Hubbard, E. H. Stau and M. C. Ketchum.

Minutes of the meeting of February 6, 1951 were reviewed and discussed. Mr. Hubbard reported on a conversation held two or three weeks previously with Mr. Dickenson. It appeared that the tentative conclusion of the Townsend attorneys was in favor of entering into a license agreement with the Huck Manufacturing Company with respect to the manufacture and sale of lockbolts and lockbolt tools. The basis for this conclusion lay in the fact that it might be possible by such a license agreement to

control the lockbolt business and limit it to Huck and Townsend. Such a limitation would be preferable to a legal action which would invalidate the patents and which, by the same act, would open the field to other manufacturers of fasteners. A license agreement would certainly discourage others from going into the field.

Subsequent to this discussion with Mr. Dickenson, the matter had been reviewed again by Mr. Hubbard with George White. It was Mr. White's opinion that such an arrangement as indicated by Mr. Dickenson was feasible and desirable, provided it actually did keep other manufacturers out of the field. Mr. White pointed out, however, that he felt the patent structure was so weak that any arrangement made as between Huck and Townsend would not deter anybody else who studied the patents from going into the field if they desired.

Mr. Ketchum pointed out that on the basis of studies which he had made in this field with our attorneys in previous years and after studying the two recent Huck patents on lockbolts, it was his opinion that we, or others, [fol. 1233] could manufacture and sell lockbolts substantially identical with the Huck lockbolt and still without infringing the Huck patents. Mr. Stau pointed out that one obstacle to this would be the insistence of the Armed Services on having complete interchangeability.

Mr. Ketchum related that letters had been written to a number of Cherry Rivet customers, notably Fairchild Aircraft Corporation, Fruehauf Trailer, Baker Trailer and seven or eight other companies associated with Baker in the manufacture of trailers. These letters were written in a form prepared by George White and stated as follows:

"We understand that you have been advised through the Huck attorneys that the purchase and use of lockbolts other than those manufactured by Huck might infringe certain patent rights held by the Huck Manufacturing Company.

"A careful study has been made for us of the lockbolt patents held by Huck Manufacturing Company and, to the best of our knowledge, our lockbolts do not infringe any of those existing patents.

"In view of your position in this matter, we wish to assure you that in the event of any attempt by Huck Manu-

facturing Company to carry out any legal action against you, based on notice of possible infringement, we shall take all necessary legal steps for your protection against such interference."

After considerable discussion of various factors affecting this matter, the Patent Committee still felt that they would prefer not to enter into a license agreement with the Huck Manufacturing Company, but would like to clear up the matter by whatever legal action was necessary and go ahead with original plans to get the business by good sales methods.

Obviously, the position of the Patent Committee is strictly advisory on this matter and the final decision as to policy would be made by Townsend Company. If that [fol. 1234] decision was in favor of making a license agreement along these lines, then the following suggestions might be of help in drawing the license:

1) A license should be exclusive and specifically state that Huck would not license anybody else.

2) The royalty should be very low because of the doubtful value of the patents, perhaps 1 or 2%.

3) The provisions covering inclusion of new developments should be very carefully drawn to make sure that anything new would be covered by the same license (Huck is particularly slippery in this respect).

4) If others manufacture and sell lockbolts and Huck does not protect the patent position, then Townsend should be relieved from further payment of royalties.

5) There should be no limitation of fields in which lockbolts can be sold and no limitation of customers. In other words, Townsend and Cherry could compete directly with Huck on all customers.

As corollaries to the conclusion of a license, the following points should be resolved in favor of Cherry and Townsend:

1) Release of the Hood Patent No. 2,531,270 to Townsend. This is the patent which bears on the hi-clinch rivet which Cherry has been developing and marketing. If we do not obtain this patent, it will be necessary to take steps to invalidate it also, since it is annoying, and while it does not eliminate our sale of hi-clinch rivets it makes it more

difficult to manufacture them. (Hood was an employee of the Cherry Rivet Company who carried this information to Huck when he went to work for Huck after being discharged by Cherry. Huck promptly filed a patent application.)

[fol. 1235] 2) It should be possible to make an arrangement which would keep Huck out of the Blind Rivet field entirely. He admits that his volume is very small in this field and that he is not particularly interested in it. If we pay him royalties on lockbolts he should get out of the other field where again his value is largely nuisance value.

At the Committee meeting held December 21, 1950, it was suggested that we prepare assignment forms for all issued patents and all pending applications for the assignment of these to Townsend Company. These papers have been prepared and are now in our file. There is some question as to whether or not these papers should be made of record in the Patent Office so that change of ownership of the patents will be established and so that pending patents will issue in the name of Townsend rather than the name of Cherry Rivet Company. The point in question would appear to be one of policy on the part of Townsend Company rather than a legal point, and it is suggested that we determine Townsend's desire in respect to whether or not these papers should be filed with the Patent Office.

Mr. Ketchum stated that he had a call from Herbert Cameron who was one of the licensors of a certain agreement entered into by the Cherry Rivet Company on September 8, 1945, for the manufacture and sale of the so-called Cook rivet under United States Letters Patent No. 2,381,113. This agreement was cancelled on April 20, 1949 and all minimum royalties due the licensors at that time were paid in full. Mr. Cameron states that he now feels Cherry Rivet Company did not exercise sufficient ingenuity and effort in the development and marketing of rivets as provided in the license agreement and that, therefore, we still have some obligation to the licensors. Mr. Cameron [fol. 1236] stated that he thought we either ought to buy the patent or resume development work and enter into a new license agreement with them for such development. He indicated that if we did not choose to do one of these two things he might be obliged to take legal action against

us for non-fulfillment of provisions of the license agreement. The Patent Committee discussed this matter briefly and concluded that there are no grounds for any claims against the Company in connection with the license agreement and that there is no reason why any concessions should be made to Mr. Cameron and his associates.

The meeting was adjourned.

M. C. Ketchum, Chairman, Patent Committee.

[fol. 1237] IN THE UNITED STATES DISTRICT COURT FOR THE EASTERN DISTRICT OF MICHIGAN

GOVERNMENT'S EXHIBIT No. 98

July 11, 1957.

Mr. George Q. Mathews,
Huck Manufacturing Company,
2480 Bellevue Avenue,
Detroit 7, Michigan.

Dear Mr. Mathews,

This is to acknowledge your letter of July 8, 1957. It is quite apparent from your letter that a complete misunderstanding exists as to our discussion here in Los Angeles, and as to our subsequent telephone conversation. In order that we may correct that misunderstanding, our position is quite simply stated.

At the time of my discussion with you in Los Angeles, it was our impression that it was the Huck Manufacturing Company's policy and desire to establish additional licensees for the manufacture and distribution of the Huck lockbolt. Olympic Screw & Rivet Corporation has the necessary equipment and established sales organization to manufacture and market substantial quantities of lockbolts.

While we have been in the process of developing our own version of a lockbolt and with which we have been satisfactorily successful, we felt we should consider a possible license arrangement with the Huck Manufacturing Company for the manufacture and sale of Huck lockbolts.

This consideration was motivated by our interest and presumably yours in the standardization of a lockbolt which would be for the best interests of both the end user and manufacturer. Such standardization would resolve the old problems of the user with respect to duplication of tooling, installations, and inspection procedures.

It was not our intention and certainly not good business prudence that a disclosure by us of our lockbolt would be a condition to a discussion with you for a possible license arrangement. If a satisfactory license arrangement could be worked out, we would be happy to make disclosures to you in the interest of standardization.

In view of the apparent misunderstanding, we will assume that the meeting date of August 3, 1957 is no longer desirable. Should you desire a discussion on the license question in view of the above, please contact us and we will be happy to cooperate. In the interim, we are proceeding with our fastener.

Sincerely yours, Olympic Screw & Rivet Corporation, E. H. Stau, Vice President, General Manager.

EHS/lc

CC: S. Maness.

[fol. 1238] IN THE UNITED STATES DISTRICT COURT FOR THE EASTERN DISTRICT OF MICHIGAN

GOVERNMENT'S EXHIBIT No. 99

TOWNSEND COMPANY
Cherry Rivet Division

Memorandum

Date: January 19, 1959.

From: John H. Roy/mp.

To: L. B. Buster.

Subject: Lockbolt "Standards".

Copies to: PEHorst√, MCKetchum, FCFearman, WH Wrigley, Tech Sales, File.

We are recommending the following in an effort to standardize on our lockbolt offerings:

1. Through Milo Ketchum's Engineering Department we should advise the NASC, in connection with their current survey of lockbolt specifications, that we prefer Type II, Class 3 finish with lauric acid lube as a standard on both protruding head and countersunk head on all "T" material lockbolts and stumps.

2. Having advised the NASC accordingly, it is recommended that we adopt as a standard, insofar as our manufacturing, stocking, and marketing are concerned, Type II, Class finish with lauric acid lube on both protruding head and countersunk head lockbolts.

(Gold Chromade)

Our standards pages, as currently being revised, should call out Type II, Class 3 finish as standard, with Type I, Class 3 finish coded as optional, identified by part number suffix.

3. It is recommended that the following non-standard price sheets be made applicable:

a) Degreasing: On Boeing orders for "dry" or degreased pins (less lauric acid lubricant) the

price schedule for this part to BAC prints would be higher than its lubed counterpart by 2%. This addition would not show on invoices as an extra, since a separate price schedule would be established for these particular bolts.

(Plain Cog)

b) On customer orders for standard lockbolts with the Type I, Class 3 finish (rather than the standard Type II, Class 3 finish) the price schedule for this suffix coded part number would be higher than its non-suffix counterpart by 5%. This addition would not show on invoices as an extra, since a separate price schedule would be established for such suffixed print parts.

OK, ?

[fol. 1239] 4. No two lockbolt parts varying somewhat in finish, tolerances, etc., should be sold under the same part number. Each part should have its own number (or suffix) and have its own price schedule.

5. We recommend that so-called standard lockbolts in "T" material in the future be in grip lengths up to and including —12, and that all grip lengths beyond —12 in "T" material be considered non-standard, subject to non-standard minimums, pricing, etc.

We also recommend that all aluminum lockbolt pins be made non-standard and subject to non-standard minimums, pricing, etc. Also, the standard pages on same be marked, "Not available for new design."

6. The above suggestions should be put into effect on February 23, or preferably in connection with any general review of lockbolt pricing, should such review be under consideration at this time.

[fol. 1240] IN THE UNITED STATES DISTRICT COURT FOR THE EASTERN DISTRICT OF MICHIGAN

GOVERNMENT'S EXHIBIT No. 100

TOWNSEND COMPANY
Cherry Rivet Division

Memorandum

Date: January 22, 1959.

To: P. E. Horst.

From: E. B. Buster/mp.

Subject: Lockbolt Standards.

Copies to: JHRoy, File.

(Prev. Controversy Not Clear? Any Stock Prob's? 3b.)

Attached is John Roy's memorandum to me of January 19, which outlines recommendations of the Aircraft Sales Department with respect to lockbolt standards.

You will recognize that these recommendations represent a backing down on our part on clear chromate. We are not particularly concerned in doing this, because the proposed price increases will automatically take care of the higher cost of inventory of Type I and Type II.

(No problems)

The problem is somewhat diminished by the proposal that no two lockbolt parts, which would vary in finish, tolerances, etc. would be sold under the same part number. Thus, in effect, the price differential is buried.

On receipt of this information, I would appreciate your telephoning me for further details before making contact in Detroit.

Attachment—1.

EBB.

[fol. 1241] IN THE UNITED STATES DISTRICT COURT FOR THE EASTERN DISTRICT OF MICHIGAN

GOVERNMENT'S EXHIBIT No. 101

TOWNSEND COMPANY
Cherry Rivet Division

Memorandum

Date: February 9, 1959.

To: Those Listed.

From: John H. Roy/mp.

Subject: Lockbolt Pricing and Standards.

Copies to: EBBuster, PEHorst √, MCKetchum, FCFearman, WHWrigley, WBHarris, DJSauser, WFArnoldy, JMerdinger, RDFadely (4), RHerndon (2), RNelson, BHoward, JAD'Errico, ECCarlton, AEAlman, FAMcQueary, CKenyon, JOKing, BDyess, WHelms, File.

This memorandum is to be effective February 9, 1959.

On January 30 a memorandum was written on this same subject, and copies were distributed to most of you. This memorandum is to supplement the January 30 announcement by filling in additional details.

We have adopted as standard, insofar as manufacturing, stocking, and marketing are concerned, Type II, Class 3 finish with lauric acid lube on both protruding head and countersunk head "T" material lockbolts and stumps.

Our Standards pages, as currently being revised, will call out Type II, Class 3 finish as standard, with Type I, Class 3 finish coded as optional to be identified by part number suffix "W."

Example: ACT509-T6-4. Gold chromate color with lauric acid lube.

ACT509-T6-4W (Clear) Type I, Class 3, with lauric acid lube.

At the present time, Douglas, Lockheed, and Northrop will not accept countersunk bolts with a gold chromate finish. From time to time there may be other customers who also will object to the gold, and like Douglas, Lockheed, and Northrop, will want clear finish on their bolts, either countersunk or protruding head. Where the customer requires a clear finish, care should be taken to see that the "W" suffix is added to the part number, even if it is missing from the customer's purchase order.

On all orders received after February 9, 1959 for "W" coded bolts, use the price sheet, plus 5% rounded off to the nearest 5¢.

[fol. 1242] Some customers, particularly Boeing Airplane, when ordering to BAC prints, insist on dry or degreased bolts. (Less lauric acid lubricant.) These bolts will show a part number suffix, "CD." Please note that this is a change in the meaning of the coding "CD."

> Example: ACT509-T6-4*CD*. Gold chromate post plate treatment *without* lauric acid lube.

When pricing "CD" suffixed bolts, add 2% to the price for all series, rounded off to the nearest 5¢.

Special sheets containing these "W" and "CD" suffixed extra charges are being prepared, and will be sent to those of you where applicable when ready. Series R3014 and R3304 are covered in these sheets.

The suffix code "E" for electrofilm finish remains unchanged. The same extra charges, as have been used in the past, are to be added to the price sheets as a shown extra for electrofilmed bolts.

John H. Roy.

[fol. 1243] IN THE UNITED STATES DISTRICT COURT FOR THE EASTERN DISTRICT OF MICHIGAN

GOVERNMENT'S EXHIBIT No. 103

Townsend Company

Sales of Lockbolts
9/1/54 to 8/31/61

9/27/61

	Aircraft	Commercial	Total
9/1/54 through 6/30/55	$ —	$ 513	$ 513
7/1/55 through 6/30/56	136,659	50,262	186,921
7/1/56 through 6/30/57	1,078,141	163,119	1,241,260
7/1/57 through 6/30/58	1,319,488	156,103	1,475,591
7/1/58 through 6/30/59	1,810,279	268,198	2,078,477
7/1/59 through 1/2/60*	780,291	144,488	924,779
1/3/60 through 12/31/60	1,973,658	426,215	2,399,873
1/1/61 through 8/26/61	1,243,586	285,846	1,529,432
Totals	$8,342,102	$1,494,744	$9,836,846

* Change in fiscal years.

[fol. 1244] IN THE UNITED STATES DISTRICT COURT FOR THE EASTERN DISTRICT OF MICHIGAN

GOVERNMENT'S EXHIBIT No. 104

February 10, 1956.

To: Those Listed Below.

From: P. E. Horst/ftp.

Subject: Report on Visit to Huck Manufacturing Company February 7, 1956 by G. A. Bentley and P. E. Horst.

1. The two-dot identification on lockbolt collars was proposed by Santa Ana. New Brighton thinks this would make difficulty in the header. Gorrell will see that the thinking

of New Brighton and Santa Ana is brought together. In the meantime, Mr. Brilmyer will withdraw his memorandum of February 1st. Obviously, they will need some other method of identifying products they manufacture and sell to us. We will hear from him later.

2. It is now Huck's policy not to take off the shelf production quantities of items we buy from them. This means that they can manufacture identifying marks into the collars. It also means that delivery may be a little longer.

3. They are currently redesigning lockbolts so that they will have shorter pin-tails. The present design specifies a longer tail than was necessary, and they are only now getting around to figuring out how much shorter it can be made. This redesign in no way obsoletes present stocks. We do recommend, however, that any extensive tooling program take this into consideration.

4. They report that they spent over $75,000 in tungsten carbide tooling for the sheer-type lockbolt. They are unsuccessful in holding the closer tolerance except in Tungsten carbide tools.

5. They regard all sizes listed in their published price lists as standard sizes which they would carry in stock to some degree. Very popular sizes are those having the same grip lengths that other popular size fasteners have—namely, grip lengths one and two times the diameter of the lockbolt. Popular sizes to be used in wood-to-steel applications are much more divergent and hard to predict.

6. They report that it would be practical to make long lockbolts in open dies, particularly when no close tolerance is required.

[fol. 1245] 7. Prices:

a. When socalled specials are quoted f. o. b. Santa Ana, we are to take the Eastern price for the special, add 3%, and round it off to the nearest nickel.

b. Specials and standard lockbolts may not be combined for price advantage.

c. *Lockbolt collars may not be combined for price advantage.* The reason for this is that the average customer buys the same diameter collar for a number of lockbolts so that he already has the advantage of some combining.

8. While Huck is obliged to keep us advised of any new engineering developments, they will not volunteer infor-

mation on a new special unless they sell at least 250 M of that item. Of course, they will always give us information about lockbolts sold in lessor quantities if we request it.

9. Looker is enthusiastic about rented guns and gun noses. He says that it leads to many sales. Also, it frequently helps the buyer circumvent his own company's regulations governing the size of the capital expenditures he may make.

10. The lockbolt application for railroad car builders for which they had such high hopes and expected such a large volume, turns out to be a sandwich-type construction for the end of freight cars developed by Pullman Standard Engineering, but which has not yet been put into production due to internal politics at Pullman.

11. They still feel strongly that the lockbolts should be sold on a freight equalization basis rather than freight allowed. While some of their points are not valid, they are concerned about the effect on heavy lockbolts like one-half inch in diameter. They are also concerned about the inconsistency of selling Blind Rivets on one basis and Lockbolts on another. We told them no change would be made on our part without first discussing it with them further.

12. They still feel violently on the subject of stocks in the hands of distributors. They state that they will match any stocks that we establish in places like Ft. Worth or Seattle. They are concerned about loss of profits they feel they get from the smaller quantity orders. If the figures they gave me are correct, this profit might be more substantial than we thought. They say that the average [fol. 1246] order received from the aircraft companys is priced from the 5 M colum. If a weighted average is used, the average lockbolt is priced from the 15 M column. In view of the fact that extended shipments and combinations are permitted, this seems incredible. They are accumulating further figures for us. We should like to hear from Santa Ana what order-size pattern they expect from Aircraft companies.

13. Mr. Armour expressed emphatic intention to limit the licensees for lockbolts to ourselves so that there would be only two people in the business in the future.

14. They are optimistic about the market for larger diameters of lockbolts and intend to get into production of these larger sizes.

15. It is their opinion the Commercial Lockbolt is probably under-priced.

F. R. Dickenson, G. A. Bentley, H. E. Chilcoat, H. C. Weidner, Jr., J. W. Hernlund, W. R. Wyckoff, C. Gebhard, F. J. Schreiber, Milo Ketchum, F. J. Kennedy, R. W. Krause.

[fol. 1247] IN THE UNITED STATES DISTRICT COURT FOR THE EASTERN DISTRICT OF MICHIGAN

GOVERNMENT'S EXHIBIT No. 105

TOWNSEND COMPANY
Cherry Rivet Division

Memorandum

Date: August 29, 1957

Subject: Price Changes on Lockbolts

To: H. E. Chilcoat

From: E. B. Buster/mp

Copies To: PEHorst√, File

Paul Horst informed me in a telephone conversation that Huck's announcement of price adjustments has been distributed to customers. I have not yet received our copy, but have been informed that the information has been mailed to us along with Huck customers.

Will you please prepare an announcement to our customers for immediate mailing, stating that we are forced to make a price adjustment because of increased costs in labor and materials on our entire lockbolt line. Point out that there is a 3% to 6% increase in some lines, and a net reduction in others, but that the overall result is a slight increase. State that our reprinted price sheets will

be distributed as soon as available, but that these price adjustments will become effective September , 1957.

Sept. 9 —.

25 copies are being sent to EBB.

[fol. 1248] IN THE UNITED STATES DISTRICT COURT FOR THE EASTERN DISTRICT OF MICHIGAN

GOVERNMENT'S EXHIBIT No. 106

December 30, 1957.

Mr. A. E. Benkert,
Huck Manufacturing Company,
2480 Bellevue Avenue,
Detroit, Michigan.

Dear Al:

We transmit the following data which you requested:

1) A copy of our letter to our distributors verifying our drop shipment policy for lockbolts.

2) Copies of our quotation and order acknowledgment forms showing our price terms. We are still in the process of collecting these same forms from such of our distributors as acknowledge and quote directly. Please note that our printed form states less advantageous terms and that we overstamp the six-month clause when necessary for lockbolts.

3) We also transmit two copies of our Eastern and Western lockbolt price sheets.

Yours very truly, —— ——.

PEH:mb

Enclosures

[fol. 1249] IN THE UNITED STATES DISTRICT COURT FOR THE EASTERN DISTRICT OF MICHIGAN

GOVERNMENT'S EXHIBIT No. 107

TOWNSEND COMPANY

Date: April 24, 1958

To: P. E. Horst, R. E. Casner, J. J. Perz.

From: W. R. Wyckoff/sg.

Subject: Lockbolt Meeting—April 23, 1958

Following is a summarization of key matters discussed and actions recommended as a result of the recent licensee-licensor meeting:

1. The Product Manager is to recommend development of pulling heads which may be used on Huck guns to pull Cherry Rivets should facts regarding potential business resulting warrant.

2. A report was requested regarding what standard lockbolt items we are tooled for and what specific items are involved. The primary purpose of the report is outlined in P. E. Horst's of April 18, 1958, Section 5-B regarding the recent meeting at Huck. Such report to be initiated through normal channels with copies for R. E. Casner and P. E. Horst.

3. A list of non-standard items which are currently in stock is also to be developed [with quantities outlined for internal purposes only.] (for submission to Huck.) Same procedure as above should be followed.

4. Flanged collars for commercial lockbolts

A) P. E. Horst advised that Product Development Department has developed necessary techniques and tooling for production of flanged collars.

B) Investigation and testing should be carried out immediately by Technical Sales to determine effect of flanged collars on pintail design, tooling and swaging anvils, strength performance data and any other areas affecting application. (Hurry it up. Let customer try it.)

C) Based on results of such tests and after consideration of pertinent cost factors and marketing considerations, Technical Sales is to recommend a program regarding standardization, stock programs and promotion of the flanged lockbolt collars. Product Manager should complete necessary tests and studies and submit initial recommendation by June 1, 1958 or sooner.

D) Because of material costs considerations, it was agreed to except aluminum for the flange design until further investigation by P. E. Horst.

[fol. 1250] 5. P. E. Horst should be notified in advance of any contemplated product changes of such importance they affect both licensee and licensor. Such notification to be accompanied by pertinent sales considerations.

6. Desirability of standardizing on color standards of licensee and licensor was agreed. The Product Manager will advise Huck on precisely our recommendations for color coating. In turn it was agreed Huck should define what shall constitute a given color in range of color shade concerned.

Huck also to be advised concerning our minimum quantity policy of 50,000 pieces per item, no additional charge, 90 days release. Also of the $15 lot charge to apply on color coated lockbolts when quantities per item are less than 50.000.

7. P. E. Horst will discuss with manufacturing considerations regarding the contemplated lower cost lockbolt. Subsequently, the Product Manager is to determine full implications concerning carbide tooling, tool inventory, lockbolt sizes, lockbolt stocks, and any other applicable factors which would be involved in a gradual switch over to this item. Such findings to determine Technical Sales's recommendation regarding a complete program involving the marketing of such design.

8. Since Huck is proposing different locking groove design on ½" diameter and larger lockbolts and reducing number of grip lengths accordingly, it was agreed that no action should be taken on tooling for these larger diameters without clearing with P. E. Horst regarding design standards. Another consideration to be given study by Tech.

nical Sales is the fact that the collar has not as yet been defined insofar as Huck design is concerned. Technical Sales to study available Huck drawings on large diameter lockbolts and where desirable make appropriate tests and where need is apparent, subsequent recommendations concerning design.

9. P. E. Horst will obtain drawings on ½" diameter stainless steel lockbolts and ascertain availability to trade and tools recommended for information of Technical Sales Department.

W. R. W.

[fol. 1251] IN THE UNITED STATES DISTRICT COURT FOR THE EASTERN DISTRICT OF MICHIGAN

DEFENDANTS' EXHIBIT No. E

October 10, 1958.

Huck Manufacturing Company,
2480 Bellevue Avenue,
Detroit 7, Michigan.

Attention: Mr. A. Watson Armour, President.

Gentlemen:

As you are undoubtedly aware, the fastener collar design of our Company (copy of which design is enclosed for your convenience) was recently approved by Boeing Airplane Company, Seattle, Washington, for use with lockbolts and lockbolt stumps of the types made by you and your licensees. Those collars are intended to be placed over such pins and stumps and swaged onto the grooved portions thereof by rivet setting guns of the type which have been made and sold by you or your licensee, Chicago Pneumatic Tool Company, for more than twenty years. Boeing, we understand, owns a number of these guns which it has purchased from you or your said licensee.

As you will note from the enclosed drawing, our collar is a simple hollow cylinder chamfered at both ends so that it may be inserted either end first upon the lockbolt or lockbolt stump, and be centered automatically in the swaging anvil.

In view of the simplicity of this collar design, and the fact that it adopts no configuration taught in any of your outstanding patents, it is with some surprise that we have received from a reliable source in Boeing information that, about the middle of September of this year, when our collar design was in the process of being approved by Boeing, George Q. Mathews and Harold G. Brilmyer, representatives of your Company, conveyed to Boeing personnel the impression that, in view of certain patents which you hold, only your Company or its licensees would be able to make and sell collars of our design to Boeing for use with lockbolts and stumps.

We have carefully examined all patents of which your Company is the record holder, and have conferred with patent counsel as to the scope of all patents which might appear to have any possible bearing upon this collar structure to determine whether our sale of such collars to Boeing for the above stated use, might constitute a violation of any lawful patent rights owned by you.

[fol. 1252] We find no unexpired patent owned by you which *per se* covers our collar design, nor any design closely resembling the same, nor do we find any patent of yours which might be regarded as contributorily infringed by our sale of collars to Boeing.

Your patents, Nos. 2,531,048 and 2,531,049, claim fasteners which include collars of special descriptions, neither of which covers our collar design. The collars of our design, incidentally, are identical in structure to the Cherry Rivet collar sold to Fruehauf in substantial numbers, which your counsel declared in open court, in your suit brought against Townsend in 1951, was not covered by either of these patents.

Your method patent No. 2,754,703 is directed to a method and provides no basis for enjoining us from selling unpatented collars of the type now contemplated. These collars perform no function other than that which was performed by the tubular heads of certain of your expired patents, one of which was successfully asserted in the Townsend case to cover a lockbolt collar. The validity of patent 2,754,703 is subject to considerable question, for among other reasons, it was obtained on representations to the Patent Office that prior art devices failed to pull

the plate elements together. This is not the fact, as the old animated demonstration booklets distributed by your licensee, The Clark Equipment Company, to illustrate the function of the rivet manufactured thereunder amply reveal substantial plate pull together characteristics.

But treating the '703 patent as valid, we are advised by counsel that customers of your lockbolts would be impliedly licensed under your other patents to employ the lockbolts in the obvious manner for which they have been designed, namely to be swaged by means of collar to secure members together. Purchase of your guns by customers such as Boeing would also give rise to an implied license under your patents to use the guns for the purposes for which they are sold. Boeing, therefore, would not be an infringer of your method patent '703, so that our sale of simple cylindrical collars to Boeing could not be regarded as contributing to any infringement of this patent.

[fol. 1253] We also understand that a substantial percentage of our collars will be used by Boeing to secure lockbolt stumps in a manner not remotely covered by your '703 patent, and these collars are similar to collars which you have sold for this same purpose. There would clearly appear, therefore, to be a substantial non-infringing use for these collars which use renders their sale by us free from any possible charge of contributory infringement of the '703 or any other combination patent.

Our purpose in writing you at this time is to ask your written assurance that the above reported impression created among Boeing personnel by your Mr. Mathews, is not the official view of your Company, but rather was merely "salesman's talk" in an effort to push your products with this customer, and that there will be no further harassment or claim to our customers that we are not free to manufacture and sell the above described collars.

In the absence of such assurance, we would be faced with determining what steps should be taken by us to clarify the situation thus created. The only steps apparent at present are:

1. To await your suit against us for patent infringement;

2. To institute suit against you for declaratory relief and/or for damages under the anti-trust laws; and

3. To discuss the entire blind rivet and lockbolt situation with the Department of Justice Anti-Trust Division with a view to convincing the latter of need for public action under the anti-trust laws.

In this latter connection, it appears to us that there is a serious question whether, if you are actually asserting your unexpired patents to prevent our supplying simple unpatented collars to users such as Boeing under the circumstances above indicated, you are attempting to monopolize this line of commerce beyond that which is permitted under the patent laws of the United States.

[fol. 1254] It is also our thought that certain other actions taken by your Company in the past to preserve to itself and to its licensees this important segment of the fastener business might merit public action by the Anti-Trust Division of the Department of Justice.

Your early advice will relieve us of the necessity of pre-maturely selecting one of these alternatives.

Very sincerely yours, Brown-Line Corporation, R. Looker, President.

RL/vd

Est. Blind Rivets—
Huck—4MM
Ch-Town—3.MM
Olympic—1.0
DuPont—1.3
Deutsch—1.0
Southoo—1.2

cc: Miner, Paoitt, White, file.

[Vol. 1255]

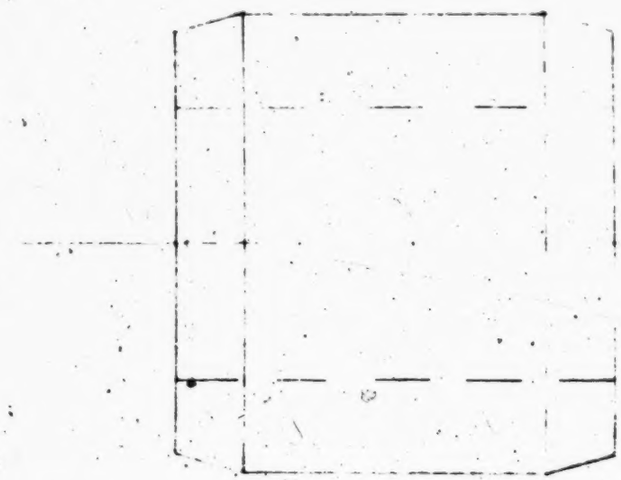

						325	COLLAR	—	—
					ITEM	PART NUMBER	DESCRIPTION	MATERIAL SIZE	SPECIFICATION

NO REQ PER NOTED ASSEMBLY

DRAWN 10-10-58 GHW

CHECKED —

THIS DRAWING EMBODIES A CONFIDENTIAL, PROPRIETARY DESIGN, AND ALL DESIGN, MANUFACTURING, PRODUCTION, USE, AND SALES RIGHTS REGARDING THE SAME ARE EXPRESSLY RESERVED.

HEAT TREAT —

FINISH —

LIMITS EXCEPT AS NOTED

.XX ±
.XXX ±
ANGLES ±

ALL MACHINED SURFACES TO BE ✓ PER NAS 30

BREAK ALL SHARP CORNERS

SCALE —

NO. REQ.	NEXT ASSEMBLY

BROWN-LINE CORP.
EL SEGUNDO CALIF.

LOCKBOLT + STUMP COLLAR

325 UNDIMENSIONED

[fol. 1256] IN THE UNITED STATES DISTRICT COURT FOR THE EASTERN DISTRICT OF MICHIGAN

DEFENDANTS' EXHIBIT No. F

Law Offices
SMYTH & ROSTON
Patent, Trademark and Copyright Causes
4262 Wilshire Boulevard, Suite 320
Los Angeles 5, California
WEbster 8-6251

November 7, 1958.

File

Charles L. Beckler, Esq.,
Anti-Trust Division,
U. S. Department of Justice,
Washington, D. C.

Dear Mr. Beckler:

The Huck Company finally replied through its counsel, John C. Sterritt, Esq. of Harness, Dickey & Pierce, to Brown-line Corporation's letter of October 10th, copy of which Mr. Looker and I left with you when we conferred with you on October 28th. A copy of Mr. Sterritt's reply is enclosed.

Mr. Looker has simply acknowledged Mr. Sterritt's reply on behalf of Brownline Corporation rather than take issue by extensive correspondence with the points made in Mr. Sterritt's letter. For your information, however, Mr. Looker has provided us with the following comments respecting the points raised in Mr. Sterritt's letter.

1. The collars developed by Brownline during the past 15 months are of Brownline's own design and result from their own established development program. The general configuration utilized, namely a simple tubular element, has been used by Huck and others for many years and is practically identical with the Freuhauf collar which was declared by Huck's counsel in open court in the Cherry Rivet suit in the Southern District of California not to infringe the patents there in suit including No. 2,531,049. This present collar design

was not evolved out of any relationship which Brownline's management may have had through prior employment at Huck.

2. You will note that the combination of the method patent 2,754,703 is being asserted to cover the use of the simple cylindrical collar. Also, the 2,531,049 patent is being asserted to cover the same collar in combination. Previously, Huck had charged in the Cherry Rivet suit that its earlier rivet patent '493 covered such a combination.

[fol. 1257] 3. The representations made to the U. S. Patent Office in the form of the demonstration were factual insofar as given, but Huck counsel failed to call the attention of the Patent Office to the known fact that the prior art blind rivets manufactured by Clark Equipment Company of Buchannan, Michigan did perform the act of pulling the sheets together. These Clark blind rivets were widely sold in industry. This fact was discussed by Mr. Looker with Mr. Sterritt both before and after the demonstration before the Board of Appeals of the U. S. Patent Office. Moreover, during the Huck Vs. Townsend litigation, Mr. Sterritt was concerned that Townsend would demonstrate the substantial pull together characteristics of the Clark blind rivet. Such a demonstration would probably have made the Court feel that there was little difference between the blind rivet and the lockbolt. Instead, however, the demonstration for comparison used the aluminum blind rivets which had the poor sheet pull together characteristics demonstrated to you.

We would appreciate being advised as soon as it is known whether any investigation of the Huck-Townsend situation will be authorized by the Division.

Yours very truly, Smyth & Roston, William H. Pavitt, Jr.

WHP:vmk.

Encl.

cc: R. Looker, Brownline Corp.√

[fol. 1258] IN THE UNITED STATES DISTRICT COURT FOR THE EASTERN DISTRICT OF MICHIGAN

DEFENDANTS' EXHIBIT No. G

July 18, 1956.

Mr. Robert Looker,
The Brown-Line Corporation.

Dear Bob:

Thank you for your letter of July 13th. Your request gives rise to certain complications which we have not been able to surmount.

We are giving the matter further consideration and will let you know the results at a later date.

Sincerely yours, Huck Manufacturing Company,
A. Watson Armour, III, President.

AWA:d.

cc: Benkert, Mathews, Reynolds, Stern, Sterritt.

[fol. 1259] IN THE UNITED STATES DISTRICT COURT FOR THE EASTERN DISTRICT OF MICHIGAN

DEFENDANTS' EXHIBIT No. H

THE BROWN LINE CORPORATION

Mr. A. Watson Armour, President,
Huck Manufacturing Company,
141 W. Jackson Boulevard, Room 4015,
Chicago 4, Illinois.

Dear Mr. Armour:

Thank you for your letter of July 18 on the license requested. I appreciate the complexities of the question at hand, and the time required to see them through.

I do hope, however, that we will be able to get the matter settled while I'm still here, to save extra travel and trouble

of negotiating 3,000 miles away, and to permit the kind of planning a new business must have.

Thank you again for your interim report.

Very sincerely yours, The Brown Line Corporation.
Robert Looker.

RL:mb.

copies for Reynolds, Stern, Sterritt.

Attention of: J.C.S.

Received August 3, 1956: Harness, Dickey & Pierce, Detroit, Mich.

[fol. 1260] IN THE UNITED STATES DISTRICT COURT FOR THE EASTERN DISTRICT OF MICHIGAN

DEFENDANTS' EXHIBIT No. K

ILLINOIS TOOL WORKS
Manufacturer of Engineered Metal Cutting Tools, Illinite Standard Cutting Tools, Shakeproof Fastenings and Special Purpose Machines

2501 North Keeler Avenue
Chicago 39, Illinois
Telephone: ————

September 10, 1957.

Mr. Robert Looker, President,
Brown-Line Corporation,
111 Main Street,
El Segundo, California.

Subject: Looker Commercial Lock Bolt.

Dear Bob:

I would like to apologize for not forwarding our legal department's comments pertaining to your lock bolt application sooner. I have been quite busy since returning from the West Coast as Milt Miner and his boys have somewhat snowed me under with projects.

I am enclosing a copy of a confidential letter which originated in our patent department, for your inspection and

comments. It seems in essence that our attorneys feel that you would be allowed some specific improvement protection on your device, but would still be cominated by Huck Patent #2754703.

I am sure that you are very familiar with the existing and expired art on fasteners of this nature and also are aware of the claims made in the abovementioned patent. We would sincerely appreciate your comments to this letter before further work can be done on our part.

I am sure you know that we are definitely interested in manufacturing a fastener of this type as this would be undoubtedly beneficial to Brown-Line Corp, Miner and Associates and Illinois Tool Works.

I am also enclosing a sketch of a thread rolled pigtail, which would be used as an installation means to drive the blind bolt which I have developed. It has been placed on file in our patent office and I thought that you may be interested in seeing that we have incorporated your suggestion and sincerely appreciate your assistance.

Yours very truly, Illinois Tool Works, Thomas R. Boyd, Executive Engineer.

TRB:AMS.

Encls.

[fol. 1261] IN THE UNITED STATES DISTRICT COURT FOR THE EASTERN DISTRICT OF MICHIGAN

DEFENDANTS' EXHIBIT No. L

November 27, 1957.

Mr. John S. Hawley,
Manager, Market Planning,
Illinois Tool Works,
2501 No. Keeler Avenue,
Chicago 39, Illinois.

Dear John:

This letter is in reply to Tom Boyd's letter of September 10 and is addressed to you as I understand that Tom is in process of moving his activities to California.

I am enclosing a copy of a letter dated November 26 from our Patent Attorney George Smyth which gives the conclusions on a possible domination of Huck Patent 2,754,703 over our Application 639474.

As you will note, Mr. Smyth's opinion is quite firm to the negative, and based upon which opinion, we would like to suggest patent license negotiation.

Looking forward to the pleasure of hearing from you soon, we remain,

Very sincerely yours, Brown-Line Corporation,
R. Looker, President.

RL/vd.

Encl.

[fol. 1262] IN THE UNITED STATES DISTRICT COURT FOR THE EASTERN DISTRICT OF MICHIGAN

DEFENDANTS' EXHIBIT No. N

HARNESS, DICKEY & PIERCE
Attorneys and Counselors
General Motors Building
Detroit 2

May 14, 1958.

File

Mr. Robert Looker,
Brown-Line Corporation,
111 Main Street,
El Segundo, California.

Dear Bob,

Thank you for your letter of May 5. Attached hereto are the four sheets of drawings, Figs. 1 through 16, which you sent me.

I am sure that you must realize that manufacture and sale of the fastener disclosed in these drawings would be infringements of the Huck lockbolt patents with which you are familiar. They could only be manufactured and sold by Huck itself or someone licensed under the Huck patents.

We look forward to seeing you and Mary when you get back to Detroit.

With best regards.

Sincerely, John Sterritt.

JCS/rp.

Encls.

[fol. 1263] IN THE UNITED STATES DISTRICT COURT FOR THE EASTERN DISTRICT OF MICHIGAN

DEFENDANTS' EXHIBIT No. O

HARNESS, DICKEY & PIERCE
Attorneys and Counselors
General Motors Building
Detroit 2

March 30th, 1960.

File

Mr. Robert Looker,
Brown-Line Corporation,
111 Main Street,
El Segundo, California.

Dear Bob,

This is in reply to your letter of March 2nd, 1960.

I have been in Europe for five weeks, and I am just getting caught up in my correspondence.

I am advised by Huck that business conditions at the present and within the foreseeable future do not justify the granting of any further licenses now.

I trust that this answers your inquiry.

With best regards, John C. Sterritt.

JCS:erb.

cc: A. W. Armour, A. E. Benkert, A. M. Stern.

[fol. 1264] IN THE UNITED STATES DISTRICT COURT FOR THE EASTERN DISTRICT OF MICHIGAN

DEFENDANTS' EXHIBIT NO. R

October 24, 1960.

Mr. Robert A. Bicks,
Assistant Attorney General,
Antitrust Division,
United States Department of Justice,
Washington, D.C.

Gentlemen:

In reply to your letter of October 20, 1960, Mr. L. C. Huck was my stepfather, and upon his death his personal possessions which were in his office at the time of his death were given to his principal heir, my mother, and his telephone notebooks from which the names given you were obtained were among such effects.

If I can do anything further to be of assistance, please do not hesitate to advise.

Sincerely yours, Brown-Line Corporation, R. Looker, President.

RL:vd

cc: Pavitt, White.

[fol. 1265] IN THE UNITED STATES DISTRICT COURT FOR THE EASTERN DISTRICT OF MICHIGAN

DEFENDANTS' EXHIBIT No. S

UNITED STATES DEPARTMENT OF JUSTICE
Washington, D.C.

RAB:LB
60-126-43

October 20, 1960.

Mr. R. Looker,
President,
Brown-Line Corporation,
111 Main Street,
El Segundo, California.

Dear Mr. Looker:

The information contained in your letter of October 12, 1960, addressed to Mr. Lipson of my staff, will be quite useful.

We note that the information was obtained from the personal effects of Mr. L. C. Huck. It would assist us to know the circumstances under which these papers came into your possession. In addition, it would be helpful if you would let us know whether or not you are related by blood or marriage to the late Mr. L. C. Huck or any of his relatives or to any other persons who were at any time officers, stockholders or employees of the Huck Manufacturing Company. If so, the complete details of such relationship would be appreciated.

Thank you for your cooperation.

Sincerely yours, Robert A. Bicks, Assistant Attorney General, Antitrust Division.

cc: Pavitt, White.

[fol. 1266] IN THE UNITED STATES DISTRICT COURT FOR THE EASTERN DISTRICT OF MICHIGAN

DEFENDANTS' EXHIBIT No: U

File

February 8, 1961.

U.S. Department of Justice
Washington, D.C.

Attn: Mr. Robert A. Bicks, Assistant Attorney General, Anti Trust Division.

Gentlemen:

I first would like to offer my congratulations to your department for the splendid work in breaking up the price fixing conspiracy in the electrical industry as reported in the local press. It appears as though a most expert job was done, and I am certain that the remainder of the electrical industry as well as the public are most grateful.

I have also to report an incident to you on an attempt to fix prices made to us by one of our competitors.

About the middle of December 1960, a Mr. Theodore Bassett, Sales Manager of the Aircraft Division of the General Logistics Division of the Aeroquip Corporation, made a luncheon date with our Sales Manager, Mr. George Christena, at "Robbs Steeplechase" restaurant in El Segundo, and during such time Mr. Bassett proposed that General Logistics Co. and Brown-Line Corporation enter into a price fixing agreement covering aircraft seat fittings and cargo tie down fittings both companies manufacture under patent license from Pan American World Airways. He cited the present close price competition on such parts giving as an example seat fittings purchased by Hardman Tool and Engineering Corp. of Los Angeles. The price for such fittings at one time was between $12.00 and $20.00 each and now with price competition is about $3.00. With price fixing in effect, Mr. Bassett indicated that we could both make a substantial profit and the buyers of our parts could select their source on engineering, quality, and service rather than price.

Mr. Bassett further said that the General Manager of General Logistics, a Mr. Lloyd Jones, had already made such a proposal (for other like products) to a Mr. Frank L. Davis, President of Davis Aircraft Products, Inc., 1191-5

Spoffard Ave., New York 59, New York, and that such proposal was denied by Mr. Davis. He further believed that Mr. Jones also called on the other member of our small industry, Eastern Rotorcraft Corporation of Doylestown, Pa., with a similar proposal which was also denied. [fol. 1267] Mr. Jones was a Sales Manager, of the Aeroquip Corp. of Jackson, Michigan, before being appointed general manager of its General Logistics division. Mr. Bassett said that Mr. Jones had told him that such price fixing was in effect in the aircraft hose business (Aeroquip's principle business) and that it worked well there.

Although Mr. Christena subsequently denied the request to enter into a price fixing agreement, we felt that the entire story may be of interest to you, particularly the hearsay information that price fixing is in effect in the aircraft (and missile) hose business which is a substantial industry. I have no personal knowledge of such a situation but the Mr. Jones—Mr. Bassett authority should be considered good.

Should you desire, Mr. Christena would be pleased to put the details of his meeting with Mr. Bassett in the form of an affidavit. Additionally, should you wish us to cooperate in any specific way, please do not hesitate to so advise.

On the Huck matter we have been somewhat anxiously awaiting the report that action would be taken. We understand that these matters take time but if you will recall we first called the Huck monopoly to your attention two and one half years ago. As the violations of the law are in this case substantial and easily provable, we ask again that prompt action be taken.

On Mr. Armour's attitude, it was reported to me by another not long ago that Mr. Armour has declared that he will fight his case "if it takes my last cent", that it was a matter of principle. If this proves to be true your department may have a good court case to which to look forward, but in any event we ask for prompt and decisive action to free the lockbolt and blind rivet industry and users from illegal burdensome monopoly.

Very sincerely yours, Brown-Line Corporation, R. Looker, President.

RL:vd

cc: Pavitt.

[fol. 1268] IN THE UNITED STATES DISTRICT COURT FOR THE EASTERN DISTRICT OF MICHIGAN

DEFENDANTS' EXHIBIT NO. V

File

April 10, 1961.

United States Department of Justice
Washington, D.C.

Attention: Mr. Lee Loevinger, Assistant Attorney General, Anti-Trust Division

Dear Mr. Loevinger:

Many thanks for your letter of April 4, 1961. You can expect to hear from Mr. Christena promptly.

We were disappointed to hear that no action has been taken on the Huck matter. Our company and others have been victim to the harassments of an illegal patent monopoly and have provided substantial evidence to your department clearly indicating the need for public action. Two and one half years have passed since complaint against such illegal monopoly was made, and in the interim harassment continues and the statute of limitations runs out on offences one by one.

In our attempt to understand the reasons for delay in these matters we have questioned those skilled in Anti-Trust litigation and have thus been led to understand that your department negotiates with offenders of the Anti-Trust statutes, and that this is the probable cause of the delay noted.

As the matter is still with the Grand Jury in Detroit, unless you have further evidence for it, we respectively ask that it be asked for its decision. If it is the policy of your department to negotiate with, or otherwise contain, offenders, of the Anti-Trust statutes we request that we be so informed.

Looking forward to the pleasure of hearing from you further in this matter, I remain

Very sincerely yours, Brown-Line Corporation,
Robert Looker, President.

RL/vd

[fol. 1269] IN THE UNITED STATES DISTRICT COURT FOR THE EASTERN DISTRICT OF MICHIGAN

DEFENDANTS' EXHIBIT NO. W

July 26, 1961.

Mr. Lee Loevinger, Assistant Attorney General
Anti Trust Division
U.S. Department of Justice
Washington, D.C.

Dear Mr. Loevinger:

It has been some time since I wrote you on the Huck matter and since that time I have seen the Huck patent attorney, Mr. John C. Sterritt, on several occasions, as I am involved in a patent office interference on Huck's behalf on an invention I made while employed by Huck, and have employment contractual obligation to Huck to assist in prosecution of patents made while in Huck's employ and thereby assigned to Huck.

At one time Mr. Sterritt told me that the investigations and hearings by your department had been costly to Huck (in what way I do not know) and that it was Huck's opinion that our company, or myself in particular, had "incited" your department into conducting the useless investigations and that unless indictments come from the Grand Jury in Detroit Huck would take action against either Brown-Line Corp. or myself (Mr. Sterritt did not make this clear). Mr. Sterritt indicated to me that this was Mr. Armour's decision.

Although we have been unable to collaborate having any liability to Huck, we will admit to being a little nervous and therefore ask if one certain legal point had been considered on the price fixing matter.

As you know prices for lockbolt pins and collars were fixed in the Huck-Townsend patent agreement for a 2-year period and extended by verbal agreement between Mr. Armour, and Dickenson. The lockbolt collars also have very substantial use with unpatented lockbolt "stumps" (later licensed also to Townsend by Huck on "Know-how" basis) and that this substantial supplementary application

was known to both parties at the time prices were fixed.

Assuming first that price fixing in a patent agreement is legal the point of law which comes to mind is, is price fixing in a patent agreement for a part of the patented combination (collars) which has substantial unpatented use (with stumps and therefore by statute free of patent incumberance) also legal.

[fol. 1270] It would seem not to me, as it would then be legal to fix prices on, for example, all sales of a motor of a patented motor-pump combination in a patent license when the motor had substantial non-infringing use. By this means prices could be legally fixed on almost any article of commerce and the only expedient would be to get such item included as part of a patented combination. An important point is that lockbolt pins and collars are sold separately as are lockbolt stumps and (at least for the airframe industry) the same collars are used on lockbolt pins and stumps. Additionally most aircraft lockbolt users buy and use both pins and stumps and buy collars for both at one time, lockbolt parts generally considered "open stock" materials, and that prices were fixed for the collars as well as the pins by agreement.

I am quite certain that the point is well covered but in the event that it had not I thought it well to bring up.

Very sincerely yours, Brown-Line Corporaston,
R. Looker, President

RL:vd

[fol. 1271] IN THE UNITED STATES DISTRICT COURT FOR THE EASTERN DISTRICT OF MICHIGAN

DEFENDANT'S EXHIBIT No. X

October 27, 1961.

Mr. J. L. Lipson,
U. S. Department of Justice,
Anti Trust Division,
Washington 25, D.C.

Dear Mr. Lipson:

I have just read the indictment and civil complaint on the Huck matter, and it appears as though the Grand Jury arrived at a reasonable decision. My congratulations to you and to those who assisted you in the preparation and presentation of the facts to the grand jury.

In contemplating possible defense, if I am called upon to testify for the plainti-f, there could be lik-lihod of defense trying to show malice or prejudice in an attempt to discount any testimony I may be called upon to give. In preparation you might keep in mind that it can be proved to the contrary, as:

1. Recently I testified freely as a friendly witness for Huck in a patent interference case with Olympic (see enclosed letter copies).

2. Where Brown-Line has had application for blind rivets or lockbolts or driving tool parts I have personally insured that Huck parts were called out and procured from Huck despite the fact that in each case competitive devices were available and despite the fact that Huck has had in effect a policy of selling parts to Brown-Line only after the end use were clearly made known to Huck and Mr. Armour, personally approved Hucks acceptance of Brown-Line orders on an individual basis. Procurement records are available here covering about 4 years procurement.

3. I have given Huck a full 20% distributor discount on Brown-Line Collar Splitters and spare parts purchased by Huck for resale purposes, shipping parts

usually immediately and on open credit, despite Hucks refusal to negotiate a distributorship agreement.

Very sincerely yours, —— ——.

[fol. 1272] IN THE UNITED STATES DISTRICT COURT FOR THE EASTERN DISTRICT OF MICHIGAN

DEFENDANT'S EXHIBIT NO. Y

Huck Manufacturing Company
Departmental Correspondence

Date: August 11, 1955.

Subject: License.

To: A. W. Armour.

From: R. Looker.

Copies: Benkert, Mathews, Sterritt, File. √

As you know, George Mathews has just returned from a trip to Rockford, Illinois, where he called upon the Camcar Manufacturing Company in connection with our developing a good suitable second source for collar fabrication.

Ray Carlson, their vice president, was a good friend of Lou Hucks' and I know that Mr. Huck always spoke very highly of Carlson. He made it known to George that he is very interested in any possibility which might exist insofar as the development of a CKL License might be concerned and I believe that in the Camcar Manufacturing Company we might have the combination of factors pointing to a good licensee for the CKL Rivet. I realize that they are a comparatively small manufacturer in comparison to some of the larger people such as Elastic Stop Nut and Lamson & Sessions, but they are very highly thought of in the aircraft industry and have in operation a good aircraft sales force. In addition they are thought of to be very high quality manufacturers and have a great deal of know-how which would be of invaluable aid to anyone who starts out with the Conical Keystone Rivet. With this in mind, I would like to suggest that possibly you and I travel to

Rockford to examine their facilities and learn something about their company's operation with the possible thought in mind that they would be considered to be a suitable licensee for the CKL Rivet.

I believe that we should also devote some thought to the consideration of Lamson & Sessions for a Lockbolt License which would be limited specifically to a lockbolt suitable for structural attachment on heavy building structures.

As you know, the so called high tensile bolt is making very remarkable advances in replacing solid rivets for building construction and I believe that we can safely say that a lockbolt would be far preferable to the highly torque high tensile bolts which are now being used in very great tonnage for building construction.

Although we may not be at liberty to grant such a license at this time, we will be in a little over a year from now and it would take at least that long to get suitable fasteners and tools developed for this market which could be handled by the Lamson & Sessions Company.

Steel lockbolts of 5/8" and 3/4" diameter would be most generally used to replace the comparable diameter high tensile bolt and possibly this market would also demand a 1" diameter Huckbolt and may be even up to 1½".

These suggestions are made with the thought in mind that our seventeen year lockbolt patent should be utilized as freely as prudent so that our total income from the patent can be a major factor in our business without helping to cause any machinery which we own to sit idle. Considering Lamson & Sessions as a licensee for a high tensile Huckbolt to take the place of high tensile bolts in building construction work, would we believe, serve this purpose and they are, I believe, quite anxious to enter into the market.

Very sincerely yours, R. Looker.

RL:mcw

DEFENDANTS' EXHIBIT NO. Z

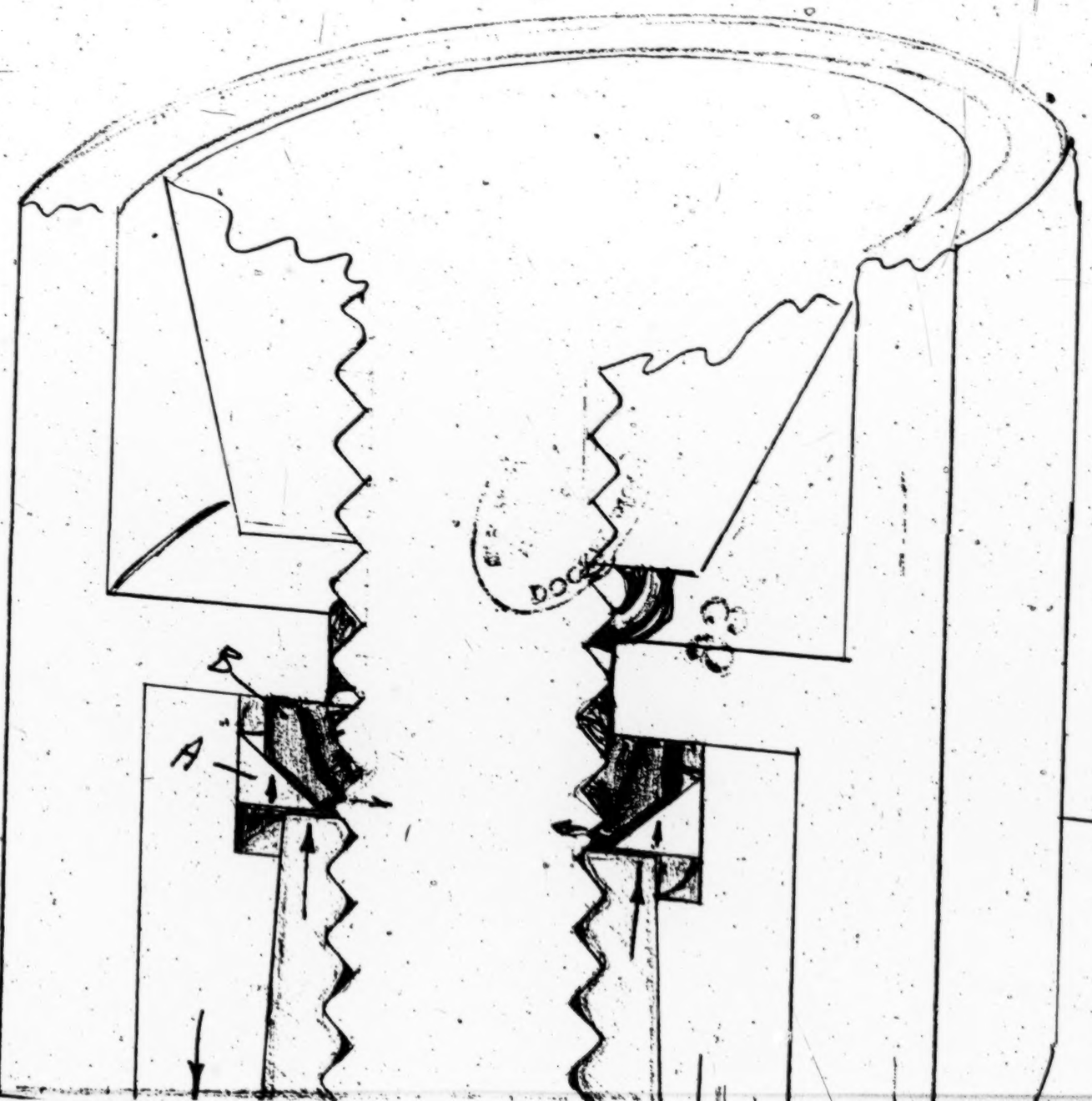

Dept-Head Ex
Dept. Ext
Docket No.
Easr. Dist. of Mich
U. S. District Court

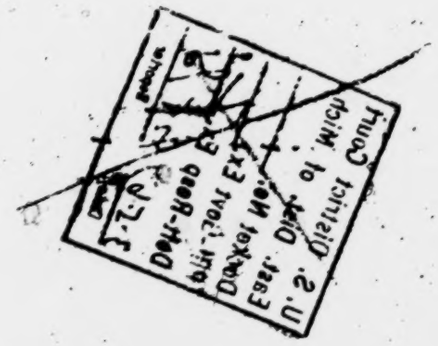

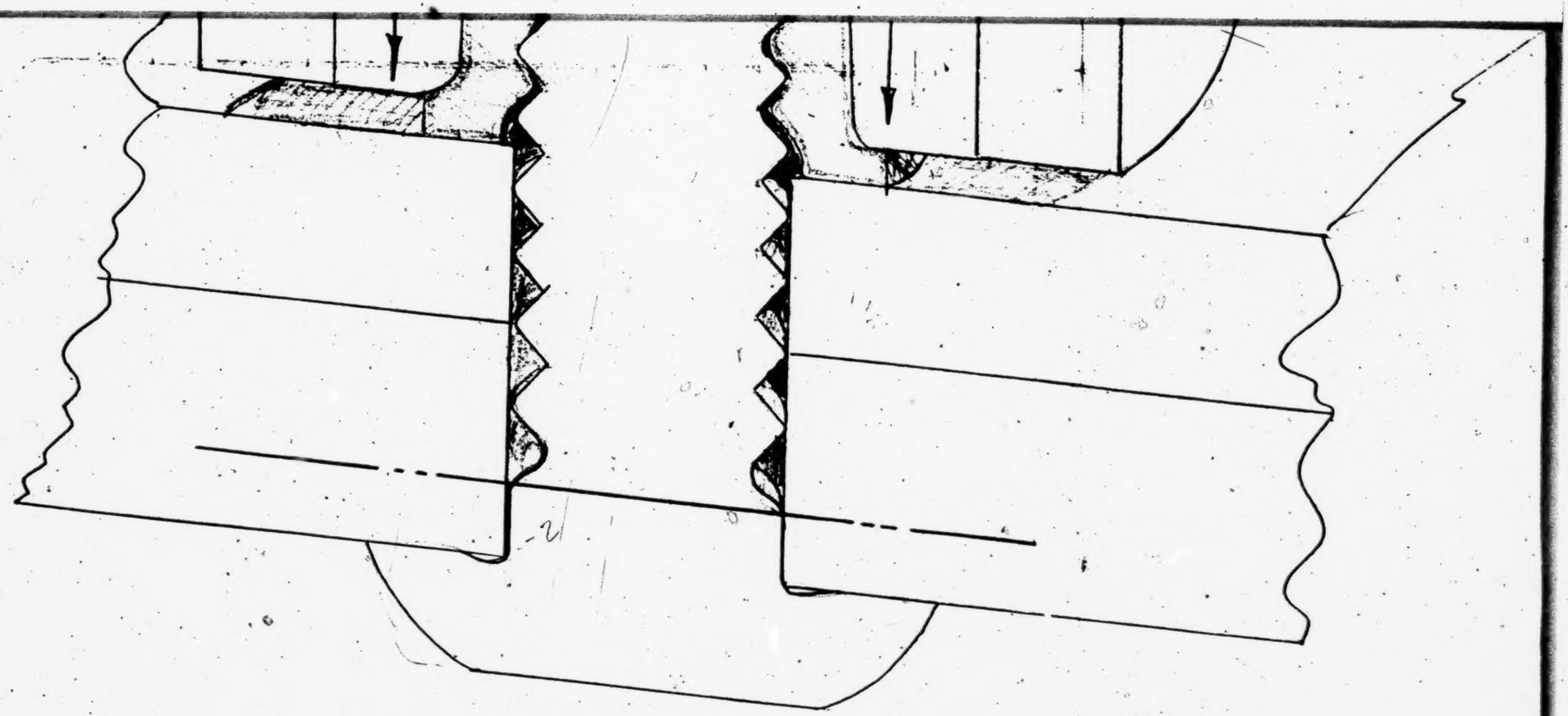

Egnor v Fooker
Interference # 93815
Junior Party Exhibit #3 (5/26/64
Witness: Fooker
Ptm, Notary

#3

FRACTIONAL DIMENSIONS
TO BE HELD ± .010

#3

Sam Egrot
10-8-54

Witness R Hooker 10/18/54.
Frank Dobbe - 10/18/54

★ STAMP
★ ETCH

CHANGES		
LET.	WAS	DATE

HUCK MANUFACTURING CO.
2480 BELLEVUE AVE.
DETROIT 7, MICH., U. S. A.

TITLE

MATERIAL

HEAT TREATMENT

SCALE ____ =1 FT.
DATE ____
DR. BY ____
CH. BY ____
APP. BY ____

[fol. 1274] IN THE UNITED STATES DISTRICT COURT FOR THE EASTERN DISTRICT OF MICHIGAN

DEFENDANT'S EXHIBIT No. AA

Huck Manufacturing Company
Specialists in Cold Heading
Riveting and Fastening Processes
2480 Bellevue Avenue
Detroit 7, Michigan

D. T. for June 1, '55—JCS

October 19, 1954.

Mr. John C. Sterritt,
Harness, Dickey & Pierce,
7-141 General Motors Bldg.,
Detroit, Michigan.

Dear John:

Attached to this letter you will find a drawing made by a man in our Field Engineering Department, Mr. Sam Egnot, showing a possible Huckbolt variation which may have a very substantial commercial value and which should be considered to be held until we see if it works. The substance of the invention is shown as follows.

In much commercial work it is necessary to have a comparatively wide grip range and in those cases where a wide grip range is necessary, it is not necessary to have a substantial portion of the Huckbolt shank bearing against the walls of the hole. We therefore can make a Huckbolt having only locking grooves with no pull grooves, no shank, or very little shank, and no breakneck. Such a Huckbolt would have the advantage of having an unlimited grip range being installable if the pin were long enough to reach the jaws of the tool.

Egnot's drawing attached shows a device for cutting off the pin after the fastener has been swaged. You will note that the small collar labeled "A" bears against the top of the collar at final swage, forcing the section "B" against the pin. We know that if a piece of material is pulled in tension and there is substantial compression at a point the pin will break at that point because of interaction of forces

there. The device shown is not necessarily one which will be the final answer for the forces could be transmitted to compression section "B" either by the anvil bearing against the top of the collar or by the anvil forces available if the anvil touches the sheet through some mechanical linkage to the compression section.

Our Field Engineering Department is investigating this possibility as their time permits and if it does appear to be something which is practical from a manufacturing and installation standpoint, we are sure that it will be practical from a marketing standpoint and we will therefore possibly ask you to process a patent application.

Very sincerely yours, Huck Manufacturing Company, Robert Looker, Vice President in charge of Sales.

RL:rm

Received October 20, 1954, Harness, Dickey & Pierce, Detroit, Mich.

Attention of: J. C. S. √

[fol. 1275] Egnot v. Looker

Interference # 93815

Junior Party Ex. # 5 (5/26/64)

Witness: Looker

J.S.M., Notary

[fol. 1276] IN THE UNITED STATES DISTRICT COURT FOR THE EASTERN DISTRICT OF MICHIGAN

DEFENDANT'S EXHIBIT No. BB

BROWN-LINE
Corporation

June 2, 1961.

Mr. John Sterritt,
Harness, Dickey & Pierce,
7-141 General Motors Bldg.,
Detroit, Michigan.

Dear John:

Recalling our conversation at dinner, I would like to check out the Egnot disclosure to see if it anticipated our patent 2,978,946 (which incidentally is awaiting proofing). If it does I would like to know it before we proceed with licensing and/or marketing plans.

Incidentally, I have heard third hand that Huck has claimed to Butler that "Looker's lockbolt comes within Huck lockbolt claims." This I don't get as nothing has been done to even develop the invention as yet, let alone market it.

Perhaps you can't answer the Butler thing (although I wish you would) but the Egnot disclosure should be sent, or we will have to assume that Huck has changed its mind and have decided that they were in error, and that the Egnot disclosure does not anticipate our patent 2,978,946.

My memory of the disclosure is a little hazy. I recall the large drawing with different colors on it and recall witnessing it. In fact it was drawn at my request so that we would have a defendable disclosure in the event we wanted to file on it. Otherwise my memory needs refreshment.

Your help in settling this will be appreciated. If we have issued an invalid patent, we want the patent office to revoke

it, and if we have a valid patent, we want to get the product going.

Very sincerely yours, Brown-Line Corporation, R. Looker, President.

RL:vd

Received June 5, 1961, Harness, Dickey & Pierce, Detroit, Mich.

[fol. 1277] IN THE UUITED STATES DISTRICT COURT FOR THE EASTERN DISTRICT OF MICHIGAN

DEFENDANTS' EXHIBIT No. CC

April 11, 1961 R. LOOKER 2,978,946

GROOVED PIN WITH REFORMABLE COLLAR TO ACCOMMODATE VARIOUS THICKNESSES

Filed Feb. 11, 1957 4 Sheets-Sheet 1

Fig. 1

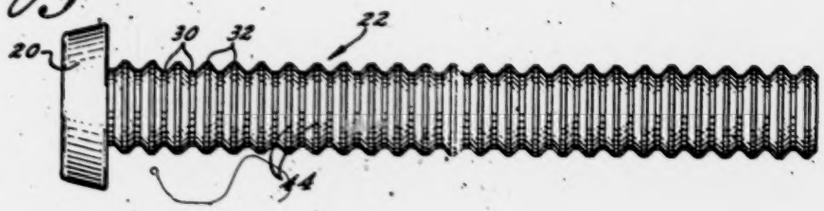

Fig. 2

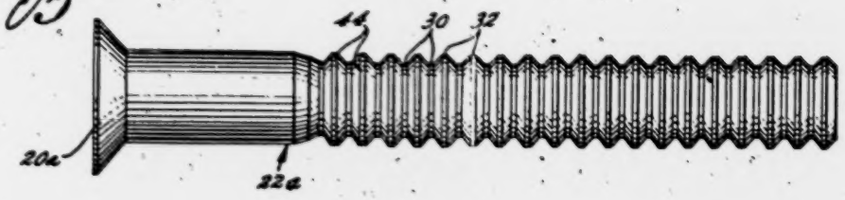

Fig. 3

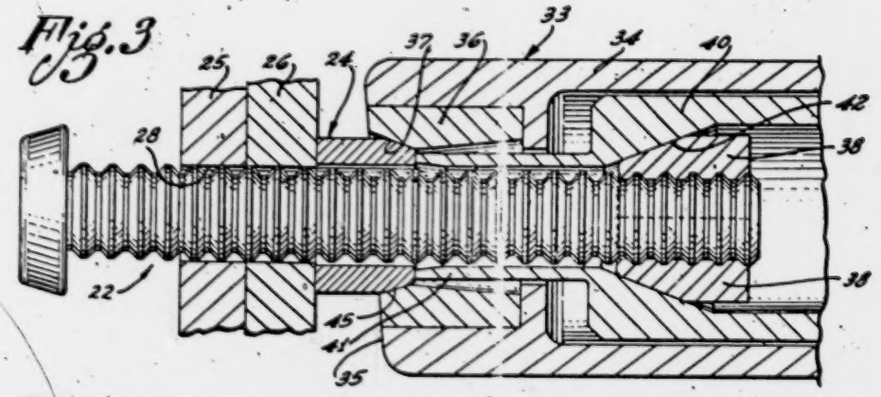

Fig. 4

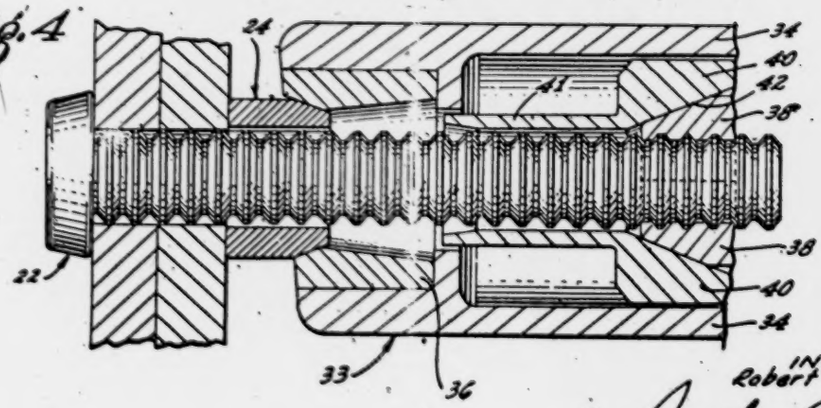

INVENTOR
Robert Looker

By Smyth & Roston
Attorneys

681

April 11, 1961 R. LOOKER 2,978,946

GROOVED PIN WITH REFORMABLE COLLAR TO ACCOMMODATE VARIOUS THICKNESSES

Filed Feb. 11, 1957 4 Sheets-Sheet 2

Fig. 5

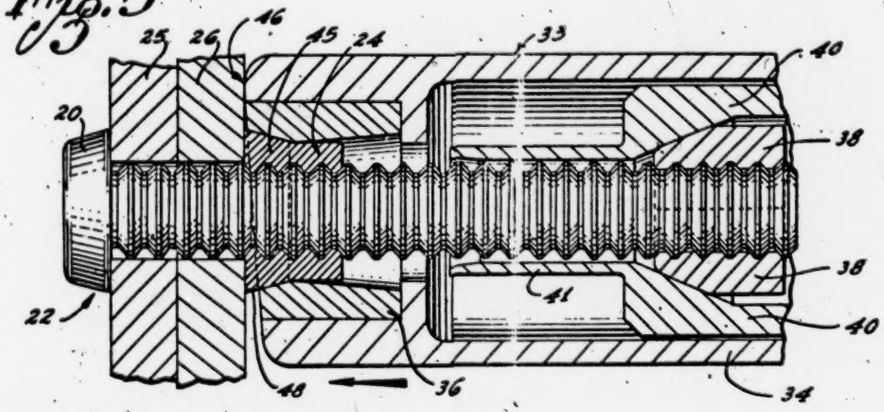

Fig. 6

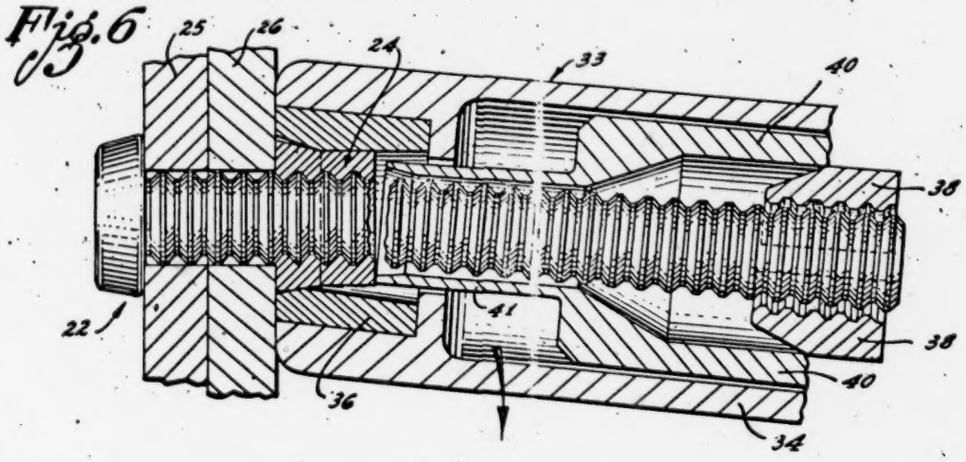

Fig. 7

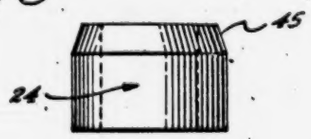

Fig. 8

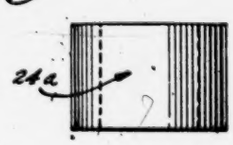

INVENTOR:
Robert Looker

By Smyth & Roston
Attorneys

April 11, 1961

R. LOOKER

GROOVED PIN WITH REFORMABLE COLLAR TO ACCOMMODATE VARIOUS THICKNESSES

2,978,946

Filed Feb. 11, 1957

4 Sheets-Sheet 3

Fig. 9

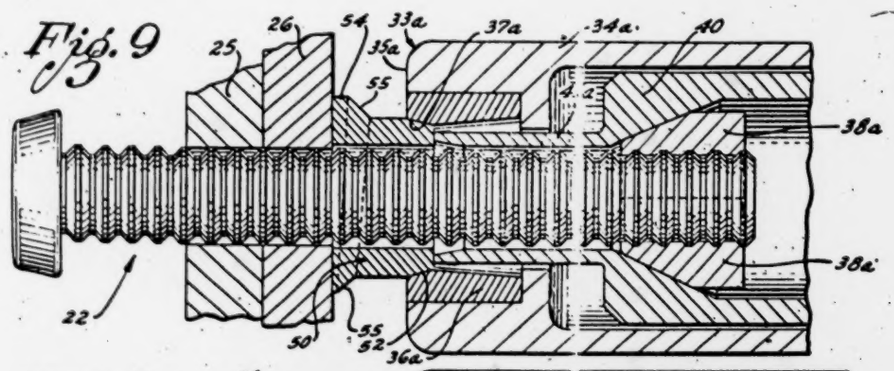

Fig. 10

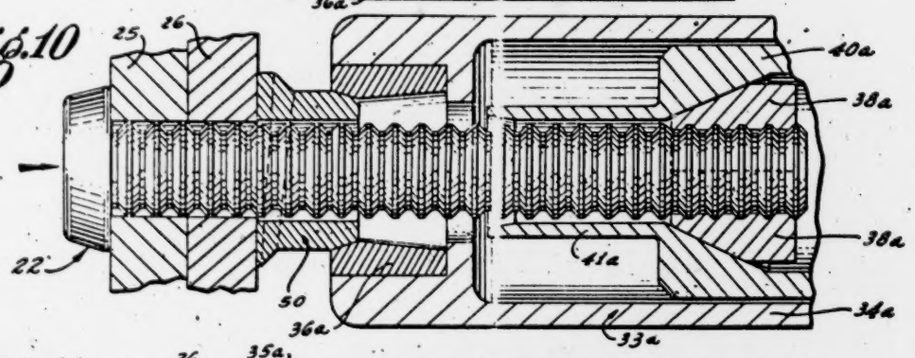

Fig. 11

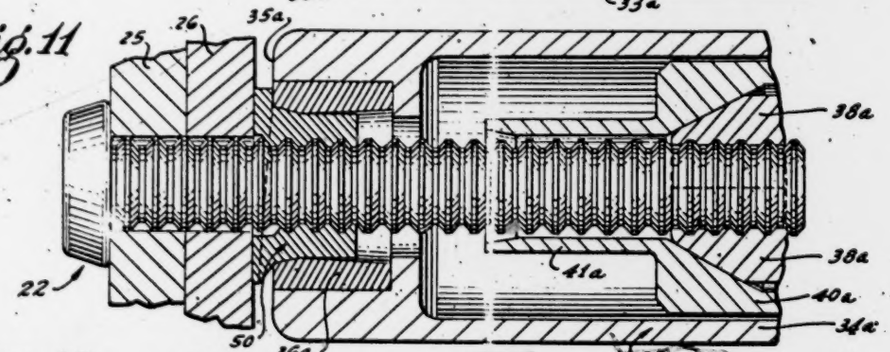

Fig. 12

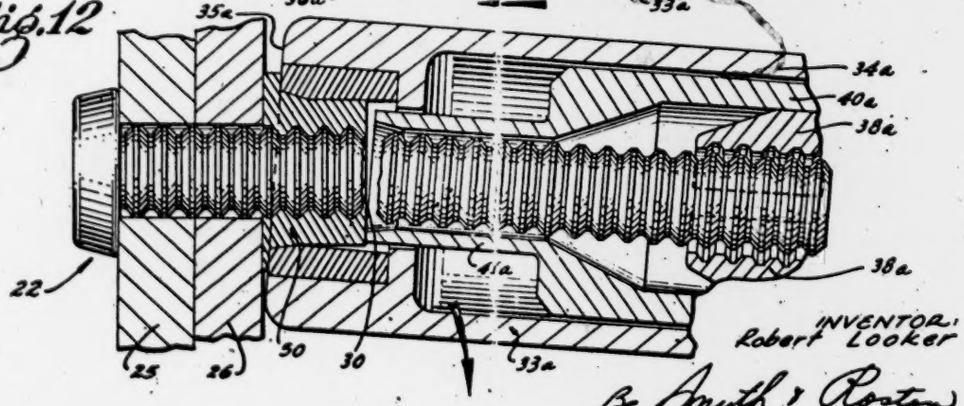

INVENTOR:
Robert Looker

By Smyth & Roston
Attorneys

683

[fol. 1280] **April 11, 1961** R. LOOKER **2,978,946**

GROOVED PIN WITH REFORMABLE COLLAR TO ACCOMMODATE VARIOUS THICKNESSES

Filed Feb. 11, 1957 4 Sheets-Sheet 4

Fig. 13

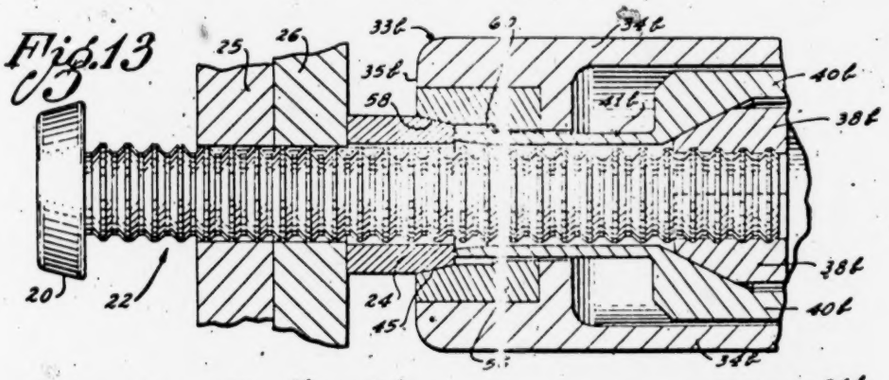

Fig. 14

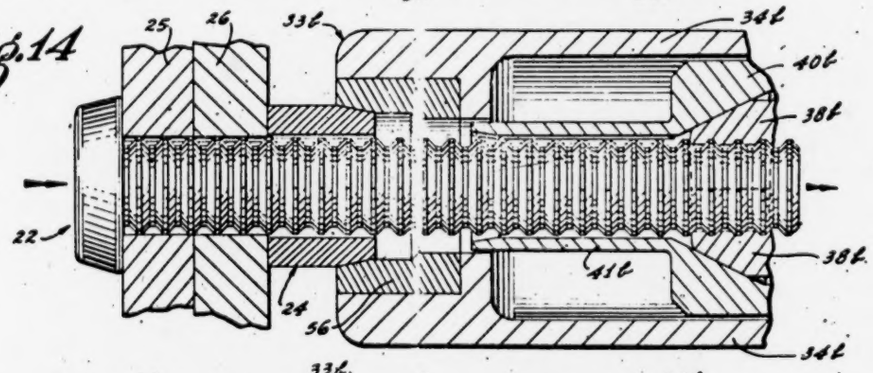

Fig. 15

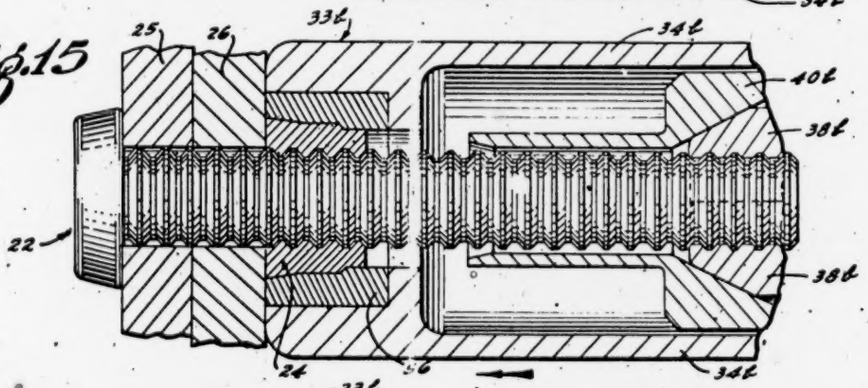

Fig. 16

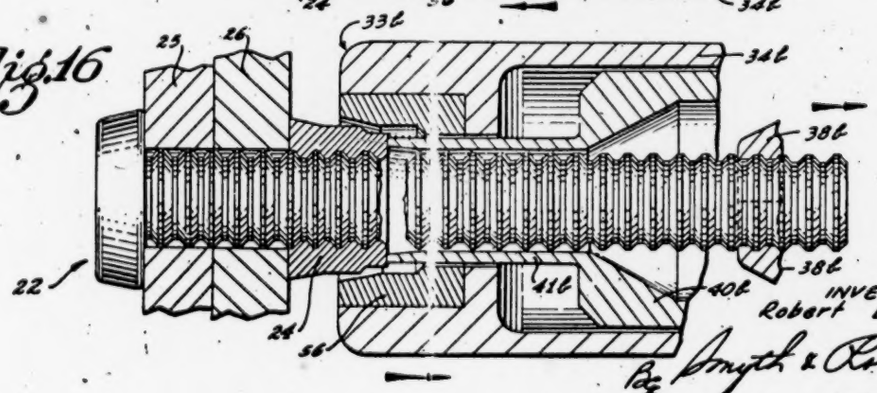

INVENTOR:
Robert Looker

By Smyth & Roston
Attorneys

684

[fol. 1281]

United States Patent Office 2,978,946 Patented Apr. 11, 1961

2,978,946

GROOVED PIN WITH REFORMABLE COLLAR TO ACCOMMODATE VARIOUS THICKNESSES

Robert Looker, Santa Monica, Calif., assignor to Brown-Line Corporation, El Segundo, Calif., a corporation of California

Filed Feb. 11, 1957, Ser. No. 639,474

4 Claims. (Cl. 85—5)

This invention relates to a fastener in the form of a lockbolt for interconnecting a plurality of members such as metal plates, which lockbolt comprises a headed pin for insertion into aligned openings of the plurality of members with a head on one end of the pin to engage one side of the plurality of members and a deformable collar swaged onto the shank of the pin in engagement of the other side of the plurality of members. What may be termed a driving tool is customarily used to install such a device, the driving tool having two sections axially movable relative to each other. One section of the driving tool has jaws to engage the end of the pin to pull the pin into its installed position with the pin under tension. The other section of the driving tool has what is commonly termed an anvil in the form of an annular member to engage and swage the deformable collar in reaction to the tension force that is applied to the pin.

Different portions of the shank of a pin member of such a lockbolt have different functions. A first portion of the shank immediately adjacent the pin head ultimately fills the aligned openings of the plurality of members and therefore its primary requisite is to fit the holes with sufficient snugness to hold the holes in permanent alignment. A second portion of the shank adjacent this first portion must be suitably serrated for positive locking engagement by the deformable collar. A third portion of the shank immediately adjacent this second portion is weakened to form a break neck where the surplus end portion of the pin may be broken off to complete the installation procedure. A fourth shank portion extending to the end of the pin must be suitably serrated for positive engagement by the jaws of the driving tool.

Heretofore, each of these portions of the pin shank has been specialized for its particular purpose. The first shank portion may, for example, have a smooth cylindrical configuration for forced or snug fit into the aligned holes of the plurality of members. The second shank portion may comprise a series of teeth, or ribs, or the like for positive engagement by the deformable collar. The third portion is formed with a relatively deep circumferential groove which provides the weakest part of the shank where the pin is to be broken off. The fourth or end portion of the shank is of suitably serrated configuration for positive engagement by the jaws of the driving tool.

It is apparent that the first portion of the shank adjacent the head of the pin must be accurately dimensioned in length in accord with the total thickness of the plurality of members that are to be secured together. Making this first shank portion too short causes a number of difficulties. One difficulty is that some serrations of the second portion will be positioned inside the aligned openings of the member and these serrations as conventionally formed are not efficient for alignment of the holes of the plurality of members. In the second place, the extent to which this second portion of the shank lies in the aligned openings reduces the extent to which the second shank portion is available for engagement by the deformable collar and thus, reduces the effective strength of the installed lockbolt. In the third place, the breakneck portion may be shifted into the interior of the deformable collar where it is not readily accessible for severance and where severance would seriously weaken the effective strength of the installed lockbolt.

On the other hand, making the first shank portion of the pin too long also results in troublesome difficulties. In the first place, part of the first shank portion extends into the interior of the collar, and since this part is not adapted for positive engagement by the collar, the effective strength of the installed lockbolt is correspondingly reduced. In the second place, the third or breakneck portion of the shank is shifted to an excessive distance from the outer end of the deformable collar so that when the pin is severed at the breakneck portion, the remaining installed portion of the pin is unduly long.

To avoid these difficulties, conventional lockbolts are made in different lengths with the first shank portion of the lockbolts necessarily manufactured especially to suit the total thickness of the plurality of members being joined together. One consequence of specializing the pins in this manner for different total member thicknesses is that it is necessary to purchase and stock a relatively large number of different lengths of the lockbolts to cover a usual range of total member thicknesses found to exist in most assemblies so joined together, since there is always a possibility that one size will be exhausted at a critical time. Another consequence is that the burden is placed on the craftsman to select the different lockbolts with care to fit different installations, since an error usually means that the misfit lockbolt must be removed and discarded with consequent waste of time and material. Having many different sizes to purchase also means higher material cost as price varies inversely with quantity of any one size.

The present invention is directed to the problem of avoiding all of these difficulties and undesirable consequences. The attainment of this purpose is based on the concept of avoiding specialization of the different shank portions, or at least of minimizing differentiation among the shank portions. In fact, in the preferred practice of the invention there is no differentiation whatsoever and all of the four mentioned shank portions are capable of performing all of the described functions with equal effectiveness.

This concept makes it possible to use a single headed pin for securing together pluralities of members having a wide range of total thicknesses. Only one pin need be stocked for the whole range of total member thicknesses and the craftsman is relieved entirely of the burden of selecting particular pins for particular installations.

It will be apparent to those skilled in the art that this basic concept may be carried out in various ways in various practices of the invention. In the preferred practice of the invention, a pin is provided of the maximum length required for a given range of total member thicknesses and the pin shank is provided with a series of axially spaced uniform recesses starting at a point sufficiently close to the pin head and extending to the end of the pin. This point is at least close enough to the head to lie in the inner end of the deformable collar when used with a plurality of members of minimum total thickness in the given range of total member thicknesses. If desired, however, the series of uniform recesses may extend right up to the pin head.

In the preferred practice of the invention, the shank recesses comprise uniformly spaced circumferential grooves which form uniform intervening circumferential ribs, the shank being undifferentiated throughout the length of the recessed portion. With the ribs of an

outside diameter to fit snugly into the aligned holes and with the ribs adequately closely spaced relative to the thickness of the individual members of the pluralities of members, the uniformly grooved portion of the shank is capable of holding the holes in the pluralities of members in permanent alignment. The statement that the ribs are adequately closely spaced relative to the individual members means that the spacing between the successive ribs must be substantially less than the minimum thickness of the individual members of the plurality of members that are to be secured together by the pin. Such close spacing of the ribs insures that at least one rib will extend into the space defined by the planes of the opposite faces of each of the plurality of members for positively maintaining the member in accurate alignment with the adjacent members. As will be made apparent, it is contemplated in one practice of the invention that the ribs will be so dimensioned and spaced relative to the thickness of the members to be secured together that at least two ribs will engage each of the members to insure accurate alignment of the openings of the members. The grooves and ribs provide a serrated configuration for highly effective engagement of the shank by the deformable collar. Each of the grooves is capable of serving as a breakneck so that the grooves may be employed selectively as breaknecks as required by the given range of total member thicknesses. Finally, the serrated configuration provided by the grooves and ribs makes it possible for the jaws of the driving tool to grip the end of the pin shank with the desired effectiveness.

A certain problem arises with regard to the function of the circumferential grooves as selective breaknecks. The use of tension stress in the prevalent prior art practices to cause severance of a breakneck portion requires that the breakneck portion be greatly weakened. One reason for greatly weakening the pin at this point is that the single breakneck of the prior art fastener must be the weakest point of the pin by a liberal margin to make sure that the shank breaks off at this particular point in response to the final tensioning of the pin. A second reason for greatly weakening the pin at the breakneck is to keep the required magnitude of tension force within practical limits. Obviously if such a highly weakened point of the shank were positioned in the aligned holes of the plurality of members or were even positioned inside the deformable collar, the effective strength of the installed lockbolt would be reduced to an unacceptable degree. The problem, then, is to provide spaced circumferential grooves that are deep enough for selective use as breaknecks but, nevertheless, provide sufficient strength to carry the tensile load required of the installed lockbolt.

The present invention solves this dilemma by combining two separate forces to break off the pin at circumferential grooves selectively. The first force is the usual tension force for straining the shank longitudinally. The second force is a localized transverse force. The addition of this second transverse force has two advantages. One advantage is that the combining of the two forces makes it possible to break the shank at the axially spaced grooves without requiring that the axially spaced grooves be so deep as to weaken the lockbolt unduly. The second advantage is that the transverse force may be selectively localized to cause the pin to break off at any selected circumferential groove.

The second transversely applied stress may be, for example, either a localized bending stress or a localized transverse compression stress. The compression stress may be, if desired, radial compression applied uniformly around the circumference of the pin shank.

A further and important feature of the invention is that a driving tool of a well known type can be used not only to install the lockbolt but also to provide the second transverse stress automatically as soon as the deformable collar is adequately swaged into positive engagement with the pin shank. In one practice of the invention, the driving tool has a canted leading end or nose that fulcrums against the plurality of members to create the second transverse stress automatically when the collar is adequately swaged. In another practice of the invention, the driving tool has a nose of normal configuration but the deformable collar cooperates with the driving tool to cause the canting movement of the tool for creation of the second transverse stress. In still another practice of the invention, the driving tool has two successively effective swaging elements, the first element swaging the collar into positive engagement with the pin shank and the second swaging element radially compressing the swaged collar at its outer end to cause correspondingly localized radial compression of the pin shank.

The various features and advantages of the invention will be apparent from the following detailed description considered with the accompanying drawings.

In the drawings, which are to be regarded as merely illustrative:

Figure 1 is a side elevation of a headed pin employed in one practice of the invention, the whole length of the shank of the pin being provided with uniformly spaced circumferential grooves;

Figure 2 is a similar view of another headed pin that may be employed wherein the series of circumferential grooves starts at a substantial distance from the pin head;

Figures 3, 4, 5 and 6 show successive stages in the procedure of installing the pin of Figure 1 by means of a driving tool, the driving tool having a canted nose or leading end to create a correctly timed localized bending moment for severance of the tension pin shank at a selected circumferential groove;

Figure 7 is a side elevation of the deformable collar shown in Figures 3 to 6;

Figure 8 is a side elevation of a deformable collar of slightly different configuration that may be employed;

Figures 9, 10, 11 and 12 are stages in a second installation procedure wherein a conventional driving tool cooperates with a deformable collar that has a peripheral shoulder to cause the required canting of the driving tool automatically after the deformable collar is swaged into engagement with the pin shank;

Figures 13, 14, 15 and 16 illustrate the stages in a third procedure for installing the pin of Figure 1 by means of a driving tool, the driving tool being provided with two successively effective swaging elements, the second of which constricts the swaged collar near its outer end to create localized radial compressive stress in the pin shank to cause the pin to break at a corresponding circumferential groove.

Figure 1 shows a pin with a head 20 and a shank, generally designated 22, that, as shown in Figures 3 to 6, may be employed with a deformable collar 24 to interconnect a plurality of members, such as a pair of plate members 25 and 26 having aligned openings or bores 28 therein. The shank 22 has a series of circumferential grooves 30 which are preferably uniformly spaced to form a series of uniform intervening circumferential ribs 32. In the preferred practice of the invention, it is contemplated that the installation will be accomplished by means of a driving tool of the general character disclosed in the Huck et al. Patent 2,053,718; the Huck et al. Patent 2,053,719; the Huck Patent 2,114,493; and the Huck Patent 2,527,307.

As indicated in Figures 3 to 6, a driving tool of this character, generally designated by the numeral 33, has two sections adapted for axial movement relative to each other. One section includes a barrel 34 having a leading end face 35, this barrel carrying an anvil or annular swaging element 36 for constricting the deformable collar 24 into positive engagement with the pin shank 22. For this purpose, the swaging element 36 has a tapered annular surface 37 at its leading end adapted to slide onto

989

[fol. 1283]

the deformable collar 24 with the desired constricting swaging effect. The second section of the driving tool includes a radially expansible and contractable set of jaws 38 and a surrounding cylindrical jaw-actuating member 40. The member 40 has a tubular extension 41 and is formed with a tapered inner surface 42 for cooperation with the set of jaws 38 to constrict the jaws into positive engagement with the pin shank 22.

In Figure 1, the series of grooves 30 extends all the way from the outer end of the pin shank to the head 20. It is to be understood, however, that the distance from the pin head to the first groove of the series of grooves may be as short as the minimum total thickness of a plurality of members in the contemplated range of total member thicknesses for which the lockbolt is designed. For example, if the lockbolt that includes the pin shown in Figure 1 is to be used to interconnect a plurality of plate members varying in total thickness from a minimum of ⅜ of an inch to a maximum of an inch or more, the series of circumferential grooves 30 may start at a point ⅜ of an inch from the pin head. Thus, Figure 2 shows a second pin having a tapered head 20*a* and a shank 22*a*. The shank 22*a* has the usual circumferential grooves 30 forming intervening ribs 32 but a portion of the shank adjacent the head 20*a* is of smooth cylindrical configuration. The length of this smooth portion is the minimum thickness in the contemplated range of total thicknesses of the pluralities of members for which the lockbolt is designed.

As may be seen in Figures 3 to 6, the outside diameter of the circumferential ribs 32 approximates the inside diameter of the openings 28 in the members 25 and 26 so that the ribs fit into these openings with sufficient snugness to hold the openings in permanent alignment when the lockbolt is completely installed. The circumferential ribs 32 may have cylindrical peripheral surfaces 44 or the ribs may be rounded in cross section if desired.

The grooves 30 and the ribs 32 provide a serrated configuration for high effective engagement by the collar 24 as well as for highly effective engagement by the set of jaws 38. It is further to be noted that the grooves 30 are of sufficient depth to permit the pin to be broken off at a selected groove by the application of stress in tension together with the application of a transverse stress as heretofore, described. This groove depth, however, is much less than the groove depth required for the breakneck of a conventional pin.

The leading end face 35 of the driving tool 33 used in Figures 3 to 6 is canted, i.e. inclined away from the usual plane perpendicular to the longitudinal axis of the tool. Thus, as shown in Figures 3 to 6, the leading end face 35 of the driving tool 33 is initially inclined out of parallel to the two plate members 25 and 26.

In the installation procedure illustrated by Figures 3 to 6, the headed pin is first inserted into the aligned openings 28, the deformable collar 24 is slipped over the end of the pin, and then the driving tool 33 is manipulated to cause the jaws 38 to grip the end of the serrated pin shank as shown in Figure 3 with the swaging element 36 abutting a tapered end surface 45 of the deformable collar 24. It is apparent that to make this procedure possible for interconnecting pluralities of members of varying total thicknesses over a range from a given minimum total thickness to a given maximum total thickness, the length of the shank of the serrated pin must be substantially greater than the given maximum total thickness plus the axial dimension of the deformable collar to insure that a portion of the pin will extend beyond the deformable collar for engagement by the jaws of the driving tool.

In a well known manner, the set of jaws 38 exerts pull on the headed pin with the reaction force of the pull exerted against the deformable collar 24. Consequently the pull on the headed pin draws the pin to the position shown in Figure 4 with the head 20 in abutment with one side of the plurality of members 25 and 26 and with the deformable collar 24 in abutment against the other side of the plurality of members. The reaction force exerted against the collar 24 in response to this initial axial displacement of the pin is not sufficient to deform the collar to any significant degree.

With continued movement of the set of jaws 38 axially away from the swaging element 36, the reaction force exerted against the deformable collar 24 causes the tapered restricting surface 37 to slide over the length of the collar 24 with consequent radial constriction of the collar into positive engagement with the serrated pin shank as shown in Figure 5. Up to this point, the installation operation follows the usual stages in the installation of a lockbolt by a driving tool of this type. At this point in the installation operation, however, the force in reaction to the pull on the pin shank is transferred from the deformable collar 24 to the face of the adjacent plate member 26 and since the leading end face 37 of the driving tool is canted with the point of pressure against the plate member offset from the pin, the driving tool tends to fulcrum on the pressure point and thus tilt or swing away from alignment with the pin. Thus, in Figure 5, with increasing pull on the shank of the pin, the driving tool tends to fulcrum about the pressure contact point 46 and to rock towards a position with the leading end face 35 flat against the plate member 26.

As a result of this reaction tilting force, the set of jaws 38 applies a bending moment to the shank of the pin. The bending stress is concentrated or localized at the outer end of the deformed collar 24 since the deformed collar cooperates with the plate members 25 and 26 to reinforce the shank to resist bending beyond this point. This localized bending stress increases in magnitude as the tension stress of the pin increases until, as shown in Figure 6, the pin snaps off at whatever circumferential groove 30 is adjacent the outer end of the collar. It is apparent that this final breaking action occurs automatically in response to the continued axial separation of the two sections of the driving tool 33.

It may be noted that, because of the canted nose configuration of the driving tool and because this canted configuration is shared by the swaging element 36, the swaging element does not reach a portion 48 of the deformable collar 24 at the stage shown in Figure 5. The subsequent canting of the driving tool, however, tends to rock the swaging element 36 to the position shown in Figure 6 with a snap action to complete the deformation of the collar into positive engagement with the pin shank.

When the pin shank breaks off at the selected circumferential groove 30, the tool may tend to remain in engagement with the swaged collar but the jaw-actuating member 40 is immediately shifted forward to release the severed end of the pin shank and the consequent forward movement of the tubular extension 41 of the jaw-actuating member frees the tool. Thus Figure 6 shows how the tubular extension 41 moves against the deformed collar to force the swaging element 36 out of engagement with the deformed collar.

The deformable collar 24, in this first described practice of the invention, has the configuration shown in Figure 7, being formed with the previously mentioned tapered end surface 45. It is to be understood, however, that the deformable collar may be of various configurations. Figure 8, for example, shows a deformable collar 24*a* that is of the configuration of a plain cylindrical sleeve.

In a second practice of the invention illustrated by Figures 9 to 12, a conventional driving tool 33*a* is employed without modification. The canting of the tool at the end of the installation operation is accomplished by employing a deformable collar 50 of special configuration.

The conventional driving tool 33*a* has the usual barrel 34*a* with a leading end face 35*a* that is normal to the axis

[fol. 1284]

of the tool. The barrel 34*a* carries the usual symmetrical swaging element 36*a* having the usual constricting swaging surface 37. The usual set of jaws 38*a* is controlled by a jaw-actuating member 40*a* having a tubular extension 41*a*.

The deformable collar 50 has a tapered end surface 52 for initial engagement by the swaging element 36*a*. The base end of the deformable collar 50 is formed with a radial enlargement 54 which is of canted diametrical cross-sectional configuration, the enlargement providing a tapered circumferential shoulder in the path of the leading end of the swaging element 36*a*.

The first two stages of the installation operation in this second practice of the invention illustrated by Figures 9 and 10 is the same as the first two stages of the first described practice of the invention. When the swaging element 36*a* in deforming the collar 50 reaches the point shown in Figure 11, however, the canted shoulder 55 of the collar tends to cause the driving tool 33*a* to cant to the position shown in Figure 12. In this manner, the canted configuration of the deformable collar causes the driving tool to place the pin shank under bending stress at the selected annular groove 30 for severance of the pin shank. After the end of the pin breaks off, the tubular extension 41 of the jaw-actuating member pushes against the deformed collar to free the driving tool from the collar.

The third practice of the invention illustrated by the Figures 13 to 16 employs a driving tool 33*b* having the usual barrel 34*b*, the barrel having a nose or leading end face 35*b* normal to the axis of the tool. The driving tool 33*b* has the usual set of jaws 38*b* controlled by a jaw-actuating member 40*b*, the jaw-actuating member having the usual tubular extension 41*b*.

The tool 33*b* differs from the conventional driving tool in having a swaging member 56 that may be considered as comprising two constricting swaging elements. Thus, the swaging member 56 has a first or leading constricting swaging surface 58 and a second subsequently effective constricting swaging surface 60 that steps down in diameter. This driving tool is employed with a conventional deformable collar such as the previously described deformable collar 24.

Here again the first two stages of the installation operation shown in Figures 13 and 14 is the same as in the first described operation. As the driving tool approaches the stage shown in Figure 15 to complete the swaging of the collar 24, however, the second constricting swaging surface 60 constricts the outer end of the collar 24 and thus, subjects the corresponding region of the pin shank to concentrated high magnitude radial compression. With continued rise in the force of separation acting between the two sections of the driving tool, the tension of the pin shank correspondingly increases until the tension stress combined with the localized radial compression stress causes the pin shank to break at the selected circumferential groove, as shown in Figure 16. Usually, the reaction of the tool to the breaking of the pin frees the tool from the deformed collar. If not, the immediate advance of the tubular extension 41*b* of the jaw-actuating member 40*b* forces the tool free.

My description in specific detail of the selected practices of the invention will suggest various changes, substitutions and other departures from my disclosure within the spirit and scope of the appended claims.

I claim:

1. The combination of a plurality of rigid members each having an opening therethrough of a common uniform diameter, said members being adapted to be abutted with said openings aligned, each of said members being of at least a given minimum individual thickness and the combined thickness of said members being within the range of thicknesses extending from a given minimum total thickness to a given maximum total thickness, and a fastening means to extend through said aligned openings to cooperate with a deformable collar for interconnecting the members, said fastening means comprising a pin with a shank and a head on one end of the shank, said shank having a substantially uniform maximum diameter throughout and having a series of axially spaced circumferential grooves, each providing the minimum diameter of the shank and forming a series of frangible breaknecks and forming therebetween spaced ribs of said maximum diameter to seat snugly in of any said openings and to be engaged by said collar by swaging of the collar into the breaknecks, said series of breaknecks extending from the second end of the pin to at least a point spaced from said head by said given minimum total thickness so that the collar will engage a rib of the pin adjacent a plurality of the members of said given minimum total thickness as well as adjacent any plurality of said members of greater total thickness within said range, the spacing of said ribs being substantially less than said given minimum individual thickness so that when said series of breaknecks extend through any of said members at least one of the ribs will lie between the planes of the opposite faces of such members to maintain said openings of the members in alignment, said shank being of a length substantially greater than said given maximum total thickness plus the axial dimension of said collar whereby the shank may extend through a plurality of said members of said given maximum total thickness and through and beyond said collar to be engaged by tool means and whereby in securing together any plurality of said members of a total thickness within said range, the shank may be broken off at a breakneck immediately adjacent the outer end of said collar.

2. Fastening means as set forth in claim 1 in which said ribs have cylindrical peripheral surfaces.

3. Fastening means as set forth in claim 1 in which said ribs are closely spaced for at least two ribs to engage one of said members of said given minimum individual thickness.

4. Fastening means as set forth in claim 3 in which the portion of said shank between said point and said head is of uniform cylindrical configuration and is dimensioned for snug fit in said openings.

References Cited in the file of this patent

UNITED STATES PATENTS

643,045	Denis	Feb. 6, 1900
2,061,628	Huck	Nov. 24, 1936
2,355,579	Wing	Aug. 8, 1944
2,385,886	Shaff	Oct. 2, 1945
2,395,667	Keller et al.	Feb. 26, 1946
2,526,235	Huck	Oct. 17, 1950
2,531,048	Huck	Nov. 21, 1950
2,531,049	Huck	Nov. 21, 1950

B3

See pg. 20 Lns. 21 of Interf. for Annots 2, Cl. 1- Copied for Clarity

686

[fol. 1285] IN THE UNITED STATES DISTRICT COURT FOR THE EASTERN DISTRICT OF MICHIGAN

DEFENDANTS' EXHIBIT No. DD

HUCK MANUFACTURING COMPANY
Departmental Correspondence

Date: August 23, 1954.

Subject: Catalogue Sheets New Order Pricing Policy.

To: All Product Engineers.

From: Martin E. Welch, Jr.

Copies: AWA, AEB, RL, TNB, PP, WJW, JJS, BSC, MEW, File √

Attached, punched for insertion in your catalogue, is a copy of the new order pricing policy sheet for CL, 9SP, PT, HR, CKL, and OS fasteners (Form 8-336), and one copy of the new policy for AL, ALS, BL and Huckbolt Collars (Form 8-300).

Details of revised order pricing policy were outlined in Robert Looker's memorandum of August 19, 1954.

The attached new sheets are now going out in all catalogues for which the coinciding sections, on the request card, have been checked.

Very best regards, Martin E. Welch, Jr.

MEW/ab.

Messrs: Adams, Clute, Crook, DeLoach, Fleeger, Hanneman, Houston, Huegin, Martin, Mather, Miller, Morgan, Buehring, Miner, Proffitt, Ransom, Strother, Salogga, Singleton, Thomson, Thone, Turney, Tyson, Unfried, Upton, Villacres, Sarno.

[fol. 1286] HUCK MANUFACTURING COMPANY

Effective August 25, 1954.

ORDER PRICING POLICY for—

CL—Commercial Huckbolts
9SP—Self Plugging Blind Rivets
PT—Pull Through Blind Rivets
HR—Hollow Rivets
CKL—Conical Keystone Lock Blind Rivets
OS—Structural Head Type Blind Rivets

Terms:

All prices are subject to Huck Manufacturing Company's standard terms of ½ of 1% ten days—net 30 days, F. O. B. Huck Manufacturing Company, Detroit, Michigan.

Pricing:

Each ordered item will be priced as indicated by the quantity bracket in which it falls, subject to the following:

1. Grouping

a. Quantities of Huck standard fasteners (those fasteners having published prices except the sizes shown in red or italics) of various head types, materials, diameters and grip lengths may be grouped within the limitations of the basic product categories, shown in 1-b, in order to obtain the advantage of lower published price brackets provided releases are in accordance with 2-a and 2-b.

b. Standard items in each numbered basic product category listed below may be grouped only with other items in the same numbered basic product category.

1. Commercial Huckbolts

2. * Self Plugging Blind Rivets

* Pull Through Blind Rivets

---

* All head types, materials, diameters and grip lengths, except 56-S Aluminum Alloy (B) material, which may be grouped with other 56-S Aluminum Alloy Self Plugging and Pull Through items only.

HR Blind Rivets

3. Conical Keystone Lock Blind Rivets

4. Structural Head Type Blind Rivets

c. Items of the same category to be grouped may appear on more than one purchase order, Providing All Such Purchase Orders Originate From One Location, Are Cross Referenced to Indicate a Group Price Basis and are Received at our Detroit Office at the Same Time.

2. Split Shipments

a. Split shipments (partial releases) on quantities of 20,000 pieces or more of any one standard item may be scheduled over a period not to exceed one year from date of order without price penalty, provided each release is for 10,000 pieces or more and a complete release schedule covering the entire order is received with the order.

b. Items of less than 20,000 pieces each must be scheduled for one shipment only, within one year from date of order and the specified schedule must accompany the order.

Exceptions:

3. Extended Scheduling:

If ordered items are scheduled in release quantities less than those specified in 2-a and 2-b, the total quantity will be divided by the number of releases and the price applicable to the resultant quantity will apply to each shipment of the item.

4. Partial Cancellations and Rescheduled Releases

a. In cases in which conditions dictate a reduction or partial cancellation of an order, the uncancelled portion of such order or grouped orders (including quantities shipped), will be repriced in accordance with the quantity bracket applicable to such uncancelled portion.

b. If the unshipped portion of an order or grouped orders is rescheduled in such a manner as not to con-

form to the provisions of 2-a and 2-b, the entire shipped and/or unshipped order, or grouped orders, will be repriced in accordance with the new schedule.

5. Special Packaging

An additional charge will be made for packaging in containers or quantities requested by the customer which differ from Huck Manufacturing Company's standard commercial domestic packaging.

6. Quantity

Orders must be in multiples of 100 pieces, which is the minimum packaging quantity.

[fol. 1287] HUCK MANUFACTURING COMPANY

Effective August 25, 1954.

ORDER PRICING POLICY for—

AL—Aircraft Huckbolts
ALS—Aircraft Huckbolt Stumps
BL—Blind Huckbolts
LC—Huckbolt Collars

Terms:

All prices are subject to Huck Manufacturing Company's standard terms of ½ of 1% ten days—net 30 days, F. O. B. Huck Manufacturing Company, Detroit, Michigan.

Pricing:

Each ordered item will be priced as indicated by the quantity bracket in which it falls.

Quantities:

Orders must be in multiples of 100 pieces for Huckbolts, Stumps and Collars, which is the minimum packaging quantity. (This does not apply to Blind Huckbolts.)

Split Shipments:

Split shipments (partial releases) on any standard item ordered may be scheduled over a period not to exceed one year from the date of the order without price penalty, provided a complete release schedule covering the entire order is received with the order.

Special Packaging:

An additional charge will be made for packaging in containers or quantities requested by the customer which differ from Huck Manufacturing Company's standard commercial domestic packaging.

Huck Manufacturing Company, WAlnut 1-6207, 2480 Bellevue Avenue, Detroit 7, Michigan.

[fol. 1288] IN THE UNITED STATES DISTRICT COURT FOR THE EASTERN DISTRICT OF MICHIGAN

DEFENDANTS' EXHIBIT No. EE

June 9, 1958.

R. E. Casner (2)
P. E. Horst:mb

Price Policy—Lockbolt Products

1. Products Covered by any Price Published by any Producer:

A. If we do not have an established price, it is our policy to quote the same price as our competition. (Our reason for doing this has nothing to do with our license or any other agreement; it is simply the same policy we try to follow in pricing products that are equal to our competitors' in order to avoid chaotic market conditions.)

2. Products Not Covered By Any Published List:

A. If we develop the item:

Estimate selling price and quote in line with nearest comparable products.

B. If developed by our competitor:

1) Undesirable Quantities:

Use Method (2A) above *or higher.*

2) Desirable Quantities:

Get special policy from one of the following:

P. E. Horst
F. R. Dickenson
R. E. Casner (if foregoing are not available)

Under no circumstances is there to be any collaboration on prices with our competition on this product or on any other.

cc: E. B. Buster (2).

[fol. 1289] [File endorsement omitted]

IN THE UNITED STATES DISTRICT COURT FOR THE EASTERN DISTRICT OF MICHIGAN, SOUTHERN DIVISION

Civil Action No. 21,791

[Title omitted]

MOTION OF DEFENDANTS TO DISMISS THE ABOVE ENTITLED ACTION UNDER RULE 41(b) OF THE FEDERAL RULES OF CIVIL PROCEDURE, UPON THE GROUND THAT UPON THE FACTS AND THE LAW PLAINTIFF HAS SHOWN NO RIGHT TO RELIEF—Filed April 15, 1963.

Plaintiff in the above entitled action having filed herein the record of proceedings in United States v. Huck Manufacturing Company et al, Criminal Action No. 39,017 in this Court, subject to all objections appearing therein, as constituting Plaintiff's case in chief in this Civil Action on which Plaintiff rests;

The Defendants herein now move for dismissal of this action on the ground that Plaintiff having completed the presentation of its evidence has shown no right to relief upon the facts and the law.

Respectfully submitted, Huck Manufacturing Company Defendant, by Arthur W. Dickey, John C. Sterritt, Albert M. Stern Its Attorneys, Sec. AWA.

[fol. 1290] Townsend Company, Defendant, By Thomas W. Pomeroy Jr., Samuel K. McCune, W. Walter Braham Jr., Its Attorneys, per AW Dickey.

Dated April 15, 1963.

CERTIFICATE OF SERVICE (omitted in printing.)

[fol. 1291] [File endorsement omitted]

IN THE UNITED STATES DISTRICT COURT, EASTERN DISTRICT OF MICHIGAN, SOUTHERN DIVISION

No. 21791

UNITED STATES OF AMERICA, Plaintiff,

vs.

HUCK MANUFACTURING COMPANY and TOWNSEND COMPANY, Defendants.

Transcript of Proceedings—April 22, 1963.

Motion of defendants to dismiss under Rule 41(b) of the Federal Rules of Civil Procedure.

Before the Honorable Thaddeus M. Machrowicz, District Judge. At Detroit, Michigan.

* * * * * * *

[fol. 1292] 1:30 o'clock p.m.

Clerk of the Court: Number 21791, United States of America versus Huck Manufacturing Company and Townsend Company.

The Court: Are all parties ready?

Mr. Dickey: Counsel for the Townsend Company, the other defendant, has not come in yet. We represent the Huck Manufacturing Company.

I think he will be here any minute.

The Court: All right take this off the record.

(An off-the-record discussion was thereupon had.)

(Counsel for the defendant Townsend Company appeared in court during the off-the-record discussion.)

The Court: All right, gentlemen, you may proceed. I think we are now proceeding on a Motion for a Directed Verdict, is that correct?

PRESENTATION BY MR. DICKEY

Mr. Dickey: It is a Motion for Dismissal under Rule 41(b).

The Court: Motion for Dismissal?

Mr. Dickey: Yes.

We are in a situation where the Government has filed in this court a transcript of the proceedings in a [fol. 1293] companion criminal action.

The Court: Is there a stipulation filed that the proceedings may be received, and that that constitutes the Government's case?

Mr. Dickey: The Government's case, and that the defendants were given permission to move to dismiss.

The Court: Yes. Very well.

Mr. Dickey: As the Court no doubt knows, in the criminal action, at the close of the Government's case, and that is presently the record in this case, the defendants moved for a judgment of acquittal and that motion was granted on the ground that the Government had not by its evidence established the Sherman Act violations that were alleged.

The Court: In order to facilitate the argument of counsel, I might say that the Court has read the transcript and has gone over the briefs of all the parties concerned, with the exception of the material that has been furnished the Court this morning.

* * * * * * *

[fol. 1294] The Court: Will you point to me the variations you consider are applicable between this and the General Electric case.

PRESENTATION BY MR. LIPSON

Mr. Lipson: Gladly, your Honor.

The General Electric case insofar as it delves with this area we are now considering, came up on stipulation, on a stipulated record, and it dealt with a license granted by General Electric Company to the Westinghouse Company by which General Electric was permitted to fix the price that Westinghouse would sell these electric light bulbs that [fol. 1295] were patented.

That was all. That was all of the fact in that case. There was nothing more.

But our case goes far beyond that because the agreement that we are talking about is not one where the patentee imposes his decision on price to the licensee which was permitted by the Court in General Electric, but here the licenseee is restraining the patentee because the licensee is participating in the price determination.

The licensee in this case is limiting, by the nature of the agreement, is limiting the ability of the patentee to license whomsoever the patentee desires. These things were not present in the General Electric case.

The General Electric case illustrates in the opinion that there were numerous other licensees from General Electric, but the very nature of the restraint in this case prevents the patentee from licensing others. It keeps others out of the business.

The purpose, the salutary purpose, of permitting this limited area of price fixing in the General Electric case as I understand the reasoning of the Supreme Court, was to encourage the licensee to license others. If the licensee lives in fear—pardon me—if the patentee lives in fear that the licensee might underprice him, conceivably a patentee would be unwilling to offer these licenses and the result [fol. 1296] would be that there would be a limitation on the number of firms manufacturing the particular item.

But here, the very nature of the restraint by which Huck, the patentee, is prevented from licensing others surely goes against the very reason for the existence of this permissive area of price fixing in General Electric.

At any rate, General Electric was severely limited on its facts, it did not sanction collusive or collective arrangements between a patentee and his licensee, and I think that the subsequent cases have borne this out. The language of this Court in the Besser case, which was affirmed by the Supreme Court that collective arrangements by which licenses are limited, must fall.

The same thing is repeated by a case defendants have cited and relied on by Judge Rodney in the Cauk case in the District Court in Delaware in 1964. I will treat that case at greater length in awhile, your Honor.

Since the General Electric case cannot be held to apply to

the pervasive kind of an agreement that was entered between these two companies, the price fixing scheme stands in connection with the other parts of the arrangement on no better footing than any other kind of price fixing arrangement.

That is to say, your Honor, it is unlawful per [fol. 1297] se.

* * * * * * *

[fol. 1298] The very character of the per se violation, the ruling by the Supreme Court in the New Wrinkle case establish that in this case, in this contest, there is no need to inquire. Indeed, it is completely irrelevant to inquire into the reasonableness or alleged economic justification or economic surroundings of the agreements here contained.

* * * * * * *

[fol. 1299] The White Motors case on which defendants place some reliance is, we think inappropriate. The matter that came up in the White Motor case involved a kind of arrangement between a manufacturer and his distributors by which these distributors in the vertical distribution line of the truck business were prevented from selling White trucks in certain geographical areas and to certain customers.

The case was treated by the Supreme Court as one of first impression. The Government through the Solicitor General, argued that the Supreme Court should rule that [fol. 1300] that kind of arrangement was unlawful per se.

The Supreme Court was unwilling to make that kind of a determination based on the record then before the Supreme Court and that record was quite a limited one. It was a summary judgment case and the Court sent the case back for further evidence before it would make any determination on whether or not the kind of action involved in the White Motors case was per se unlawful but unlike White Motors the kind of restraint involved here, that is, efforts to exclude others, efforts to price fix beyond a scope of the General Electric case are and have been declared unlawful already by the Supreme Court and, therefore, there is no cause for any further investigation of the economic effects.

[fol. 1301] [File endorsement omitted]

IN THE UNITED STATES DISTRICT COURT, EASTERN DISTRICT OF MICHIGAN, SOUTHERN DIVISION

Civil Action No. 21791

UNITED STATES OF AMERICA, Plaintiff,

vs.

HUCK MANUFACTURING COMPANY AND TOWNSEND COMPANY, Defendants

FINDINGS OF FACT AND CONCLUSIONS OF LAW UPON DISMISSAL UNDER RULE 41 (b) OF THE FEDERAL RULES OF CIVIL PROCEDURE—February 27, 1964.

Status of Case

This is a civil action upon complaint of United States of America against the defendants under 15 USC 4 to prevent and restrain alleged combination and conspiracy by defendants in violation of the Sherman Act, 15 USC 1 and 2.

Jurisdiction of the subject matter hereof and proper venue of the parties hereto duly appear and are conceded by the parties.

On the date of filing the Complaint herein, October 24, 1961, plaintiff also instituted criminal action No. 39017 in this Court on indictment of the defendants for the same alleged violations of the Sherman Act that are alleged in this civil action.

The criminal action was tried before the Honorable Fred W. Kaess, U.S. District Judge in this Court, and a jury, February 26, 1963 through March 12, 1963. At the close of the Government's case on March 13, 1963, the defendants moved the Court for judgments of acquittal, which were granted, on the ground that the Government had not by its evidence established the Sherman Act violations alleged [fol. 1302] in the indictment. The opinion and order contained the following paragraph, summarizing the reason for the granting of the motion for judgment of acquittal.

"To conclude, it has not been shown that the object of defendants' patent arrangement was to secure a greater reward than that attributable to the superiority of the products, or to achieve monopoly power."

Thereafter by stipulation of the parties herein, the record of proceedings in the said criminal action, No. 39017, was introduced in evidence in this civil action subject to all the objections appearing therein, as constituting the Government's case in chief in this action, on which the Government rests; it being further stipulated that the defendants in this action may move for dismissal of this action on that record, pursuant to the Federal Rules of Civil Procedure. The applicable rule is Rule 41 (b), providing that:

"After the plaintiff, in an action tried by the Court without a jury has completed the presentation of his evidence the defendant, without waiving his right to offer evidence in the event the motion is not granted, may move for a dismissal on the ground that upon the facts and the law the plaintiff has shown no right to relief. The Court as trier of the facts may then determine them and render judgment against the plaintiff or may decline to render any judgment until the close of all the evidence. If the Court renders judgment on the merits against the plaintiff, the Court shall make findings as provided in Rule 52 (a)."

The Pleadings

The complaint in this case (Par. 14) alleges that:

"Beginning at least as early as 1954, the exact date being to the plaintiff unknown, and continuing thereafter up to and including the date of the filing of this complaint, the defendants have engaged in a combination and conspiracy in unreasonable restraint of trade and to monopolize the aforesaid interstate trade and commerce in lockbolts in violation of Sections 1 and 2 of the Sherman Act. The unlawful combination and conspiracy is continuing and will continue unless the relief hereinafter prayed for is granted."

[fol. 1303] The Complaint further alleges (Par. 15):

> "The aforesaid combination and conspiracy has consisted of a continuing agreement, understanding and concert of action among the defendants, the substantial terms of which have been and are:
>
> "(a) to fix and maintain prices, terms and conditions for the sale of lockbolts manufactured in the United States by defendants who are the only producers of a general line of lockbolts;
>
> "(b) To limit the number of licensees permitted to manufacture lockbolts;
>
> "(c) To require the consent of the only general licensee before the patent owner is allowed to license any other firm for the production of its general line of lockbolts;
>
> "(d) To have the defendants who are the two dominant manufacturers of lockbolts cross license each other on all improvements of and substitutes for lockbolts which might in the future be developed by either defendant."

The complaint (Par. 5) defines "lockbolt" to mean a two-part metal fastening device used to permanently join together two or more pieces of metal in the manner illustrated by Appendices "A" and "B" attached to the Complaint.

The Complaint further alleges (Par. 6) that lockbolts are patented devices, are produced in various shapes and sizes depending on the use for which they are intended, and are constructed of a number of different metals including alloy steels, aluminum and titanium.

The Complaint (Par. 7-10) states that the majority of all lockbolts are designed for use in the airframe manufacturing industry, and are used to hold together the wings and body of aircraft; also in manufacture of truck trailers, house trailers, railroad cars and ships, United States naval vessels, and other industrial applications where formerly a nut and bolt or rivet or other fastener would have been used. That a lockbolt is superior to the ordinary rivet in that the lockbolt pin can be made of metal strong enough to withstand sheering action; that unlike the rivet the lock-

bolt pulls together the pieces of metal being joined and eliminates sheet-gap; that unlike a nut and bolt a lockbolt [fol. 1304] cannot be loosened by vibration or passage of time. That other devices also used to join pieces of metal have not the peculiar advantages of lockbolts; that in the aircraft manufacturing industry, once the lockbolt has been specified by the manufacturer's engineering staff, other devices cannot thereafter readily be substituted.

The Complaint further states (Par. 11) that lockbolts are manufactured and sold by defendant, Huck Manufacturing Company, under patents assigned to it. That Huck Manufacturing Company has licensed defendant Townsend Company to manufacture and sell a general line of lockbolts and has also licensed two other firms to manufacure and sell lockbolts of titanium only.

The Complaint (Par. 13) further states that lockbolts sold in the United States in recent years were valued at approximately Sixteen Million Dollars, ($16,000,00000) annually.

Defendants, answering the Complaint, deny that they have or are engaged in a combination and conspiracy in unreasonable restraint of trade and to monopolize interstate trade and commerce in lockbolts in violation of Sections 1 and 2 of the Sherman Act, deny that the alleged unlawful combination and conspiracy is continuing and will continue, and deny paragraphs 15, 16 and 17 of the Complaint, alleging respectively a continuing agreement, understanding and concerted action among defendants constituting the alleged unlawful combination and conspiracy; and deny that in formulating and effectuating the alleged unlawful combination and conspiracy they have entered into the various agreements and done various things and performed the various acts alleged in paragraph 16 of the Complaint, and deny the effects of the alleged unlawful combination and conspiracy alleged in paragraph 17 of the Complaint, and deny that plaintiffs are entitled to relief demanded by the Complaint.

[fol. 1305] Defendants, by answer, admit that lockbolts are patented devices, that they are manufactured and sold by defendant Huck Manufacturing Company under patents assigned to it, and that Huck Manufacturing Company has licensed defendant Townsend Company under such pat-

ents; that the major portion of lockbolts produced by defendants are designed to meet the standards of the airplane industry and that the same are used in the construction of aircraft; aver that lockbolts are a small proportion of fastening devices used in the construction of aircraft; admit that lockbolts are used in the manufacture and repair of truck trailers, house trailers, railroad cars and ships, including United States naval vessels, and other industrial applications; and aver that many types of fasteners other than lockbolts are likewise used; aver that lockbolts have some advantages over other devices used to join individual pieces of metal, and that other devices used to join individual pieces of metal have some advantages that lockbolts do not have; aver that the aircraft manufacturers have a choice of fastening devices to be used to fasten together the parts of any airplane under design and admit that whatever fastening devices are chosen, other fastening devices cannot thereafter be readily substituted, and aver that this holds true whether a lockbolt is to be substituted for another fastening device originally selected or whether another fastening device is to be substituted for the lockbolt originally selected.

The contention of the Government that emerges from pleadings, evidence and arguments and briefs in this case is that violations of Sections 1 and 2 of the Sherman Act have occurred by reason of alleged combination and conspiracy by and between defendants in unreasonable restraint of trade and to monopolize interstate trade and commerce in lockbolts conceded to be subject of and covered by valid and subsisting United States patents owned by defendant Huck Manufacturing Company, by reason of alleged illegality of license agreement between Huck and Townsend, in the respect that there was an understanding [fol. 1306] between defendants that Huck would not license any third parties under its lockbolt patents, except for special kinds of lockbolts subject to those patents that neither Huck nor Townsend were interested in manufacturing, in return for Townsend's agreement to follow Huck's prices, terms and conditions of sale for the patented lockbolts, for so long as Huck did not license any third parties to manufacture and sell Huck's patented lockbolts; that Huck thereby illegally restrained itself from granting

licenses to others to manufacture and sell under its lockbolt patents; and that the prices, terms and conditions of sale for the patented lockbolts were illegally fixed by the parties.

The defendants contend that the licensing arrangements between themselves are valid and legal and that their operations under the license agreement do not exceed the bounds of that conduct permitted to a patentee and licensee under valid patents as set forth in *United States* v. *General Electric Co.*, 272 U.S. 476 (1926), *Ethyl Gasoline Corp.* v. *U.S.*, 309 U.S., 436, 456; *United States* v. *E. I. duPont DeNemours & Co.*, 118 F. Supp. 41, 224, D.C.Del.; *Transparent-Wrap Machine Corporation* v. *Stokes & Smith Company*, 329 U.S. 637, 645-648; *Binks Manufacturing Co.* v. *Ransburg Electro-Coating Corp.*, 281 F. 2d 252, 259 (C.A. 7).

No jury having been demanded by any of the parties in the cause, and the defendants having duly moved under Rule 41(b) for dismissal of the action on the ground that upon the facts and the law the plaintiff has shown no right to relief, and the Court as trier of the facts having duly heard the said motion in open court, upon the evidence presented by the plaintiff and having duly considered the evidence, the arguments of counsel for the respective parties in open court with respect thereto, and the briefs presented and filed by the respective parties with respect [fol. 1307] thereto, has determined the facts and now renders judgment against the plaintiff, and hereby makes its findings of fact and its conclusions of law thereon and directs entry of the appropriate judgment thereon as provided in Rule 52 (a).

Findings of Fact

1. Huck Manufacturing Company (hereinafter referred to as "Huck") is a corporation organized and existing under the laws of the State of Michigan, with general offices and principal place of business at 2500 Bellevue Avenue, Detroit, Michigan. Huck transacts business within the Eastern District of Michigan, Southern Division.

2. Townsend Company was at the beginning of this suit a corporation organized and existing under the laws of the Commonwealth of Pennsylvania. It is now a Division of Textron Industries, Inc., a corporation organized

and existing under the laws of the State of Delaware. The Townsend Company Division has general offices and its principal place of business in Beaver Falls, Pennsylvania. (Wherever hereinafter used, the name "Townsend" refers to Townsend Company, whatever its corporate organization at that time.) Townsend transacts business within the Eastern District of Michigan, Southern Division.

3. Huck manufactures the lockbolts in Detroit, Michigan, and sells the same throughout the State of Michigan and throughout the United States. (Complaint, Par. 3; R.142)

4. Townsend manufactures the lockbolts in plants in Santa Ana, California, and Ellwood City, Pennsylvania. Townsend sells the same throughout the State of Michigan and throughout the United States. (Complaint, Par. 3)

5. The "lockbolt" is a two-part metal fastening device used to join together permanently two or more pieces of [fol. 1308] metal. The two parts are a "lockbolt pin" and a "lockbolt collar". The "lockbolt pin" is a metal pin having an enlarged head which abuts against one of the members being joined, a grooved portion about which the lockbolt collar is swaged and a grooved pintail which is gripped, pulled and broken off as the collar is swaged. The "lockbolt collar" is a cylindrical piece of metal designed to slip over the lockbolt pin and be swaged into its grooves. (Complaint, Par. 5, Appendices "A" and "B" attached to the Complaint; Townsend Answer, Par. 5; Huck Answer, Par. 5; R. 147-152)

6. Lockbolts are patented devices used to fasten together two or more pieces of metal. They are produced in various shapes and sizes depending on the use for which they are intended, and are constructed of a number of different metals including alloy steels, aluminum and titanium. (Complaint, Par. 6)

7. Lockbolts are used in the airframe manufacturing industry in the production of military and civilian jet and propeller-driven aircraft, in the manufacture and repair of truck trailers, house trailer, railroad cars and ships, including United States naval vessels, and in other industrial applications. The major portion of lockbolts manufactured by both defendants are used in the airframe manufacturing industry. (Townsend Answer, Par. 7; Huck Answer, Par. 7; R. 172)

8. Total sales of lockbolts in the United States by Huck and Townsend in the year 1960 amounted to Five Million Nine Hundred Seventy-seven Thousand Five Hundred Ninety-three and 96/100 Dollars, ($5,977,593.96). Exhibits 80 and 103)

9. Several types of fasteners other than lockbolts are used and usable for the same purposes as lockbolts. (R. 822-24)

10. The lockbolt was invented by Louis Huck, President and then principal stockholder of Huck Manufacturing [fol. 1309] Company. Huck Manufacturing Company is the owner of United States Patents No. 2,531,048 and 2,531,049 dated November 21, 1950, covering the lockbolts. These patents are conceded to be valid, subsisting and enforceable. (Pre-Trial Order covering Pre-Trial conference of October 1, 1962)

11. The lockbolts are and since 1950 have been manufactured and sold by Huck under the above-described lockbolt patents.

12. In 1951, after defendant Huck had entered upon the manufacture and sale of its patented lockbolts, defendant Townsend copied those lockbolts and entered into the manufacture and sale thereof in competition with Huck by infringing Huck's lockbolt patents; that Huck, then refusing to grant Townsend a license under its lockbolt patents, sued Townsend for infringement thereof, obtained in 1952-1953 a decision and judgment against Townsend, holding the patents to be valid and infringed by Townsend; that Townsend then again sought license under the patents and took an appeal from the judgment against it, and ceased the manufacture and sale of the lockbolts; that during the pendency of the appeal Huck, confronted by demand of its customers for a second source of supply for said lockbolts and encountering delay in meeting delivery dates specified by its customers (R. 194, 197), reconsidered the advisability of granting Townsend's continued request for a license, and finally after negotiations with Townsend in the summer of 1954 did grant Townsend a written license under Huck lockbolt patents, dated September 14, 1954, which is Government Exhibit GX 17; and that after the grant of the license GX 17 Townsend's appeal from the judgment against it was dismissed, and the patent in-

fringement suit pending between the parties thereby terminated.

[fol. 1310] 13. In the negotations between the parties in the summer of 1954, Huck took the position that it wanted to issue no more licenses under lockbolt patents than it believed would adequately supply the demand for the patented lockbolts and alleviate the difficulties it faced, namely, the demand of customers for a second source of supply, and delay in meeting delivery dates specified by the customers (Exhibits GX 74; 104). Townsend wanted to obtain an exclusive license under the lockbolt patents except for retention by Huck of its own right under the patents to manufacture and sell the lockbolts, and thereby obtain for Townsend as much as it could of the business of manufacturing and selling the patented lockbolts. (R. 211-213, 875-877).

14. The written license GX 17 includes the Huck lockbolt patents Nos. 2,531,048 and 2,531,049 granted November 21, 1950, expiring November 21, 1967, which were held valid and infringed by Townsend in the patent infringment suit between Huck and Townsend, grants Townsend nonexclusive license to manufacture and sell lockbolts, improvements thereon and substitutes therefor of the same type covered by the licensed patents (Par. 1) for which Townsend agrees to pay Huck a royalty of five percent (5%) of the net selling price of the lockbolts manufactured and sold by Townsend and covered by the licensed patents (Par. 2), provides that Townsend grants Huck a nonexclusive royalty-free license with right to sublicense improvements on the lockbolts made or acquired by Townsend during the life of the license (Par. 8); provides that Townsend shall use its best efforts to manufacture and sell lockbolts up to at least 7/16" pin diameter (Par. 9); provides that for lockbolts sold by Townsend as Huck equals with pin diameter up to 3/8" Townsend shall maintain Huck's quality for full equivalence in shear tension and fatigue (Par. 10); provides that Townsend will identify the lockbolts manu-
[fol. 1311] factured and sold by it to distinguish them from the lockbolts manufactured and sold by Huck (Par. 11); that Huck will furnish Townsend drawings and specifications it has for the lockbolts and know-how it has for the production of the lockbolts, and that Townsend will furnish Huck with

know-how it may develop for the production of the lockbolts (Par. 17); provides that as Townsend will be required to expend considerable money to provide facilities for entering the manufacture and sale of lockbolts (Par. 12), that for the first two years the license shall be exclusive to Huck and Townsend except in case of national emergency (Par. 12a), and that Townsend during the two-year exclusive period shall maintain at least Huck's prices on lockbolts manufactured and sold by Huck according to Huck's published current price schedule as changed from time to time and computed according to Huck's published Standard Pricing Policy, and prescribed freight charge computation (Par. 12b); provides that Townsend may cancel the agreement at any time on six months' notice in writing to Huck (Par. 13); and (Par. 16) that unless previously terminated (by Huck in the event of Townsend's failure to pay royalties or breach of any material provision of the agreement (Par. 6); or by cancellation by Townsend (Par. 13), the agreement and license shall extend for the full term of the United States Letters Patent which are or may be included in the agreement.

15. The Government adduced testimony from its principal witness Looker, a former employee and officer of Huck Manufacturing Company, to the effect that there was a verbal agreement between defendants Huck and Townsend, supplemental to the written patent license agreement GX 17 of September 14, 1954, that was in substance that Huck would continue the lockbolt patent license GX 17 exclusive to Townsend, and not grant licenses under the lockbolt [fol. 1312] patents to others so long as Townsend, for the patented lockbolts it manufactured and sold, maintained Huck's established prices on the lockbolts which Huck manufactured and sold.

It is the testimony of Looker that this alleged verbal agreement was made between Armour, President of Huck, and Dickenson, President of Townsend, at a meting which occurred in the summer of 1954, during negotiations for and prior to the time the written lockbolt patent license GX 17 of September 14, 1954 was completed and signed by the parties.

Looker, after graduating from the Naval Academy and a short ferm of active service in the Navy, left the service in

September, 1947, and became employed by defendant Huck Manufacturing Company under his stepfather Louis C. Huck, who was at that time President of Huck Manufacturing Company, first serving as a clerk in the sales office, then as manager of technical publications until 1952, then as Sales Manager until May, 1954, then as Vice President in Charge of Sales until August, 1956, when he voluntarily resigned upon acquiring an interest in the Brown-Line Corporation of El Segundo, California, in association with Milton A. Miner, then West Coast Sales Representative of Huck Manufacturing Company. Looker assumed presidency of the Brown-Line Corporation which was engaged in the manufacture of devices for holding down cargo, seats, etc., in airplanes. Looker, upon leaving Huck Manufacturing Company, endeavored to obtain a license for the Brown-Line Corporation from Huck Manufacturing Company under the Huck lockbolt patents. Huck Manufacturing Company refused to grant the license, but Looker continued his endeavors to obtain such license. These efforts being unsuccessful, he initiated in the Department of Justice and pressed and followed up the action of the Department which culminated in the criminal action No. 39017 and this present [fol. 1313] civil action. Prior to the trial of the criminal action, Looker caused the institution of suit in the United States District Court for the Southern District of California by Brown-Line Corporation against the defendants Huck Manufacturing Company and Townsend Company under 15 USC 15 for treble damages on account of alleged violation of the Sheman Act.

Subsequent to the grant of the lockbolt patent license by Huck Manufacturing Company to Townsend Company, GX 17 dated September 14, 1954, and prior to his resignation from Huck in 1956, Looker, inconsistent with his present contention that Huck was prohibited from granting licenses under its lockbolt patents to others than Townsend by the alleged verbal agreement with Townsend, recognized (R. 566) that Huck Manufacturing Company was free to grant such licenses. He issued memoranda (Ex. DXY; GX 59) while employed by Huck during the period subsequent to the granting of the license GX 17 on September 14, 1954, contemplating the grant of such licenses, and also immediately upon leaving the employ of Huck and assuming the

presidency of Brown-Line Corporation in 1956 sought such license from Huck for Brown-Line Corporation.

16. The verbal agreement or understanding which the Government contends was entered into by the parties as part of the written license agreement GX 17, completed and signed by the parties as of September 14, 1954, was in purport and effect to make or continue the lockbolt patent license exclusive to Townsend, except for retention by Huck of its own right under the patents to make and sell the patented lockbolts, for so long as Townsend maintained for the lockbolts which it manufactured and sold under the license, the prices, terms and conditions of sale Huck established for the lockbolts which Huck manufactured and sold under the title and rights it retained under the same patents. The verbal agreement was no more than the [fol. 1314] exercise by Huck of its right as the patent owner of the lockbolt patents to grant or extend an exclusive license to another (in this case, Townsend) for the unexpired term of those patents and to require as a condition thereof that its licensee sell the patented lockbolts, which it could legally manufacture only under license, upon the terms and conditions of sale and prices established by Huck, and the exercise by Townsend of its right to agree to and accept such a patent license.

17. Huck, as owner of the patents and licensor, kept its customers and Townsend, its licensee under the patents, informed by published price lists of the prices, terms and conditions of sale of the patented lockbolts which Huck established and followed in the sale of lockbolts manufactured by it.

18. Townsend manufactured and sold the patented lockbolts under the license GX 17 and, except for occasional deviations, observed and followed substantially the same prices, terms and conditions of sale established and observed by Huck for the sale of the patented lockbolts which Huck manufactured.

19. There is no evidence in this case that the licensee Townsend was granted, or had, or exercised any power or authority to fix prices under Huck's lockbolt patents for Huck, the patent owner, or any other licensee under the Huck lockbolt patents to follow.

20. There have been various contacts between Huck, the

patent owner, and Townsend, its licensee, since the patent license agreement GX 17 was entered into. These contracts, as disclosed by the testimony and documentary exhibits, have been in pursuance of the provisions of the patent license agreement GX 17 that the patented lockbolts produced by the two companies be interchangeable, that required quality be maintained, and that standards respecting sizes, finishes and lubricants applied in the manufacture of the patented lockbolts be followed. Such contacts have also been by way of interchanging information to make available technical developments and improvements in the [fol. 1315] patented lockbolts, and in installation tools and equipment, and respecting joint advertising, all attributable to the purpose of encouraging and increasing the use of the patented lockbolts in the trade. The Court finds that these contracts have been in furtherance of legitimate, normal business motives permissible under the patent license, on the part of both Huck and Townsend, and have not been for the purpose of fixing prices or to enable Townsend to fix or dictate the prices charged for the patented lockbolts.

21. Huck lockbolt patents, under which Huck granted the license GX 17 to Townsend, are conceded to be valid and subsisting and to cover lockbolts which Townsend has manufactured and sold and is presently manufacturing and selling under the license GX 17.

22. Huck has granted no licenses to others than Townsend under its lockbolt patents, except for a nonexclusive license to Pheoll Manufacturing Co. dated September 26, 1956 (Government Exhibit GX 76), and a non-exclusive license to Standard Pressed Steel Co. dated October 4, 1956 (Government Exhibit GX 77), both of which were limited to the making and selling of lockbolts made of titanium which Huck and Townsend do not make, and neither of which require price maintenance.

Others than Townsend requested licenses under Huck's lockbolt patents, which Huck refused to grant. They are Brown-Line Corporation, Olympic Screw & Rivet Corporation, Illinois Tool Works; Pheoll Manufacturing Co., and Republic Steel Corporation.

These refusals by Huck Manufacturing Company are not shown to have been participated in by or known to defendant Townsend Company, or to have occurred otherwise than

by Huck, in the exercise of its own judgment and right to select or reject prospective licensees and to prefer one over [fol. 1316] others for considerations within its discretion.

There is no evidence that Huck and Townsend could not adequately handle all available trade and commerce in the patented lockbolts.

23. On November 1, 1955 Huck granted a separate license to Townsend (Government Exhibit GX 19) in which Huck grants Townsend a nonexclusive license to make and sell lockbolt stumps and lockbolt collars, and Townsend grants back to Huck a nonexclusive license under improvements thereon which Townsend may make or acquire. There are no price maintenance requirements in this license. The stumps were not licensed under the license GX 17 of September 14, 1954.

On October 22, 1958 an agreement (Government Exhibit GX 70) was entered into between Huck and Townsend in which Huck and Townsend exchange options to obtain nonexclusive licenses from each other to manufacture and sell under each other's patents tools for installing or setting, and for removal of lockbolt devices. Only nonexclusive licenses are obtainable by Townsend from Huck or by Huck from Townsend under this agreement. There are no price maintenance requirements in this agreement.

On October 22, 1958 Huck and Townsend entered into an agreement (Government Exhibit GX 71) in which provision was made for Townsend to purchase from Huck tools and equipment made by Huck for the installation and setting, or for the removal, of lockbolt devices; and for Huck to purchase from Townsend tools and equipment made by Townsend for the installation or setting, and for the removal, of lockbolt devices. There is nothing in this agreement which restricts or prevents Huck from selling its tools to anyone it chooses, and nothing in the agreement that prevents Townsend from selling its tools to anyone it chooses. There are no price maintenance requirements in this agreement.

[fol. 1317] On June 25, 1958 Huck entered into an agreement (Government Exhibit GX 72) granting to Townsend a nonexclusive license to manufacture and sell blind lockbolts, illustrated in the drawing Exhibit A attached to the agreement, according to Huck's know-how, specifications and

engineering information, and Townsend grants back to Huck a nonexclusive license under improvements thereon which Townsend may make or acquire. This license contains no price maintenance requirements.

24. The so-called cross- or grant-back licenses from Townsend to Huck respecting Townsend's improvements do not in any way restrict or restrain Townsend's use, manufacture or sale of its own improvements, or Townsend's right to grant licenses to others under those improvements. They merely grant Huck the nonexclusive right or permission to make and sell such improvements in common with Townsend or any one else Townsend may choose to license to make and sell such improvements. These grant-back clauses provide Huck with no power whatever to restrain or monopolize trade in Townsend's improvements. There is no evidence that they are used or have ever been used or are likely to be used to restrain or monopolize trade in Townsend's improvements.

There is no evidence that Townsend possesses or has in prospect any improvements or patents thereon which are or would be subject to the grant-back clauses. The grant-back clauses themselves are nonexclusive and provide no power for restraint or monopolization of Townsend improvements. They are, on the contrary, adverse to restraint or monopoly.

In GX 17, the lockbolt patent license of September 14, 1954, the grant-back complained of is Par. 8 of that agreement, which states:

> [fol. 1318] "Townsend hereby grants to Huck a nonexclusive, royalty-free license, with the right to sublicense upon any improvements on said lockbolt devices made or acquired by Townsend during the life of this agreement coming within the claims of the licensed patent, or lockbolt devices of the same type which are substitutes of the lockbolts licensed herein by Huck."

This is merely a grant-back to Huck of a nonexclusive license with right to sublicense on Townsend's improvements. Being nonexclusive, it grants Huck no monopoly upon Townsend's improvements and no power to preclude Townsend or anyone else from making, selling and using those improvements. If the improvement happened to be

one that was covered by Huck's own patents, then the only rights Huck would have with respect to it *would arise under its own patents* and not in any way under the nonexclusive grant-back provision of Par. 8. Consequently, the grant-back provision of Par. 8 grants no power to Huck over Townsend's patents on such improvements if any, and provides Huck with no power to prevent Townsend from making, selling or using those improvements or from licensing any others it chooses to do the same. Par. 12a, making the license granted by Huck to Townsend exclusive for the first two years, does not affect Par. 8, the grant-back by Townsend to Huck of a nonexclusive license on Townsend's improvements, for Par. 12a makes exclusive only the license which Huck grants to Townsend under Huck's own patents.

In GX 19, the separate license on stumps which are not included in or subject to GX 17, the grant-back provision is Par. 11, which states:

> "Townsend hereby grants to Huck a non-exclusive, royalty-free license, with right to sub-license on any improvements on said licensed products made or acquired by Townsend during the life of this agreement, coming within the claims of the licensed patent, or products of the same type which are substitutes for the licensed products licensed herein by Huck."

This grant-back provision is entirely nonexclusive, grants [fol. 1319] Huck no monopoly power whatever over Townsend's improvements nor any right to prevent the manufacture, sale or use thereof by Townsend or any others whom Townsend chooses and is free to license.

In GX 70, the tool license option agreement, the grant-back provision by Townsend to Huck is Par. 7, which states:

> "The right and license granted to Huck by Townsend under paragraph 3 above with respect to the elected license products identified by Huck under paragraph 5 above shall include a nonexclusive right to license under any United States Letters Patent and applications for Letters Patent now owned or later acquired by Townsend with respect to said elected licensed products."

This is an entirely nonexclusive grant-back; it does not provide Huck with any monopoly or monopoly power over Townsend's improvements, nor any power to prevent the manufacture, sale or use of those improvements by Townsend or any others Townsend chooses and is free to license.

In GX 71, the sales agreement respecting tools, the grant-back provision is Par. 2, which reads as follows:

> "Townsend hereby grants to Huck a non-exclusive right, during the term of this agreement, to sell the beforementioned and described products manufactured by or for Townsend, together with any parts of or replacement for said articles. Townsend agrees that it will make the aforesaid products available to Huck in common with other purchasers."

This grant-back is nonexclusive and only of a right to purchase and sell Townsend's tools in common with others. It gives Huck no monopoly power whatever over Townsend's tools, nor any power whatever to restrain or prevent Townsend's manufacture, use or sale of its tools or license any others to do. They are made available to Huck only in common with other purchasers.

In GX 72, the nonexclusive license from Huck to Townsend on blind lockbolts, the grant-back provision is Par. 11, as follows:

> "Townsend hereby grants to Huck a non-exclusive, royalty-free license, with the right to sublicense on any improvements on said licensed products made or [fol. 1320] acquired by Townsend during the life of this agreement or products of the same type which are substitutes for the licensed products licensed herein by Huck."

This grants back to Huck only a nonexclusive license respecting Townsend's improvements. It grants Huck no monopoly power whatever over Townsend's improvements and no power whatever to restrain or prevent Townsend from making, selling or using Townsend improvements, or any others Townsend chooses and is free to license.

There is no agreement that prevents or restrains

Townsend in any way from making, using or selling Townsend improvements on the lockbolts or licensing others to do the same.

There is no agreement that prevents or restrains Townsend in any way from developing and making and selling lockbolts that would be independent of and avoid Huck's lockbolt patents.

None of the separate licenses and agreements, GX 19, GX 70, GX 71 and GX 72, have any price fixing provisions or agreements whatever.

25. There is no evidence which indicates that the patent arrangement of Huck with Townsend was designed to or did secure to Huck other than a reasonable reward for the use of exclusive patent rights of which Huck was the owner by the grant to it of the lockbolt patents.

26. There is no evidence that the purchasers and users of the patented lockbolts buy or use them for any reasons other than to utilize the advantages peculiar to them, or that they are prevented or restrained from obtaining other fastening devices for like uses available and obtainable in the market at comparable prices.

27. There is evidence that there are fastening devices other than the patented lockbolts which can be and are used for the same purposes and which are regarded as competitive with the patented lockbolts (R. 822-824), but there is no *[fol. 1321]* evidence in the record to define the industry or market in which the patented lockbolts and other fastening devices available for the same purposes and uses are being sold, or to show its magnitude.

28. There is no evidence from which the impact or effect of the combination and conspiracy alleged with respect to the patented lockbolts upon the market for the patented lockbolts and the other fastening devices used and usable for the same purposes can be evaluated or determined.

29. There is no evidence that Huck and Townsend had any intention to or did conspire to restrain or monopolize, or did restrain or monopolize, trade or commerce in lockbolts beyond the limits of the lawful patent monopoly granted to Huck as owner of the lockbolt patents.

Conclusions of Law

I. The Government concedes that under the authority of the decision in *U.S.* v. *General Electric Co.*, 272 U.S.476, the patent owner who manufactures and sells the patented articles can license another to make and sell the patented articles and require the licensee, with respect to the patented devices made and sold by the licensee under the licensor's patents, to observe and follow the licensor's prices, terms and conditions of sale.

This decision holds and establishes that it is not a violation of the Sherman Act for a patentee to grant a license to make, use and vend articles under the specifications of his patent for any royalty or upon any condition the performance of which is reasonably within the reward which the patentee by the grant of the patent is entitled to secure; that if the patentee licenses the manufacture and selling of the articles he may limit the selling by limiting the method of sale and price, provided the conditions of sale are normally and reasonably adapted to secure pecuniary reward for the patentee's monopoly; that one of the valuable elements of the exclusive right of the patentee is to acquire profit by [fol. 1322] the price at which the article is sold, the higher the price the greater the profit; that when the patentee licenses another to make and vend and retains the right to continue to make and vend on his own account, the price at which his licensee will sell will necessarily affect the price at which he can sell his own patented goods; that the requirement that the licensee adopt and maintain, for the patented devices which it can make legally only under the license, the terms and conditions of sale and prices established and observed by the licensor for the patented devices made by the licensor, is normally and reasonably adapted to secure pecuniary reward for the patentee's monopoly, and does not violate the Sherman Act. This decision and authority has not been overruled.

In *Ethyl Gasoline Corp.* v. *U.S.*, 309 U.S. 436, 456, it is held and established that the patent law confers on the patentee a limited monopoly, right or power to exclude all others fro mthe manufacturing, using or selling of his invention; that the extent of that right is limited by the definition of his invention as its boundaries are marked by the specifi-

cations and claims of the patent; that he may grant licenses to make, use or vend, restricted in point of space or time, or with any other restriction on the exercise of the grant and privilege, save only that by attaching a condition to his license he may not enlarge his monopoly and thus acquire some other which the statute and the patent together do not give.

In *U.S.* v. *E. I. du pont DeNemours & Co.*, 118 Fed. Supp. 41, 224, D.C.Del., it was held and established that the owner of the patents has the right to grant an exclusive license and that such a license in no way violates the provisions of the Sherman Act, and that the patentee has the right to license, including the right to select or reject prospective licensees and to prefer one over others for considerations within its discretion. This was not in any way modified or overruled on appeal to the Supreme Court, *351 U.S. 377.*

[fol. 1323] II. The establishment or fixing of prices and terms and conditions of sale for the patented lockbolts by defendant Huck Manufacturing Company, the owner of the patents, which was followed by its licensee, defendant Townsend Company, for the lockbolts which it manufactured and sold under the license from Huck, is in all material respects the same as that established and held in the U. S. v. General Electric case referred to above, not to be a violation of the Sherman Act.

III. In the case at bar there is no violation of the Sherman Act by Huck's establishment of the prices, terms and conditions of sale for the patented lockbolts and the following thereof by the licensee Townsend, for it is established law, under the General Electric case, that it is not a violation of the Sherman Act for a licensee to follow the prices, terms and conditions of sale of the patent owner, by agreement to do so. It is established law that it is not violation of the Sherman Act for Townsend, in the exercise of its own judgment, to follow Huck's prices and terms and conditions of sale. *U.S.* v. *International Harvester Co.*, 274 U.S. 693, 71 L. Ed 1302, Sylb. 4 and Opinion p. 310, where it is held:

> "The fact that competitors in business may see proper, in the exercise of their own judgment, to follow prices of another manufacturer, does not establish any

suppression of competition, or show any sinister domination."

Theatre Enterprises v. *Paramount Distributing Corp.*, 346 U.S. 537, 98 L. Ed. 273, Opinion p. 279 and Sylb. 2, where it is stated:

> "Although parallel business behavior is admissible evidence from which the finder may infer an agreement in restraint of trade violative of the Sherman Anti-trust Act Sec. 1, such parallel behavior does not itself constitute a Sherman Act offense."

IV. The refusal by Huck Manufacturing Company to grant licenses to manufacture and sell lockbolts under its lockbolt patents to Brown-Line Corporation, Olympic Screw & Rivet Corporation, Illinois Tool Works, Pheoll [fol. 1324] Manufacturing Corporation, and Republic Steel Corporation, in the exercise of its own judgment and right to select or reject prospective licensees and to prefer one over others for considerations within its discretion, is legal and not violative of the Sherman Act as held in the decision in *U.S.* v. *E. I. du Pont DeNemours* referred to above.

V. The so-called cross- or grant-back licenses from Townsend to Huck respecting improvements of Townsend are nonexclusive and provide no power for restraint or monopolization of trade in such improvement, and on the contrary being adverse to restraint and monopoly, are not a violation of the Sherman Act.

It is established law, in *Transparent-Wrap Machine Corporation* v. *Stokes and Smith Company*, 329 U.S. 637, 645-648; 91 L. Ed. 563, 570-572, that a covenant by a licensee under a patent license agreement to assign to the licensor patents for improvements is not *per se* illegal.

Furthermore, it is noted that in the cited case as distinguished from the case at bar, the improvements of the licensee were to be assigned outright to the licensor, which would give the licensor exclusive rights therein, while in the case at bar the grant-back provisions by the licensee give the licensor only a nonexclusive permission to use the licensee's improvements in common with the licensee and

with others all of whom the licensee is free to choose and license.

See also *Binks Manufacturing Co.* v. *Ransburg Electro-Coating Corp.*, 281 Fed. (2) 252, 259 (C.A. 7), where it is held that a license-back clause requiring future inventions by the licensee pertaining to method covered by the license to be licensed to the patentee royalty-free, on a nonexclusive basis, with right to sub-license others, is not *per se* illegal where there is no widespread network of such agreements between competing companies affecting an entire industry.

[fol. 1325] VI. The Court in a non-jury case, on motion under Rule 41(b), is not required to review the evidence in the light most favorable to the Government; it is required only to determine whether the plaintiff has made out its case by a preponderance of evidence. *Island Service Co.* v. *Perez*, 308 F.2d 799 (9th Cir. 1962); *Allred* v. *Sasser*, 170 F.2d 233 (7th Cir. 1948); *United States* v. *Borden Co.*, 111 F. Supp. 562 (N.D. Ill. 953); *aff'd in part, rev'd in part*, 347 U.S. 514 (1954); *Bach* v. *Friden Calculating Machine Co., Inc.*, 148 F.2d 407 (6th Circ. 1945); *Moore's Federal Practice*, 1044-45 (2d Ed., 1951). Barron and Holtzoff, *Federal Practice and Procedure*, (2) Ed. 1961, (Vol. 2b) pp. 149-151.

Where the evidence submitted gives equal support to each of two inconsistent inferences, neither is established, and judgment, as a matter of law, must go against the party upon whom rests the necessity of sustaining one of the inferences as against the other. *Penna.R.R.Co.* v. *Chamberlain*, 228 U.S. 333, 339-340, 79 L. Ed. 819, 823.

VII. I conclude upon the evidence submitted that the case at bar is in all material respects the same as and ruled by the decision in *U.S.* v. *General Electric Co.*, 272 U.S. 476, 489, and that it is distinguished in substantially the same respects as the General Electric case from the decisions in *U.S.* v. *Masonite Corp., et al*, 316 U.S. 265; *U.S.* v. *Univis Lens Company*, 316 U.S. 241; *U.S.* v. *Line Material Company, et al*, 333 U.S. 287; *U.S.* v. *United States Gypsum Co., et al*, 336 U.S. 364; *U.S.* v. *New Wrinkle, Inc., et al*, 342 U.S. 371; *Newburgh Moire Co.* v. *Superior Moire Co.*, 237 Fed. (2d) 283-284; *U.S.* v. *Besser Mfg. Co.*, 96 Fed. Supp. 304, 310-311; *U.S.* v. *Krasnov, et al*, 143 Fed. Supp. 184; *U.S.* v.

General Electric Co., 80 Fed.Supp. 989—which the Government urges as controlling.

[fol. 1326] In the case at bar the Court finds no industry-wide price-fixing licensing, no agreement or conspiracy between a plurality of licensees preventing grant of other licenses by the patent owner, no granting of a plurality of price-fixing licenses to a plurality of competing licensees, no cross licensing by one patent owner creating by contract in another the power to issue licenses and fix prices under patents which are not owned by the licensor, no pooling of independently owned competing patents with price-fixing licenses under the pooled competing patents, no arrangements for control of resale prices of patented devices, and no agreements for fixing prices on unpatented articles—some or all of which practices were found to be controlling aspects of the situations in the cases above mentioned on which the Government relies.

VIII. The Court concludes upon the evidence submitted by the plaintiff, and the law applicable thereto, that the plaintiff has not shown by preponderance of evidence that the defendants have or are engaged in a combination and and conspiracy in unreasonable restraint of trade and to monopolize interstate trade and commerce in lockbolts in violation of Sections 1 and 2 of the Sherman Act, and has not shown any right to relief as prayed.

IX. The Court concludes that the plaintiff has failed to prove a violation of Sections 1 and 2 of the Sherman Act for the additional reason that it failed to show that the patent arrangements between Huck and Townsend were designed to or did secure a reward beyond that to which Huck as the patent owner was legally entitled.

It Is Therefore Ordered that judgment be entered herein against the plaintiff dismissing this action and the Complaint filed herein.

Dated at Detroit, Michigan this 27th day of February, 1964

Thaddeus M. Machrowicz, U.S. District Judge

[fol. 1327] Proof Of Service (omitted in printing.)

[fol. 1328] [File endorsement omitted]

IN THE UNITED STATES DISTRICT COURT FOR THE EASTERN DISTRICT OF MICHIGAN

SOUTHERN DIVISION

Civil Action No. 21791

UNITED STATES OF AMERICA, Plaintiff,

v.

HUCK MANUFACTURING COMPANY AND TOWNSEND COMPANY, Defendants.

NOTICE OF APPEAL TO THE SUPREME COURT OF THE UNITED STATES—Filed April 27, 1964

I. Notice is hereby given that the plaintiff, the United States of America, hereby appeals to the Supreme Court of the United States from the judgment entered on February 28, 1964, dismissing this action.

This appeal is taken pursuant to 15 U.S.C. 29.

II. The Clerk will please prepare a transcript of the record for transmission to the Clerk of the Supreme Court of the United States, and include therein the entire record before the district court, including all papers filed with the Clerk of the court in this proceeding and this Notice of Appeal.

III. The Questions Presented:

1. Whether the decision in *United States* v. *General Electric Co.*, 272 U.S. 476, insofar as it holds that an agreement between a patent owner and its licensee that the licensee will sell the patented product only at prices established by the patentee does not violate Section 1 of the Sherman Act, should be overruled.

2. Whether, in any event, an agreement by which a patentee undertakes not to grant any other unrestricted li-

censes upon condition that its sole licensee would follow the patentee's prices, violates Section 1 of the Sherman Act.

Arthur J. Murphy, Jr., Attorney, Department of Justice, Washington, D. C. 20530. Lawrence Gubow, United States Attorney.

[fol. 1329] Proof of Service (omitted in printing.)

[fol. 1330] [File endorsement omitted.]

[fol. 1331] In the United States District Court, Eastern District of Michigan, Southern Division

Civil Action No. 21791

[Title omitted]

Motion of Defendants to Supplement the Record—Filed May 27, 1964

The Defendants, Huck Manufacturing Company and Townsend Company, by their respective attorneys, now move this Honorable Court to enter as Orders of this Court constituting part of the Record in the above entitled action two Pretrial Orders, in the forms attached hereto and captioned respectively "Pre-Trial Order" and "Second Pre-Trial Order," for the reason that the entry of these Orders to supplement the Record in this Court is necessary in order that the Record of proceedings truly disclose what occurred in this Court. A true, accurate and complete representation of what transpired is necessary because of the appeal to the Supreme Court of the United States heretofore filed on behalf of the United States of America.

The "Pre-Trial Order" attached hereto is identical to the "Pre-Trial Order" forwarded by the Court to counsel for the respective parties on or about January 15, 1963, except for those portions in the attached "Pre-Trial Order" which are underlined. The portions underlined are sug-

gested by the Defendants as necessary insertions in said "Pre-Trial Order" in order completely and accurately to describe the position of the Government at the pretrial stage and during the trial itself as to the validity of the decision in *United States* vs. *General Electric,* 272 U.S. 476 (1926) and its applicability to this action.

[fol. 1332] At the pre-trial hearing on October 1, 1962, the Government was asked directly by the attorneys for the Defendants whether or not the Government intended in this case to attempt to overrule *United States* vs. *General Electric, supra.* The Government stated that it would restudy the facts and advise Defendants of its position as to the applicability of the *General Electric* decision to this case. Subsequently, at a pre-trial hearing on October 15, 1962, the Government reported on the applicability of the *General Electric* case. It stated that it was not attempting to have the doctrine set in the *General Electric* case overruled in this case. It stated its position as being that the facts in this case do not fall within that doctrine and that the doctrine is still good law but does not apply, since acts in this case are illegal without application of the doctrine. The Government agreed to write a letter pointing out how the Government felt the facts in this case differed from the facts of *United States* vs. *General Electric, Supra,* which was done in a letter of October 30, 1962, addressed to the Honorable Thaddeus M. Machrowicz and distributed to the attorneys for Defendants in this case.

The "Second Pre-Trial Order" attached hereto is identical to the "Second Pre-Trial Order" forwarded by the Court to counsel for the respective parties in January, 1963. No supplements or changes appear to be necessary in order that this "Second Pre-Trial Order" completely and accurately disclose what occurred in this Court.

John C. Sterritt, Harness, Dickey & Pierce; Albert M. Stern, Stern & Rossier, per John C. Sterritt, Attorneys for Huck Manufacturing Company, Defendant. T. W. Pomeroy, Jr., W. Walter Braham Jr., Kirkpatrick, Pomeroy, Lockhart & Johnson, Attorneys for Townsend Company, Defendant.

[fol. 1333] UNITED STATES DISTRICT COURT, EASTERN DISTRICT OF MICHIGAN, SOUTHERN DIVISION

Civil Action No. 21791

UNITED STATES OF AMERICA, Plaintiff,

vs.

HUCK MANUFACTURING COMPANY, INC., AND TOWNSEND CO., Defendants.

PRE-TRIAL ORDER

At a session of said Court held in the Federal Building, in the City of Detroit, Michigan, on the _____ day of _____, 196

Present: Honorable Thaddeus M. Machrowicz, U.S. District Judge

Pursuant to notice a pre-trial hearing was held in the above matter on October 1, 1962, and continued on October 15, 1962. Parties to this action were represented at the hearing by the following counsel:

The Government—by Charles R. Esherick and Jack Louis Lipson, Department of Justice, Anti-Trust Division, Washington, D. C.

Defendant Huck Manufacturing Co., Inc.—by Arthur W. Dickey, John C. Sterritt, and Albert M. Stern; and

Defendant Townsend Co.—by Thomas W. Pomeroy, Jr., Samuel K. McCune, W. Walter Braham, Jr., and W. Gerald Warren.

A motion to admit defendants' out-of-state counsel to practice in this Court, for the purposes of this case only, was made and granted.

The complaint filed in this case charges defendants with a conspiracy to violate the Sherman Anti-Trust Act. Defendants deny the existence of any conspiracy and deny violation of the Act in any respect.

No amendments to pleadings are contemplated by either side.

A criminal prosecution, based on charges which gave rise to the instant case, is presently pending before another

Judge of this Court, but not all counsel who appear in this [fol. 1334] case are involved in the criminal proceeding. Documents which will be introduced in evidence in the criminal case will also be used as exhibits in the present suit. A list of such documents will be furnished by the Government to defendants.

Although it is expected that proof in the civil and criminal cases will be similar, the Government is not obligated and does not intend to limit its proof in this case to the same evidence that it intends to produce in connection with the criminal litigation. Evidence in addition to that introduced in the criminal case may be introduced in this case and not all evidence expected to be introduced in the criminal case need be introduced in this case.

Discovery will be extensive unless information counsel expect to elicit upon discovery is voluntarily submitted. To this end, questions which defense counsel intended to include in proposed interrogatories were discussed and information was voluntarily offered by Government counsel in answer to some of the questions. As to the remaining questions defense counsel were advised to proceed by filing interrogatories or by motion.

The only facts defendants concede at this time are those admitted in pleadings on file.

Government counsel advised opposing counsel that they will submit proof in support of charging allegations contained in paragraphs 14, 15 and 16 of the complaint but will offer no independent proof as to allegations of paragraph 17, although proof on the charging allegations may also incidentally refer to allegations of paragraph 17 as to alleged effects of the conspiracy charged. It is the Government's position that proof of the conspiracy establishes the natural effects of the conspiracy and that it is not incumbent upon the Government to present independent proof as to effects of the conspiracy in an action of this type.

Defendants requested from the Government a list of its proposed witnesses at the trial with identification of the allegations in the complaint as to which each witness will [fol. 1335] testify. Government counsel agreed to furnish the list of proposed witnesses, without being limited to such witnesses only and without being bound to call each witness

on the list; they objected to giving the gist of the testimony of each proposed witness.

As a result of the discussions between counsel, and in response to direct questions at the pre-trial hearing, Government counsel offered the following information to defense counsel to aid them in preparation for trial:

1. The Government makes no claim of invalidity of patents to which reference is made in paragraphs 14, 15 and 16 of the complaint;
2. The Government will rely upon the written agreements mentioned in the complaint as the licensing agreements which formed a part of the alleged conspiracy;
3. Validity of the written agreements themselves will be challenged insofar as they form a part of an alleged over-all agreement constituting a conspiracy to violate the Act, it being the claim of the Government that the written agreements are tainted by the illegality of the over-all agreement;
4. The Government relies not only upon the alleged oral agreement reached at a secret meeting mentioned in the complaint, but upon oral instructions given on other occasions in modification, alteration, extension, etc., of the original oral agreement;
5. Only one conspiracy is charged by the Government. The Government will rely upon the agreement described in paragraph 16-b of the complaint, as the basic agreement, but it may also introduce independent evidence of meetings of defendants' officers to establish existence of the alleged conspiracy;
6. Counsel for the Government were not ready to state whether they will rely solely upon the alleged agreement to fix prices and to limit licensing, but after a re-study of the facts they will advise defendants whether additional claims will be made in support of allegations as to existence of a conspiracy;

[fol. 1336] 7. The Government is proceeding on the same theory of law in this case as it has advanced in the criminal case, which has been discussed in briefs submitted in the criminal case. On October 1 the Government stated that after a re-study of the facts it will advise defendants of its position as to

applicability of the General Electric case decision, if any, to this case. On October 15, reporting on the applicability of the General Electric case, the Government stated that it is not attempting to have the doctrine set in the General Electric case overruled and stated only that facts in this case do not fall within that doctrine; that the doctrine is still good law but does not apply as the actions in this case are illegal without application of the doctrine; and that it will write a letter by December 29 describing in what way the facts of this case differ from the facts of the General Electric case. A copy of the letter to the Court, dated October 30, 1962, from the Assistant Attorney General of the United States, Antitrust Division of the Department of Justice is attached hereto and made a part hereof.

8. The Government's prayer for relief will be stated in more specific terms after narrowing of the issues involved, in advance of trial.
9. Counsel agreed to confer immediately upon conclusion of a pre-trial hearing in the criminal case scheduled for October 15, 1962, with reference to matters discussed at this hearing and particularly as to information to be submitted by the Government as covered by sub-sections 3, 6 and 7 of this pre-trial order.

Government counsel agreed to submit to defendants, by not later than December 15, 1962, a list of firms which were regarded as qualified manufacturers of lockbolts and lockbolt parts, as well as a list of patents (identifying them by number) which the Government claims had their authorized monopolies extended beyond the scope permitted by law.

Since the pre-trial hearing counsel reported that the criminal trial has been set for February 19, 1963. It was agreed that all discovery proceedings shall be suspended for a period of two (2) weeks in advance of the criminal trial and during the progress of the trial.

Government counsel also advised the Court and opposing counsel of its position that facts in the instant case do not fall within the category of cases to which the doctrine

expressed in the General Electric decision applies, and that the acts complained of in suit are illegal without application of that doctrine.

[fol. 1337] On the basis of the pre-trial discussions, agreements reached between counsel, and directives of the Court,

It Is Ordered:

1. Thomas W. Pomeroy, Jr., Samuel K. McCune, and W. Walter Braham, Jr., all of Pittsburgh, Pennsylvania, are admitted to practice in this Court, for purposes of this case only.
2. Plaintiff shall submit to the Court and to the defendants, before the date of the adjourned pre-trial hearing, a list of documents which it proposes to submit in evidence at the trial.
3. Counsel shall report to the Court at the adjourned pre-trial hearing on the progress made toward completion of discovery.
4. The pre-trial hearing is continued to December 21, 1962 at 3:00 P.M.

Thaddeus M. Machrowicz, U.S. District Judge.

[fol. 1338] JCS, AWD.

LL:LB:CRE
60-126-47

October 30, 1962

Honorable Thaddeus M. Machrowicz,
United States District Judge,
United States District Court for
the Eastern District of Michigan,
Federal Building,
Detroit 26, Michigan.

Re: United States v. Huck Manufacturing Company, Inc. and Townsend Company—Civil Action No. 21791

Dear Judge Machrowicz:

In the course of the pretrial conference held in your chambers on October 15, 1962 in the above-captioned case, counsel for defendant Townsend Company requested that the Government provide a statement describing in what

way the facts of this case differ from the facts of *United States* v. *General Electric,* 272 U.S. 476 (1926).

In *United States* v. *General Electric* the relevant issue dealt only with the question of the validity under the Sherman Act of the price-fixing clause in a patent license agreement between a patentee and its licensee. The narrow decision in that case was that under those circumstances the price-fixing clause was legal. In the Supreme Court's more recent interpretation of that rule in *United States* v. *Line Material Company,* 333 U.S. 287 (1947), the limited nature of that *General Electric* ruling was emphasized and as the Supreme Court said:

> On the assumption *where a conspiracy to restrain trade or an effort to monopolize is not involved,* a patentee may license another to make and vend the patented device with the provision that the licensee's sale price shall be fixed by the patentee. (304) [Emphasis supplied]

Applying this rule to the facts of the *Line Material* case the Supreme Court proceeded to strike down an arrangement by which two patentees had cross-licensed each other [fol. 1339] and which arrangement also authorized one to fix prices under both patents. The Court characterized such an agreement as establishing an "intention to restrain." (312)

> Even where the agreements to fix prices are limited to a small number of patentees we are of the opinion that it crosses barriers erected by the Sherman Act against the restraint of trade though restraint is by patentee and their licensees. (*Ibid.*)

Since the date of the *Line Material* decision it has been held that mere price fixing, even when not coupled with any other restraints of trade, is nevertheless unlawful when incorporated in a series of patent licenses with substantially all manufacturers in an industry, *United States* v. *New Wrinkle, Inc.,* 342 U.S. 371 (1952), and even when incorporated in patent licenses with a mere plurality of firms in an industry, *Newburgh Moire Co.* v. *Superior Moire Co.,* 237 F. 2d 283-84, (3rd Cir. 1956).

The acts of defendants in this action fall within the prohibited area outlined in the foregoing cases. The complaint in this case charges defendants with having gone beyond a mere price-fixing arrangement. It charges that they have combined price fixing with a secret understanding not to license others and with further agreements to cross-license and grant back all future developments in the lockbolt field as part of a conspiracy to restrain trade and monopolize.

Moreover, on June 29, 1962, Honorable Fred W. Kaess, United States District Judge in this court in a companion criminal action to this captioned case (*United States* v. *Huck Manufacturing Company et al.*, Criminal No. 39017), ruled that the facts asserted in the indictment in that case —which are substantially identical to the facts asserted in the civil complaint in this case—fell outside the *General Electric* doctrine. Specifically, Judge Kaess stated:

> . . . [T]he defendants move to dismiss the indictment for not stating facts sufficient to constitute an offense against the United States. They rely chiefly upon the leading case of *United States* v. *General Electric Co.*, 272 U.S. 476. There, indeed, a price restriction was upheld, but it must be recognized that not all price-restrictive licenses are valid. *United States* v. *Line Material Co.*, 333 U.S. 287; *United States* v. *United States Gypsum Co.*, 333 U.S. 364. Necessarily, the courts will look beyond the price restriction itself and consider the circumstances surrounding the exploitation of the patent. Experience counsels such an ap-[fol. 1340] proach, for an agreement innocent when considered separately may be part of a plan condemned by the Sherman Act. Thus, the holder of a patent may not do as he pleases with the power granted him under the Patent Act, 35 USC § 154, but is subject in its exercise to the principles of the Sherman Act. Cf. *American Tobacco Co.* v. *United States*, 147 F. 2d 93, aff'd. 328 U.S. 781. See Furth, Price-Restrictive Patent Licenses Under the Sherman Act, 71 Harv. L. Rev. 815.

Accordingly, we submit that the facts of this case fall outside the facts and law of *United States* v. *General Eelctric,* supra.

Sincerely yours, Lee Loevinger, Assistant Attorney General, Antitrust Division. By: Charles R. Esherick, Attorney, Department of Justice.

cc: Thomas W. Pomeroy, Jr., Esquire, 1130 Oliver Building, Pittsburgh 22, Pennsylvania. Arthur W. Dickey, Esquire, 7-141 General Motors Building, Detroit 2, Michigan.

[fol. 1341] UNITED STATES DISTRICT COURT, EASTERN DISTRICT OF MICHIGAN, SOUTHERN DIVISION

Civil Action No. 21791

UNITED STATES OF AMERICA, Plaintiff,

vs.

HUCK MANUFACTURING COMPANY, AND TOWNSEND COMPANY, Defendants.

SECOND PRE-TRIAL ORDER

At a session of said Court, held in the City of Detroit, Michigan, in the Federal Building, on the —— day of ————, 196—

Present: Honorable Thaddeus M. Machrowicz, U.S. District Judge

At an adjourned pre-trial hearing held in this matter on December 21, 1962, the parties were represented by counsel of record.

Pursuant to agreement reached at the first pre-trial hearing the Government filed a statement which includes a list of patent numbers relevant to this suit, a selected list of manufacturers of lockbolts and lockbolt parts it deems qualified, and a list of its proposed witnesses.

The Government was requested by defendants to identify

which of the manufacturers on the list were allegedly refused licenses and it agreed to make such identification, giving dates on which application for a license was made in each instance, if available.

A proposed list of defendants' witnesses was requested by the Government and defendants were directed by the Court to furnish such a list within the time limited therefor. Defendants will not be limited thereby and may call additional witnesses or refrain from calling any of the witnesses named on the list, if circumstances warrant it at the time of trial.

[fol. 1342] With reference to the list of allegedly qualified manufacturers the Government asked for defendants' comments respecting qualification of such manufacturers; defendants agreed to do so within two (2) weeks from the date of the hearing and a statement to that effect is now on file.

Actual copies of documents included in proposed exhibits of the Government were furnished to defendants and a request was made at this hearing for admissions as to genuineness of such documents. Defendants were directed to admit or deny genuineness of each of such documents or to indicate lack of knowledge if genuineness was not admitted or denied. Since the pre-trial hearing defendants submitted lists of documents which each defendant admits are genuine.

The terms "substitutes for lockbolts" and "related products" are given in paragraphs 15-d and 16-c of the complaint. Defendants asked for information as to products, if any, the Government contends are included within those terms. Government counsel indicated that the paragraphs referred only to an agreement, not to a particular product, and if such terms were included in any alleged agreement it is not necessary to go beyond proof of such agreement. It was agreed, however, that if any particular products can be identified, the Government will advise defendants in advance of trial.

Paragraph 5 of the complaint defines the term "lockbolt". Defendants asked the Government to state whether the definition was intended to cover anything beyond the description in the patent and whether the Government has reference to the type of lockbolt illustrated in the appendix to the complaint except for differences in size, shape,

material, etc. Government counsel agreed to review the file and to advise defendants whether the definition will be limited to the definition to the patents disclosed, whether reference will be made to additional patents, and whether the definition of lockbolts in the complaint will be amended. [fol. 1343] The complaint charges that authorized monopolies of patents were extended beyond the scope permitted by law. Asked for a clarification of the scope, the Government stated its claim to be that the scope was extended beyond that permitted by law by the general conspiracy as alleged in the complaint.

At the first pre-trial hearing Government counsel advised that they will rely upon the written agreements mentioned in the complaint as the licensing agreements which formed a part of the alleged conspiracy. In view of alleged oral agreements reached at a secret meeting and subsequent oral alterations, amendments, extensions, etc. of such agreements on "other occasions", defendants asked, in the event the Government intends to rely upon agreements other than those identified in the complaint as the licensing agreements forming a part of the alleged conspiracy, either oral or written, that it identify each and every such licensing agreement, giving dates, names of persons participating, place, and substance of the meeting or discussions on each of these occasions. The Government agreed to furnish dates, names of participants, and places at which such alleged agreements or modifications thereof were reached, and, to the extent it can do so, will give the substance of the meetings or discussions.

It is Therefore Ordered:

1. The Government shall furnish to defendants by February 10, 1963 a list of manufacturers of lockbolts and lockbolt parts who were allegedly refused licenses by defendants and approximate dates on which applications for licenses were made.
2. Defendants shall submit to the Government by January 20, 1963, a list of its proposed witnesses but shall not be limited to such witnesses if circumstances at the time of trial warrant production of additional witnesses or non-production of witnesses named on the list.

[fol. 1344] 3. All other information which either side agreed, either at the first or second pre-trial hearing, to furnish to the other side, shall be submitted by February 10, 1963, unless reasons for non-production are given to the Court prior to that date. As to any additional requests upon which the parties cannot agree, they shall proceed in accordance with the rules.

Thaddeus M. Machrowicz, U.S. District Judge.

[fol. 1345] CERTIFICATE OF SERVICE

I hereby certify that on the 27th day of May, 1964, I deposited in the United States mails, postage prepaid, addressed to plaintiff's attorneys Messrs. Charles R. Esherick, Jack L. Lipson, and Arthur J. Murphy, Jr. Room 3123 Antitrust Division, United States Department of Justice, Washington D. C., Messrs. Lawrence Gubow and Robert Ritzenheim, 869 Federal Building, Detroit, Michigan 48226, true copies of defendants' foregoing Motion of Defendants to Supplement the Record of the Above Entitled Action by the Entry of Pre-Trial Orders and the Notice of Motion for Hearing.

John C. Sterritt, Harness, Dickey & Pierce, Attorney for Defendant, Huck Manufacturing Company.

[fol. 1346] [File endorsement omitted]

IN THE UNITED STATES DISTRICT COURT FOT THE EASTERN DISTRICT OF MICHIGAN, SOUTHERN DIVISION

Civil Action No. 21791

[Title omitted]

ORDER EXTENDING TIME—June 15, 1964.

Upon motion of plaintiff-appellant United States of America, defendants-appellees consenting thereto, it is hereby ordered that the time for the appellant to docket this case on appeal and to file a jurisdictional statement in the Supreme Court of the United States shall be extended for a period of 31 days, i.e., until July 27, 1964.

Thaddeus M. Machrowicz, United States District Judge.

Dated: June 15, 1964.

[fol. 1347] [File endorsement omitted]

IN THE UNITED STATES DISTRICT COURT FOR THE EASTERN DISTRICT OF MICHIGAN, SOUTHERN DIVISION

Civil Action No. 21791

UNITED STATES OF AMERICA, Plaintiff,

v.

HUCK MANUFACTURING COMPANY, INC., AND TOWNSEND CO., Defendants.

Transcript of proceedings upon Defendants' Motion to supplement record—Honorable Thaddeus M. Machrowicz, District Judge, at Detroit, Michigan—June 22, 1964.

APPEARANCES:

Mr. Jack L. Lipson, Attorney, Department of Justice, Antitrust Division, Washington, D. C.; Appearing on behalf of the Plaintiff.

Messrs. Harness, Dickey & Pierce. By Mr. John A. Blair and Mr. John C. Sterritt and Messrs. Stern and Rossier. By Mr. Albert M. Stern, Appearing on behalf of Defendant Huck Mfg. Co.

Messrs. Kirkpatrick, Pomeroy, Lockhard & Johnson, 1130 Oliver Building, Pittsburgh, Pa. 15222. By Mr. Thomas W. Pomeroy, Jr. and Mr. W. Walter Braham, Jr., Appearing on behalf of Defendant Townsend Co.

[fol. 1348] 10:00 o'clock A.M.

The Clerk of the Court: United States of America vs. Huck Manufacturing Company, Inc., and Townsend Company.

The Court: All parties ready?

Mr. Stern: Yes.

The Court: All right, I will hear from the proponents of the motion.

Mr. Stern: If it please the Court, we have handed to counsel——

The Court: I would suggest that you get as close to the

microphone as possible. We are getting quite a bit of interference from the outside.

STATEMENT ON BEHALF OF DEFENDANT, HUCK AND COLLOQUY

Mr. Stern: I will do the best I can.

May I say to the Court, I have before me a proposed order, as well as a short memorandum brief in support of the motion, and I would like the permission of the Court to pass those up to the Court for the Court's assistance in this matter. Along with that are the two photocopies of the proposed orders that we are asking the Court to sign, other than the order we are asking the Court to sign granting this motion.

[fol. 1349]

May it please the Court, as extremely briefly as I can put it, the record, as this Court will well appreciate, is being prepared by the appellants to the United States Supreme Court. It has been noted that a proposed pre-trial order was never formally entered and we have proposed that it be entered along with a supplement thereto. The supplement only differs from the original in that it includes an item that we believe appropriately should be included, and that is the item indicating the position of the Government, which we state to be that they do not intend to ask for an overruling of the General Electric case.

I am prepared to go on at some length, or particularly to answer any questions of the Court. But, for the moment, I believe the issue is narrow.

The Court: The supplement is the letter itself to the Court?

Mr. Stern: No, that is offered in support of the order itself.

The Court: Where is the supplement?

Mr. Stern: The Court has the original of the proposed original order, and the supplement order is attached to the original motion which the Court likewise has.

[fol. 1350]

When I say "the Court has," I mean it has been made available in the file.

Mr. Braham: May it please the Court, it is in paragraph seven in the original order, on page four of the First Pre-Trial Order, which the Court has attached to the motion. It is the portion which is underlined in paragraph seven.

The Court: That is in the proposed pre-trial order attached to the motion?

Mr. Stern: Yes, your Honor.

The Court: Those are unnumbered paragraphs.

Mr. Braham: May it please the Court, on page three there are some numbered paragraphs, and on page four is paragraph seven of the supplement underlined.

The Court: All right, I will hear from the Government as to its position on it.

Mr. Lipson: Your Honor, may I ask, before we begin, whether Mr. Stern has spoken for both defendants? I understand that both defendants have joined on the motion.

The Court: I presume that is correct.

Mr. Stern: I say I speak for Huck, but counsel for Townsend I am assured join in that.

Mr. Braham: May it please the Court, we are willing to abide by that.

[fol. 1351] The Court: Are you joining in the motion?

Mr. Braham: Yes, it is a joint motion and the brief is jointly submitted also, and we join in the oral argument which Mr. Stern has presented. We may hear from the Government. There may be nothing with which we quarrel with the Government on.

STATEMENT ON BEHALF OF PLAINTIFF AND COLLOQUY

Mr. Lipson: May it please the Court, my name is Jack Lipson and I am from the Department of Justice at Washington, and I have had the honor of appearing before you earlier in this case.

I would like to make it clear that the Government opposes the motion of both defendants.

As we understand the motion, they seek two things:

One, to incorporate into the trial record of this case the pre-trial orders and letter from Government counsel to yourself, copies of which were made available to defendants' counsel at the time. This material is not presently in the record.

The second part of their motion, as we understand it, would add material to one of those pre-trial orders which was not present at any time in those pre-trial orders, was not the subject of your Honor's order——

The Court (Interposing) That is paragraph seven on [fol. 1352] page four?

Mr. Lipson: That is correct, your Honor, on page four of the Proposed motion that the defendants have served.

The Court: The "proposed order," you mean?

Mr. Lipson: That is right, your Honor, proposed order.

If I may review the facts slightly, on October 15, 1962, there was a pre-trial conference before your Honor in your Honor's chambers in this matter and at that time the subject was discussed as to the relationship of the General Electric decision to the facts of the Huck case. I believe Mr. McCune, counsel for the defendant Townsend Company, asked what the Government's position was with respect to it and we made some response, and the response made at that pre-trial conference is incorporated at this time in the actual pre-trial order that has been entered by your Honor to this case.

The Court: What is that?

Mr. Lipson: By the way, your Honor, the orders were actually entered January 15th, I believe is the date, of 1963. The specific paragraph I am referring to is on the next to the last page, page four of the First Pre-Trial Order, beginning at line 25. It states:

> [fol. 1353] "Government counsel also advised the Court and opposing counsel of its position that facts in the instant case do not fall within the category of cases to which the doctrine expressed in the General Electric decision applies, and that the acts complained of in suit are illegal without application of that doctrine."

I have examined both pre-trial orders in this case, your Honor, and I have also examined the other papers in this case and, except for the letter which I will refer to, I believe that states entirely all concessions or discussions with respect to the General Electric decision in this case.

I maintain that the material that the defendants seek to introduce in the earlier paragraph of this same pre-trial order were not, in fact, agreed upon by the Government as its position. They purport to state the Government's position. We maintain that the Government's position is adequately stated and completely stated in the paragraph I have read to your Honor.

I would also like to point out to your Honor that the pre-trial orders in this case were not drafted by counsel for the Government or by counsel for the defendants. They [fol. 1354] were drafted by your Honor or your Honor's office, as I believe they would have been done from minutes which your Honor's own clerk took at these pre-trial conferences; therefore, the pre-trial orders, as they presently stand, lack any bias of counsel, one way or the other, and appear to be objective statements of what the Government's position was at all times, with respect to the General Electric doctrine.

At that same pre-trial conference, in the paragraph numbered seven, on that same page, the Government stated, "After a re-study of the facts it will advise defendants of its position as to applicability of the General Electric case decision, if any, to this case."

That is the basis upon which the subsequent letter was written, and that letter was the letter of October 30, 1962, to your Honor, copies of which were contemporaneously made available to both defendants, Huck and Townsend.

Your Honor, I would like to review for a moment something quite important, and that was the manner in which these pre-trial orders were finally signed.

If you will recall, the date of the conference was October 15th, and the pre-trial orders were not signed until January 15th, of the next year. During the interim, your [fol. 1355] Honor circulated draft pre-trial orders among all counsel. At that time all of the drafts were in circulation and while in circulation, I believe counsel for the Government, and I know counsel for both defendants made corrections and additions to the pre-trial orders as they were then in draft form.

I refer specifically to the December 28 letters from Defendant Huck Manufacturing Company and Defendant Townsend Company—I am sorry if I said "letters," your Honor; I believe they were documents which they filed with this Court. But never in any of these corrections that the defendants or the Government proposed was there any change even suggested, as far as I can tell, to this material dealing with the General Electric decision. Counsel was quite satisfied that the material I have just recited to your Honor completely and correctly stated the Government's position, as it was brought out in pre-trial conference.

Now, about a year and a half after the pre-trial conference, when the memory perhaps is not as clear, this amendment is sought to be inserted:

I think a review of the way the pre-trial orders were formulated, the objectivity on the face of them, and the fact that defendants had timely opportunity to make corrections, and they thought that perhaps none were neces-
[fol. 1356] sary, that the conclusion is obvious that the pre-trial orders as they presently stand, correctly state what they purport to state. That is the Government's position and was at the pre-trial conferences.

I would also like to point out to your Honor that the material which the defendants seek to insert in the paragraph numbered seven of the pre-trial order, does not accurately state the Government's position with respect to the General Electric case.

The Court: In what respect?

Mr. Lipson: The Government's position with respect to the General Electric case in this Court——

The Court (Interposing) Can you state exactly what the Government's position is or was?

Mr. Lipson: Yes, your Honor.

The Court: That would probably help.

Mr. Lipson: I think it is essentially as I have read from that portion of your Honor's pre-trial order.

The Court: Namely, the facts here——

Mr. Lipson: (Interposing) That the facts are outside of General Electric, and whether or not we will attack the General Electric decision, even if we could do so in this District Court, is a question we don't reach. It is not a relevant question for your Honor's consideration.

[fol. 1357] Now, as the case has been noted on appeal to the Supreme Court——

The Court: (Interposing) Your position, essentially, is that the facts in this case differ from those in General Electric and that the General Electric case therefore does not apply?

Mr. Lipson: That is the way we tried this case, and I believe that the brief that the Government submitted in this case supports that statement of what the Government's position is in this case.

I would also like to point out to your Honor that the Government has the right to state its own position in these

matters, since the amended material seeks to state what the Government's position is.

If the defendants had made a timely objection, then the pre-trial order was not complete as it stands now. that is while it was being circulated in draft form, and any time before trial, the Government would have then, under your Honor's procedure, would have had an opportunity to restate its position so that any misunderstandings could have been cleared up completely. But under this procedure, the change is a unilateral change and the Government is stuck with a position that the defendants were—this is not the [fol. 1358] Government's position, that the defendants are stating, even though it purports to be such, and the Government should at least be given its chance to effectively state what its position in this matter is.

I think for that reason the Government would be definitely prejudiced, whereas the defendants would not be, if the amended version of this pre-trial order is incorporated into this trial record.

The Court: Has the last pre-trial order actually been entered? I understand that it has not.

Mr. Lipson: I believe it has on January 13th.

The Court: I understand it has not been entered.

Miss Stack: No, it has not.

The Court: I believe not.

As I understand now, it has not been entered.

Mr. Lipson: Well, your Honor, I have a letter in my file that I am referring to now, dated January 15th, in the United States Attorney's office in this building, to us in Washington, stating:

> "We are enclosing herewith two copies of orders entered by the Honorable Thaddeus M. Machrowicz in the above-entitled matter, and copies of the order are attached hereto."

[fol. 1359] The Court: Well, my information handed to me here indicates that the orders were never actually entered because there never actually was an approval from all of the parties for the entry of the order in the form in which it was finally submitted.

Now, have any of you examined the file?

Has counsel for the plaintiff examined the file?

Mr. Lipson: I had relied on the letters sent to me. I just recited to your Honor the letter that the orders were, in fact, entered.

The Court: I thought probably you were under the impression that it had been entered.

Have you checked the file?

Mr. Stern: I have not, personally. I have relied upon my information.

The Court: Miss Stack, you have checked the file and it has not been entered?

Miss Stack: (Shakes head in the negative.)

The Court: That is the first situation we have got to consider we are faced with.

There is no order entered, and the reason for it, I find from the notes handed to me, was that there has never been a final approval by all parties of the form in which it [fol. 1360] was submitted.

Now, in view of that, let me ask you first. You haven't any objection to a pre-trial order being entered at this date? The contents of it may be discussed later, and I would probably assist in the discussion. But in view of this fact which I presume you were not aware of, until this moment,——

Mr. Lipson: (Interposing) I think so, your Honor, and let me state the reason for it. There were pre-trial conferences held in this case while the criminal case was also being moved forward. The criminal case, as your Honor will recall, was tried first, and after the criminal case was concluded, counsel for both sides approached your Honor and we stipulated and agreed that the record in the criminal case would then be introduced into the civil action, and the civil action would then be tried on that record, and the defendants would move to dismiss on that record.

There is an actual stipulation signed by all counsel dated, I believe, April 12, 1963, and an order of your Honor's based on that stipulation.

The Court: Which is what?

Mr. Lipson: This is a stipulation——

The Court: All right, will you read a part of the stipulation or the order?

[fol. 1361] Mr. Lipson: I will read from the order:

"It is Hereby Ordered that the same stipulation be and hereby is approved, and that the record in the proceedings in the United States vs. Huck Manufacturing Company is hereby received in evidence in this action, subject to all objections appearing therein."

A part of that line did not come out on the copying machine but I will skip that, your Honor.

"—constitutes the plaintiff's case in chief in this action on which plaintiff rests.

"And, further, that the defendants move, on or before April 15, 1963, pursuant to the Federal Rules of Civil Procedure for a dismissal of this action on that record."

I think the important words in that, your Honor, are "on that record."

Therefore, the pre-trial orders you are referring to here were never actually a part of the case as it was tried, as it was briefed, as it was argued, and as it was decided, and we had counsel's agreement to this and the stipulation on which the ruling was based, and we had the order itself entered by your Honor on April 2, 1963.

[fol. 1362] So I think, in any case, a pre-trial order at this stage of the proceedings, when the case is already terminated in the District Court and is now on appeal to the Supreme Court, it is just too late. The record has to be closed some time, and it certainly should be closed after trial and certainly after the decision, and most certainly when the case is being appealed to a superior court.

The Court: Do you question the authority of the Court at this time to enter such an order? Is that your position? Do you question the propriety?

Mr. Lipson: No, we are not questioning. We think it would not be improper to do so.

The Court: You feel that the Court would have authority, then, to enter such an order if through an oversight of someone the order had not been entered?

Mr. Lipson: I hesitate to commit the Department on that point. I am merely not prepared to give a firm statement.

Unless otherwise noted, I think, in a matter of judicial

oversight or administrative oversight, and an order should have been entered and had not been entered, it probably could be incorporated into the trial record.

The Court: Am I correct in saying, on the basis of what [fol. 1363] you previously told me, that both parties presumably agreed on the form of the pre-trial order at that time, without those portions in paragraph seven on page four, which you contend now is being added?

Mr. Lipson: Yes, your Honor. So far as the Government is concerned, I will state now that we were under the impression that the pre-trial orders were, in fact, enter-d in this case.

You asked whether both parties were under that impression?

The Court: Well, I will ask them as soon as you are through.

Mr. Lipson: As I have stated, your Honor, I think the Government would be prejudiced if this additional language would be incorporated in the pre-trial orders, and the pre-trial orders themselves were incorporated in the record.

The Court: That is what I wanted to know, what the main thrust of your argument was, whether it was the additional language of paragraph seven that is intended to be added?

Mr. Lipson: That is the most serious objection we have, your Honor, there is no question about it. I doubt very much that we would be here opposing this motion if it were merely a motion to have some pre-trial orders added [fol. 1364] to the record in this case, but we take a very firm and very strong position that pre-trial orders entered before trial cannot be amended and supplemented by incorporating additional material after trial. The record must stand as it is. Apparently every one was satisfied with the record at the time, and there was no attempt to change that portion of the record when the drafts were being circulated, or at any time before this motion was filed and argued, and I submit, your Honor, that the Government would be prejudiced because it would be bound to a position it did not advocate.

I would also like to make clear at this time that, so far as the appeal is concerned, whether your Honor grants the

defendants' motion or not, the Government wants to state categorically that it does not waive its right to contest the validity of the General Electric case in the Supreme Court, and this case, or any other case for that matter, and that nothing done below can affect the right of the United States, through the Solicitor General, to appeal legal questions to the Supreme Court. We say there was never any waiver. And, regardless of what is stated by your Honor,

---

The Court: (Interposing) I don't know that this Court is attempting to take any of those rights away.

Mr. Lipson: I appreciate that, your Honor, but the only [fol. 1365] reason I can fathom for seeking this pre-trial order at this time is in preparation for such an argument to *the* made either to this Court or to the Supreme Court on appeal, and for that reason I would like to make it perfectly clear that the Government at no time waives its right to contest the validity of the General Electric decision.

We didn't seek to have your Honor overrule that decision, and I think it is perfectly clear that you don't ask a District Court, however highly regarded, to overrule a decision of the Supreme Court of the United States.

Your Honor, we were presented, immediately before Mr. Stern's argument, with a brief and I have not had a chance to look at it yet. I would like to have the opportunity to do so, your Honor.

The Court: And the proposed order?

Mr. Lipson: No, no, your Honor, not the proposed order, the brief. I have not had a chance to even glance at it, your Honor, and I would like to have an opportunity to do so and an opportunity to reply to it in kind.

The Court: Well, you will have that opportunity.

[fol. 1366] Mr. Lipson: Thank you, your Honor.

Essentially, then, your Honor, as we view it, the defendants seek to change the record in this case by adding material that was never incorporated in the record, since your Honor's own order limited the size and scope of the record on appeal.

But even passing that, even assuming that the pre-trial orders, as they were originally written in this Court, were to be entered in the record, we think that by no means should the language be changed nor should substantial

portions of that record be supplemented, especially when the supplement purports to state what the Government's position is, and the Government maintains that that is not its position.

Thank you, your Honor.

The Court: First of all, is counsel for the defendant aware that the order had not been entered in the form that it had been presented to counsel for the Government?

Mr. Stern: We were not acquainted with that until some weeks ago.

Mr. Braham: Just for the record, your Honor, that was our position also for Townsend Company.

The Court: You were under the impression that the [fol. 1367] order had been entered?

Mr. Braham: We were under the impression that it had been, when we got it, and at the time we received it most of the pre-trial steps had been taken and we had received the information which was to have been submitted to us.

The Court: At the time that that proposed pre-trial order, which had been circulated to counsel for all parties, there was no objection to it, in the form that it was in, am I correct, insofar as the Government's position is concerned?

Mr. Lipson: As it stood on January 15th, 1963?

The Court: You had no objection to it at that time?

Mr. Lipson: It was unobjectionable at that time.

The Court: And that was true as far as counsel for the defendants is concerned?

Mr. Braham: We submitted no objections at that time.

Mr. Stern: Yes.

The Court: The question is whether I would like to have you reserve whatever arguments you have on the question of whether or not I can supplement that order by the pro- [fol. 1368] posed language of paragraph seven on page four.

Mr. Stern: Our brief gives a few cases in support thereof, may it please the Court.

I think it was a stroke of fortune that the order was not entered, which makes it easier as a matter of procedure.

The Court: A stroke of fortune, what?

Mr. Stern: For the decision in this case as to all parties, in that the question presumably never would come up, has

come up subsequent to the determination of this case. I point this out to the Court that, never throughout the trial of this case, was there any suggestion—the case was submitted on the basis that there was no question of either the validity or propriety of the General Electric case.

We will stand or fall, may it please the Court, subject to the Court's power to enter this order, upon what did take place at that pre-trial conference, and from which the Court drew the suggested pre-trial orders.

Either the Government did or it did not state that it was going to question the doctrine in G.E.

Now, I am drawing your Honor's attention to the difference between "questioned the doctrine," or asking the Court to "overrule" the Supreme Court.

[fol. 1369] Accordingly, this case was tried throughout without any attempt in any manner to question the doctrine of G.E., but rather to distinguish it.

Now, it goes without saying that in the event that issue had been in this case, our presentation of the case might have been quite different. I don't say it would, I say it well might have been. We do not try issues that have been ruled out.

Accordingly, if this Court can and does determine that the agreement reached at pre-trial, in the narrowing of the issues, was as we have stated it to be, instead of, as I understand the Government states it to be, then I believe we are entitled to this order, and those distinctions are as follows:

If I understand counsel for the Government correctly, he admits that they agreed—they contended that this case was without the facts and circumstances and issues in G.E. In other words, it was distinguishable.

We say that the record shows, and we maintain that the facts are that they specifically stated more than was outside of it.

The Court: They stated it when?

Mr. Stern: In the pre-trial hearing, I believe on October 1, and they stated it in the presence of the Court, and from [fol. 1370] which the Court drew its proposed pre-trial order, that they specifically said that issue was out.

Now, if it is only that it is distinguishable, we maintain that there would be something to the Government's argu-

ment, but I think Mr. Lipson has forgotten the facts. And when he stated that the position, and I will use his words, he said that the position of the Government, that they did not advocate, that they didn't go as far as we say they went, we maintain it was entirely clear that they didn't say it was distinguishable alone, but that they said they had no contest of it.

Now, I used the word "contest" as against the word "overrule". I am not adding a great deal except that we have a valid question. This Court sought to narrow the issues and it did narrow the issues. Then at a later date, a contention that I am amazed that Mr. Lipson would even make, is now raised to the effect that they didn't do we now say they did.

STATEMENT ON BEHALF OF DEFENDANT, TOWNSEND AND COLLOQUY

Mr. Braham: May it please the Court, I have perhaps a slightly different recollection than perhaps Mr. Stern. I had made some notes during the pre-trial conference, and when this question was raised, I went back to those.

If your Honor will go back with me, perhaps your recol- [fol. 1371] lection can be refreshed as mine was. We had quite a long conference on the 1st of October, at which time Mr. Dickey went through the complaint section by section, asking the Government questions, and at that conference, towards the end, Mr. Pomeroy was asking certain questions he had and he asked the Government if the Government's position was that the G.E. case should be overruled?

My notes stated, on the question of the General Electric doctrine, "Is it the Government's position that the General Electric case is no longer good law?"

The Government answered in its brief, I think it was the brief they submitted in the criminal case, they set it out and they were taking the same position. But when we continued to press that, my notes indicate that one of the attorneys for the Government, and I do not know which, stated that he wished to check with his superior on whether General Electric case was good law, and my notes state that that statement was made by Mr. Esherick on the 15th of October, which would be two weeks later. We were scheduled to have a pre-trial in the criminal case, at which one

of the principal subjects to be discussed was the date on which the criminal case was to be tried, because that would affect the period of time which your Honor would set aside for the argument of the case.

[fol. 1372] Because we had the criminal pre-trial set for the 15th of October, your Honor directed us to stop back and made a very short amendment to the pre-trial, at which we could give your Honor the information with respect to the date of the trial, and my notes for that date, the 15th, indicate that one of the attorneys for the Government, and my notes don't show which, stated that there was going to be no attempt in this case to overrule the General Electric case. That is what it says.

Now, I would agree that they would not ask this Court to overrule the precedent in the Supreme Court, but the clear understanding of all parties, certainly all of the attorneys for the defendants, and the understanding of the attorneys for the defendants was that there was no question of the validity of the General Electric doctrine throughout this case, and that applied not only to the civil case, but in the criminal case, and the record to which Mr. Lipson referred, throughout.

In building the case, or building the defense, the first block that any one used was that the General Electric case was a valid doctrine.

The Court: Let me ask you this question: What is the significance of the addition of these words in the pre-trial order?

[fol. 1373] Mr. Braham: The Government is attempting in the Supreme Court to have the General Electric doctrine overruled, and it is our position that, in considering that question, the appellate court should have before it the entire record of the way in which the case was tried below.

We think that when the Government intends to question a particular precedent in a higher court, although it may not ask the lower court to take any position on it, if the lower court understands that a particular precedent is being questioned, which would be determinative of the issues, then the lower court may wish to decide it on the basis of that precedent and then say, "We understand that precedent is being questioned, and that our judgment would

be such and such, in the event that that precedent were not accurate."

In other words, to give the complete record in the lower court, the possibility that the controlling case may be overruled should be, it seems to me, woven into the entire fabric or framework of the action below so that that argument which is anticipated in the appellate court can be anticipated in the lower court, and any facts or evidence or documents which bear on that question, of whether the case should be overruled, can be made and presented in the lower court.

[fol. 1374] In that way, it seems to us, the lower court is then doing the job which it should do to aid an appellate court in a decision of whether in fact the precedent ought to be overruled.

So that Mr. Lipson says he thinks the Government's position is that the record should stand as it is, and it is our position that, without this modification to the pretrial order, the record would seem to show a case that was tried in a different way than it, in fact, was tried. We believe that throughout the entire history of this trial below, it was accepted that the Government was not attempting to question or have overruled the General Electric doctrine.

The Court: It is agreed that the position of the Government was that the facts of this case fall outside the facts in the General Electric Case. That much is agreed?

Mr. Braham: That much is agreed.

The Court: But it is your position further that the Government did not attempt to have the General Electric case overruled?

Mr. Braham: It seems to me that that is the primary position they had taken throughout. But, when you are preparing a case for trial, and you say:

> [fol. 1375] "What happens if the Court finds that the facts don't fall outside the General Electric?"

It seems to me that that is inherent in just stating the issue that the Government has stated.

Suppose that this Court finds that the facts are not outside the General Electric, or that they are within the General Electric, and it is our position that at that point

the Government said, "Well, in this case we do not intend to attempt to overrule the General Electric case." We believe that is stated by Government counsel. It is the recollection of defense counsel that that statement was made in the presence of your Honor in chambers at the pre-trial conference on the 15th of October.

The Court: I would like to ask counsel for the Government whether he agrees with counsel for the defendants version of what transpired at the pre-trial hearing before this Court on October 15, 1963? I believe that was the date, was it not?

Mr. Stern: I would like to correct my statement. I answered the Court "October 1," but that October 15 is correct.

Mr. Lipson: Your Honor, my understanding——

The Court: (Interposing) The reason I am asking that [fol. 1376] is this: If there will be a pre-trial order, I want to have it reflect exactly what did occur on that date.

Mr. Lipson: Your Honor, my personal recollection of that conference is that the Government was requested to state what its position would be with respect to General Electric and I recall that Government counsel had a difficult time answering the question because the object was not to prejudice any attempt that the Government might conceivably make in the future to overrule the case, but at the same time to make it clear to the Court that this case that was being tried before your Honor was being tried on the theory that this case was different from the General Electric case in the sense that restraints of trade alleged here were far more clear than those permitted by the General Electric doctrine.

The Court: I understand that. Then there is no question about the fact that the Government's position was that the facts here are different. But was there any statement made at that time that the Government is not attempting to have the doctrine in the General Electric case overruled?

Mr. Lipson: If such a statement was made, it was only made in the context of the Government's position in the trial in this Court.

[fol. 1377] The Court: The reason I say that is because I want to call upon Miss Stack, my law clerk, who pre-

pared the notes at the time of the pre-trial hearing, and I have just gone over these notes and I want to ask her whether her memory as to what transpired conforms with what my recollection seems to be.

Mr. Lipson: Your Honor, may I make one additional comment?

The Court: Yes.

Mr. Lipson: Your Honor, it is a long time since the pre-trial conference occurred. It is about a year and a half later. As we have already seen this morning, Mr. Stern's memory is not quite the same, and Mr. Braham's memory and my own.

The Court: And my memory is the weakest of all, I will say.

Mr. Lipson: You work harder than all of us.

The Court: That may be it or there may be other reasons, but I am sure I don't want to rely on my own memory as to what transpired.

Mr. Lipson: Your Honor, I think we can rely on the fact that when this draft pre-trial order was circulated, at that time memory of all counsel was fresh on the point, cer-
[fol. 1378] tainly fresher than it is now, and if at that time the pre-trial order did not correctly reflect the agreements between counsel, I think at that time it was incumbent upon counsel to make whatever changes and corrections, so that the matter could be straightened out definitely.

The Court: I will ask Miss Stack who is my law clerk, and who was my law clerk at that time, and who prepared the notes upon which the pre-trial order was based, and I want her to read from her notes.

Miss Stack: At that time counsel——

The Court: (Interposing) What date are you reading from?

Miss Stack: On the 15th of October, when counsel were to report——

The Court: (Interposing) Are you reading from your notes?

Miss Stack: I am reading from my notes that I keep on every pre-trial conference.

The Court: That you made on that date?

Miss Stack: That I made on that date. They reported

on the 15th of October, on the applicability of the General Electric case, and my notes on that are that:

> "The Government is not attempting to have doctrine [fol 1379] set in General Electric case overruled. It says only that facts in this case do not fall within that doctrine; the doctrine is still good law but does not apply as acts in this case are illegal without application of the doctrine, and that they will write a letter by December 29th."

The Court: Those were the notes you made immediately after the conference?

Miss Stack: That is right.

The Court: Gentlemen, my recollection, regardless of what should be done today, is that that substantially states the contents of the meeting we had on October 15th.

Do any of you wish to be heard further as to Miss Stack's statement as to what transpired on October 15th? She has read from her notes which I have before me of the meeting of that day?

Mr. Lipson: Your Honor, may I be heard?

The Court: Yes.

Mr. Lipson: I think the statement Miss Stack read, and I certainly won't challenge it, can only be understood in the context of what kind of trial we were going to have in this case.

[fol. 1380] The problem that I see is that the defendants want to extend whatever statement appears there, and that the Government may be able to argue in the Supreme Court, but I think that is wholly outside the context of any discussion that was had at the pre-trial conference.

I don't think the defendants are prejudiced in the matter because, unlike a question of fact, where I will concede readily that they might be prejudiced if the Government changes its position, or advocates a theory it did not advocate below, but this is purely and strictly a question of law, and it is clear, for example, that, should we have omitted the citation of a relevant case in the District Court, clearly that citation could have been made to the Supreme Court. We do not determine at the trial level what issues or arguments will be raised at the Supreme Court. That is a function of the Solicitor General, and I am under

his control, and I have no control as to what the Solicitor General does in the Supreme Court. He is an independent functionary of the Government, in a sense. If he chooses to argue the General Electric case above, that is his determination. So, whatever statement we could make at the pre-trial conference, your Honor, are relevant only in the sense that this trial is to be governed, the argument to be made in the course of this trial.

[fol. 1381] As was said previously, it would have been presumptuous for us to say, "Yes, your Honor, we hope you will overrule the General Electric case."

Suppose your Honor did do so? What would it have meant? There would have just been a great question mark on the lower courts even though they disapproved the Supreme Court, they still have a certain obligation to follow them through until they are overruled by competent authority.

Mr. Stern: Your Honor, I would like to reply briefly. Obviously, we are satisfied with Miss Stack's undoubtedly accurate relation of what took place.

On the last point raised by counsel, may I point out to the Court that, whereas he talked about a District Court being unable, as he puts it, to overrule a United States Supreme Court, I believe that we as lawyers, and occasionally judges, do the same, talk rather blithely about overruling. There are all types of overruling. There is a slice off of the full impact of a case, there is most of the case out the window, and sometimes there is all of it.

May it please the Court, on a normal basis an appellate court takes those questions only which were fairly raised and considered in the lower court. But if we consider [fol. 1382] here that this case was tried upon an assumption that I say those notes show firmly, that the least this Court can do to assist, in my opinion, is to follow the issues that were raised in this case, which the Court did. And if the pre-trial order as proposed accurately sets forth what Miss Stack says took place, we do ask that it be entered.

Mr. Braham: May I make just two short statements?

The first of these, there has been some statements by counsel for the Government that we did not make any reply to the draft or form of order suggested in January of 1963. We did not because we could not concede that the

Government would go back on statements that it had made in the pre-trial conference. We believe that when they said they did not intend to overrule the General Electric case, that that would continue to be their position throughout the trial.

Secondly, as I sat there, I wondered whether we were in the District Court or in the Supreme Court when we were talking about the power of the Court to overrule the precedent of the Supreme Court. That is an argument properly presented to the Supreme Court.

All we are doing here is asking this Court to submit as [fol. 1383] its record of the proceedings, what actually transpired. This Court need not face the question of whether it could overrule the Supreme Court precedent, whether the Government could bind the Solicitor General. The government—it is always very useful to have two branches of the Government, and so one cannot prejudice the other when it is useful.

All we are asking is that this Court set forth in the pre-trial orders what actually occurred. After that the Government may present some of the arguments which we have heard this morning to the Supreme Court, which has the ultimate decision of deciding whether or not that statement of the Government is binding at a later date. But at this point we merely ask that the pre-trial orders which we are asking be entered here should set forth the positions which were taken by both parties prior to the trial, during, and throughout the trial.

The Court: Gentlemen, the thought that occurs to me is this. We really are dealing with two problems here.

One, the entry of an order which both sides evidently felt was entered, should have been entered, but for some reasons, was not.

The Government, as I understand its position, does not wish to say that it consents to have such order entered, [fol. 1384] but does not have any real serious opposition to it.

Am I stating the position of the Government with regard to the original order, in the original form it was in?

Mr. Lipson: Your Honor, our serious objection is to the change in it. You are correctly stating the position.

The Court: Yes, I will deal with that later.

Am I correct in saying that if the order were entered in the original form in which it was circulated to counsel, there would have been no serious objection on the part of the Government in that form?

Mr. Lipson: That is correct, your Honor.

The Court: The thought that occurs to me is that maybe it would be proper to have the order entered first in the form that it had been circulated, and the form in which it presumably had been agreed upon, and then that there be a separate supplemental order citing the facts as reported by Miss Stack, the law clerk, who reported the incident, and it is the recollection that I have as to what transpired, have the supplemental order recite merely what her notes indicate took place and have the letter of October 30th [fol. 1385] which followed it attached thereto, so you would have two separate orders. One, presumably, to which there is no objection, and the other one which you could probably question if either one of you wanted to question in the other court afterwards.

I would like to ask the Government what is its position on that?

Mr. Lipson: Your Honor, we are put in a strange position of arguing what would have been the case "if". I can only assume now that if the material incorporated in Miss Stack's notes was in fact incorporated in the pre-trial orders, the Government would have made some attempt, I feel certain, to modify the language to such a point that there would be no assumption that we are not going to challenge General Electric.

To the extent that Miss Stack's notes are therefore subject to a supplemental order of this Court, I would request permission of your Honor to incorporate any objections that the Government has to those notes. Those notes were Miss Stack's notes. The Government has never seen them, has never had a chance to examine them, or rely on them, but did examine and rely on the pre-trial orders which it thought were in effect.

The Court: I will not enter any order today. I will give you [fol. 1386] an opportunity to first of all answer the brief. I have tried to figure out how to handle this and the thought did occur to me whether I have any authority to enter such an order at this time.

Does the defendant feel the Court has authority to enter such orders without any remand for corrections?

Mr. Stern: Yes, your Honor, under the cases cited in our brief.

The Court: Do you feel we have that authority?

Mr. Lipson: Your Honor, I would like to have an opportunity to review the defendants' brief and the cases they have cited on that point.

Mr. Braham: Just a couple of words.

Your Honor made some reference to "remand."

The Court: I was just asking whether or not there is any authority in support of entering any such order, or any supplemental order?

Mr. Braham: It is our understanding of the general law, which has been in existence for many, many years, is that the lower court has control over the contents of its record, so long as that record is in the possession of its Clerk.

Whether or not a notice of appeal has been filed to an appellate court, there are even cases which go so far [fol. 1387] as to say that, after the record has been transmitted to the appellate court, if there are questions about the record which the appellate court wishes to have answered, it will send the record back to the lower court in order that the lower court may act on motions with respect to the correctness of the record.

So that it is our position, as set forth in the brief, that this court has the inherent power to control the contents of the record of proceedings before it, despite the fact that a notice of appeal has been taken. Certainly, so long as the record is in the possession of the Clerk for the Eastern District of Michigan.

The Court: What is your position to the suggestion that I make, that the first pre-trial order be entered in the form it had originally been made, and that there be a supplemental order with the additions, to comply or to agree with the notes that had been prepared by my law clerk at the time of the pre-trial hearing, and which seem to confirm my memory as to what happened?

Mr. Braham: Speaking for the Defendant Townsend Company, that procedure would be satisfactory to us because it would satisfy our major problem, and that is,

we feel the record does not disclose what actualy occurred, so that the procedure would be perfectly satisfactory to [fol. 1388] the Defendant Townsend.

Mr. Stern: Speaking for the Defendant Hick, we are entirely agreeable to that, and since the Court has authority to do that we urge that it be so done.

The Court: I don't suppose the Governmen wishes to make a statement as to its position at this tine on that until it has an opportunity to answer the brief. But I would like you to bear in mind that it would seem to me that that would be the best way to handle the situation, have separate orders.

Mr. Lipson: Without committing ourselves, your Honor, I think that certainly if the pre-trial orders are going to be entered, they are going to be entered in the present form, in the form that counsel assumed they existed prior to trial, and that any changes should certainly be kept separate from the initial orders themselves, and to that extent I certainly agree with you.

The Court: In other words, if the Court feds that the position of the defendants is well taken, that that be made in a supplemental pre-trial order?

Mr. Lipson: To the extent that any additions or supplements be made, they should be made separately from the initial original order.

The Court: How much time do you need to reply to [fol. 1389] the defendants' brief?

Mr. Lipson: I don't know, your Honor. As I have said, I have not had a chance to look at it, but I imagine a two week period would probably be enough.

The Court: I was going to suggest that it is not quite as extensive as the brief you filed prior to the trial of the case here. So two weeks will be satisfactory.

What about the defendants? Do they wish additional time?

Mr. Stern: We would like about ten days, because of the transmittal between here and Washington, it is not as quick as if we were here.

The Court: Very well. I will give you two weeks to answer.

Now, do you gentlemen want to appear again in Court, or do you want to have the matters submitted on briefs?

Mr. Stern: I think the matter is narrowed to a point where it would be unnecessary to appear, unless the Court feels we would be of help by appearing here. I would be against it.

The Court: Is that your position also, Mr. Lipson?

Mr. Lipson: Your Honor, I see no present reason why [fol. 1390] additional oral argument would be required. Again I must speak from ignorance because I have not read the arguments that the defendants are making in their brief.

The Court: All right, unless I hear from parties, there will be no additional oral arguments. If either party feels additional oral arguments are necessary, they will let me know, and I will get in touch with counsel.

Mr. Stern: Thank you.

Mr. Lipson: Thank you, your Honor.

The Court: All right, the matter will be marked heard and submitted.

(End of hearing.)

[fol. 1391] Reporter's Certificate to foregoing transcript omitted in printing.

[fol. 1392] [File endorsement omitted]

IN THE UNITED STATES DISTRICT COURT FOR THE EASTERN DISTRICT OF MICHIGAN SOUTHERN DIVISION

[Title omitted]

Civil Action No. 21791

ORDER EXTENDING TIME—July 8, 1964

Upon motion of plaintiff-appellant United States of America, defendants-appellees consenting thereto, it is hereby ordered that the time for the appellant to docket this case on appeal and to file a jurisdictional statement in the Supreme Court of the United States shall be extended for a period of 30 days, i.e., until August 26, 1964.

Thaddeus M. Machrowicz, United States District Judge.

Dated: July 8, 1964.

[fol. 1393] [File endorsement omitted]

IN THE UNITED STATES DISTRICT COURT FOR THE EASTERN DISTRICT OF MICHIGAN, SOUTHERN DIVISION

Civil Action No. 21791

UNITED STATES OF AMERICA, Plaintiff,

v.

HUCK MANUFACTURING COMPANY AND TOWNSEND CO., Defendants.

ORDER TO ENTER FINAL JUDGMENT NUNC PRO TUNC—July 17, 1964

On February 28, 1964, Findings of Fact and Conclusions of Law upon Dismissal Under Rule 41(b) of the Federal Rules of Civil Procedure were entered in the above entitled action including and concluding in the order

> "It is Therefore Ordered that judgment be entered herein against the plaintiff dismissing the action and the Complaint filed herein."

Pursuant to Rule 58 of the Federal Rules of Civil Procedure and under this separate document

> It is Therefore ordered Nunc Pro Tunc that judgment be entered herein against the plaintiff as of February 28, 1964, dismissing the action and the complaints filed herein.

Thaddeus M. Machrowicz, U. S. District Judge.

Dated at Detroit, Michigan this 17 day of July, 1964.

[fol. 1394] [File endorsement omitted]

IN THE UNITED STATES DISTRICT COURT FOR THE EASTERN DISTRICT OF MICHIGAN, SOUTHERN DIVISION

Civil Action No. 21791

[Title omitted]

NOTICE OF APPEAL TO THE SUPREME COURT OF THE UNITED STATES—Filed August 13, 1964

I. Notice is hereby given that the plaintiff, the United States of America, hereby appeals to the Supreme Court of the United States from the judgment dismissing this action entered on July 17, 1964, *nunc pro tunc* as of February 28, 1964.

This appeal is taken pursuant to 15 U.S.C. 29.

II. The Clerk will please prepare a transcript of the record for transmission to the Clerk of the Supreme Court of the United States, and include therein the entire record before the district court, including all papers filed with the Clerk of the court in this proceeding and this Notice of Appeal.

III. The Questions Presented:

1. Whether the decision in *United States* v. *General Electric Co.*, 272 U.S. 476, insofar as it holds that an agreement between a patent owner and its licensee that the licensee will sell the patented product only at prices established by the patentee does not violate Section 1 of the Sherman Act, should be overruled.

2. Whether, in any event, an agreement by which a patentee undertakes not to grant any other unrestricted licenses upon condition that its sole licensee would follow the patentee's prices, violates Section 1 of the Sherman Act.

/s/ Arthur J. Murphy, Jr., Attorney, Department of Justice, Washington, D.C. 20530. /s/ Lawrence Gubow, United States Attorney.

[fol. 1395] [File endorsement omitted]

IN THE UNITED STATES DISTRICT COURT, EASTERN DISTRICT OF MICHIGAN, SOUTHERN DIVISION

Civil Action No. 21791

UNITED STATES OF AMERICA, Plaintiff,

vs.

HUCK MANUFACTURING COMPANY, INC., AND TOWNSEND CO., Defendants.

PRE-TRIAL ORDER—August 19, 1964

Present: Honorable Thaddeus M. Machrowicz, U.S. District Judge.

Pursuant to notice a pre-trial hearing was held in the above matter on October 1, 1962. Parties to this action were represented at the hearing by the following counsel:

The Government—by Charles R. Esherick and Jaek Louis Lipson, Department of Justice, Anti-Trust Division, Washington, D. C.

Defendant Huck Manufacturing Co., Inc.—by Arthur W. Dickey, John C. Sterritt, and Albert M. Stern; and

Defendant Townsend Co.—by Thomas W. Pomeroy, Jr., Samuel K. McCune, W. Walter Braham, Jr., and W. Gerald Warren.

A motion to admit defendants' out-of-state counsel to practice in this Court, for the purposes of this case only, was made and granted.

The complaint filed in this case charges defendants with a conspiracy to violate the Sherman Anti-Trust Act. Defendants deny the existence of any conspiracy and deny violation of the Act in any respect.

No amendments to pleadings are contemplated by either side.

A criminal prosecution, based on charges which gave rise to the instant case, is presently pending before another [fol. 1396] Judge of this Court, but not all counsel who appear in this case are involved in the criminal proceeding.

Documents which will be introduced in evidence in the criminal case will also be used as exhibits in the present suit. A list of such documents will be furnished by the Government to defendants.

Although it is expected that proof in the civil and criminal cases will be similar, the Government is not obligated and does not intend to limit its proof in this case to the same evidence that it intends to produce in connection with the criminal litigation. Evidence in addition to that introduced in the criminal case may be introduced in this case and not all evidence expected to be introduced in the criminal case need be introduced in this case.

Discovery will be extensive unless information counsel expect to elicit upon discovery is voluntarily submitted. To this end, questions which defense counsel intended to include in proposed interrogatories were discussed and information was voluntarily offered by Government counsel in answer to some of the questions. As to the remaining questions defense counsel were advised to proceed by filing interrogatories or by motion.

The only facts defendants concede at this time are those admitted in pleadings on file.

Government counsel advised opposing counsel that they will submit proof in support of charging allegations contained in paragraphs 14, 15 and 16 of the complaint but will offer no independent proof as to allegations of paragraph 17, although proof on the charging allegations may also incidentally refer to allegations of paragraph 17 as to alleged effects of the conspiracy charged. It is the Government's position that proof of the conspiracy establishes the natural effects of the conspiracy and that it is not incum- [fol. 1397] bent upon the Government to present independent proof as to effects of the conspiracy in an action of this type.

Defendants requested from the Government a list of its proposed witnesses at the trial with identification of the allegations in the complaint as to which each witness will testify. Government counsel agreed to furnish the list of proposed witnesses, without being limited to such witnesses only and without being bound to call each witness on the list; they objected to giving the gist of the testimony of each proposed witness.

As a result of the discussions between counsel, and in response to direct questions at the pre-trial hearing, Government counsel offered the following information to defense counsel to aid them in preparation for trial:

1. The Government makes no claim of invalidity of patents to which reference is made in paragraphs 14, 15 and 16 of the complaint;

2. The Government will rely upon the written agreements mentioned in the complaint as the licensing agreements which formed a part of the alleged conspiracy;

3. Validity of the written agreements themselves will be challenged insofar as they form a part of an alleged over-all agreement constituting a conspiracy to violate the Act, it being the claim of the Government that the written agreements are tainted by the illegality of the over-all agreement;

4. The Government relies not only upon the alleged oral agreement reached at a secret meeting mentioned in the complaint, but upon oral instructions given on other occasions in modification, alteration, extension, etc., of the original oral agreement;

5. Only one conspiracy is charged by the Government. The Government will rely upon the agreement described in paragraph 16-b of the complaint, as the basic agreement, but it may also introduce independent evidence of meetings of defendants' officers to establish existence of the alleged conspiracy;

6. Counsel for the Government were not ready to state whether they will rely solely upon the alleged agreement to fix prices and to limit licensing, but after a [fol. 1398] re-study of the facts they will advise defendants whether additional claims will be made in support of allegations as to existence of a conspiracy;

7. The Government is proceeding on the same theory of law in this case as it has advanced in the criminal case, which has been discussed in briefs submitted in the criminal case. After a re-study of the facts it will advise defendants of its position as to applicability of

the General Electric case decision, if any, to this case. On October 15, reporting on the applicability of the General Electric case, the Government stated that it is not attempting to have the doctrine set in the General Electric case overruled and stated only that facts in this case do not fall within that doctrine; that the doctrine is still good law but does not apply as the actions in this case are illegal without application of the doctrine; and that it will write a letter by December 29, describing in what way the facts of this case differ from the facts of the General Electric case. A copy of the letter to the Court, dated October 30, 1962, from the Assistant Attorney General of the United States, Antitrust Division of the Department of Justice, is attached hereto and made a part hereof."

8. The Government's prayer for relief will be stated in more specific terms after narrowing of the issues involved, in advance of trial.

9. Counsel agreed to confer immediately upon conclusion of a pre-trial hearing in the criminal case scheduled for October 15, 1962, with reference to matters discussed at this hearing and particularly as to information to be submitted by the Government as covered by sub-sections 3, 6 and 7 of this pre-trial order.

Government counsel agreed to submit to defendants, by not later than December 15, 1962, a list of firms which were regarded as qualified manufacturers of lockbolts and lockbolt parts, as well as a list of patents (identifying them by number) which the Government claims had their authorized monopolies extended beyond the scope permitted by law.

Since the pre-trial hearing counsel reported that the criminal trial has been set for February 19, 1963. It was agreed that all discovery proceedings shall be suspended for a period of two (2) weeks in advance of the criminal trial and during the progress of the trial.

[fol. 1399] Government counsel also advised the Court and opposing counsel of its position that facts in the instant case do not fall within the category of cases to which the doctrine expressed in the General Electric de-

cision applies, and that the acts complained of in suit are illegal without application of that doctrine.

On the basis of the pre-trial discussions, agreements reached between counsel, and directives of the Court,

It Is Ordered:

1. Thomas W. Pomeroy, Jr., Samuel K. McCune, and W. Walter Braham, Jr., all of Pittsburgh, Pennsylvania, are admitted to practice in this Court, for purposes of this case only.

2. Plaintiff shall submit to the Court and to the defendants, before the date of the adjourned pre-trial hearing, a list of documents which it proposes to submit in evidence at the trial.

3. Counsel shall report to the Court at the adjourned pre-trial hearing on the progress made toward completion of discovery.

4. The pre-trial hearing is continued to December 21, 1962 at 3:00 P.M.

/s/ Thaddeus M. Machrowicz, U.S. District Judge.

[fol. 1400] [File endorsement omitted]

IN THE UNITED STATES DISTRICT COURT FOR THE EASTERN DISTRICT OF MICHIGAN, SOUTHERN DIVISION

Civil Action No. 21791

UNITED STATES OF AMERICA, Plaintiff,

vs.

HUCK MANUFACTURING COMPANY, AND TOWNSEND COMPANY, Defendants.

SECOND PRE-TRIAL ORDER—August 19, 1964

At a session of said Court, held in the City of Detroit, Michigan, in the Federal Building, on the 19th day of August, 1964

Present: Honorable Thaddeus M. Machrowicz, U.S. District Judge.

At an adjourned pre-trial hearing held in this matter on December 21, 1962, the parties were represented by counsel of record.

Pursuant to agreement reached at the first pre-trial hearing the Government filed a statement which includes a list of patent numbers relevant to this suit, a selected list of manufacturers of lockbolts and lockbolt parts it deems qualified, and a list of its proposed witnesses.

The Government was requested by defendants to identify which of the manufacturers on the list were allegedly refused licenses and it agreed to make such identification, giving dates on which application for a license was made in each instance, if available.

A proposed list of defendants' witnesses was requested by the Government and defendants were directed by the Court to furnish such a list within the time limited therefor. Defendants will not be limited thereby and may call additional witnesses or refrain from calling any of the witnesses named on the list, if circumstances warrant it at the time of trial.

[fol. 1401] With reference to the list of allegedly qualified manufacturers the Government asked for defendants'

comments respecting qualification of such manufacturers; defendants agreed to do so within two (2) weeks from the date of the hearing and a statement to that effect is now on file.

Actual copies of documents included in proposed exhibits of the Government were furnished to defendants and a request was made at this hearing for admissions as to genuineness of such documents. Defendants were directed to admit or deny genuineness of each of such documents or to indicate lack of knowledge if genuineness was not admitted or denied. Since the pre-trial hearing defendants submitted lists of documents which each defendant admits are genuine.

The terms "substitutes for lockbolts" and "related products" are given in paragraphs 15-d and 16-c of the complaint. Defendants asked for information as to products, if any, the Government contends are included within those terms. Government counsel indicated that the paragraphs referred only to an agreement, not to a particular product, and if such terms were included in any alleged agreement it is not necessary to go beyond proof of such agreement. It was agreed, however, that if any particular products can be identified, the Government will advise defendants in advance of trial.

Paragraph 5 of the complaint defines the term "lockbolt". Defendants asked the Government to state whether the definition was intended to cover anything beyond the description in the patent and whether the Government has reference to the type of lockbolt illustrated in the appendix to the complaint except for differences in size, shape, material, etc. Government counsel agreed to review the file and to advise defendants whether the definition will be [fol. 1402] limited to the definition to the patents disclosed, whether reference will be made to additional patents, and whether the definition of lockbolts in the complaint will be amended.

The complaint charges that authorized monopolies of patents were extended beyond the scope permitted by law. Asked for a clarification of the scope, the Government stated its claim to be that the scope was extended beyond that permitted by law by the general conspiracy as alleged in the complaint.

At the first pre-trial hearing Government counsel advised that they will rely upon the written agreements mentioned in the complaint as the licensing agreements which formed a part of the alleged conspiracy. In view of alleged oral agreements reached at a secret meeting and subsequent oral alterations, amendments, extensions, etc. of such agreements on "other occasions", defendants asked in the event the Government intends to rely upon agreements other than those identified in the complaint as the licensing agreements forming a part of the alleged conspiracy, either oral or written, that it identify each and every such licensing agreement, giving dates, names of persons participating, place, and substance of the meeting or discussions on each of these occasions. The Government agreed to furnish dates, names of participants, and places at which such alleged agreements or modifications thereof were reached, and, to the extent it can do so, will give the substance of the meetings or discussions.

It is Therefore Ordered:

1. The Government shall furnish to defendants by February 10, 1963 a list of manufacturers of lockbolts and lockbolt parts who were allegedly refused licenses by defendants and approximate dates on which applications for licenses were made.

[fol. 1403] 2. Defendants shall submit to the Government by January 20th, 1963, a list of its proposed witnesses but shall not be limited to such witnesses if circumstances at the time of trial warrant production of additional witnesses or non-production of witnesses named on the list.

3. All other information which either side agreed, either at the first or second pre-trial hearing, to furnish to the other side, shall be submitted by February 10, 1963, unless reasons for non-production are given to the Court prior to that date. As to any additional requests upon which the parties cannot agree, they shall proceed in accordance with the rules.

/s/ Thaddeus M. Machrowicz, U.S. District Judge.

[fol. 1404] [File endorsement omitted]

IN THE UNITED STATES DISTRICT COURT FOR THE EASTERN DISTRICT OF MICHIGAN SOUTHERN DIVISION

Civil Action No. 21791

UNITED STATES OF AMERICA, Plaintiff,

vs.

HUCK MANUFACTURING COMPANY, INC., AND TOWNSEND CO., Defendants.

ORDER GRANTING DEFENDANTS' MOTION TO SUPPLEMENT RECORD—August 19, 1964

Present: Honorable Thaddeus M. Machrowicz, U.S. District Judge.

Defendants having filed a motion to supplement the record in this case, after notice of appeal by plaintiff was filed in this cause; and the Court having heard said motion and having considered arguments of counsel thereon made orally and in briefs submitted to this Court, and having filed its memorandum of reasons why such Motion should be granted,

It is Hereby Ordered

That defendants' motion to supplement the record in this cause, now on appeal in the Supreme Court of the United States, be and the same is hereby granted.

It is Further Ordered

That the record in this cause be supplemented by entering, as orders of this Court, a "Pre-Trial Order" and a "Second Pre-Trial Order" in the form attached to the motion to supplement the record.

/s/ Thaddeus M. Machrowicz, U.S. District Judge.

[fol. 1405] [File endorsement omitted]

IN THE UNITED STATES DISTRICT COURT, EASTERN DISTRICT OF MICHIGAN, SOUTHERN DIVISION

Civil Action No. 21791

UNITED STATES OF AMERICA, Plaintiff,

vs.

HUCK MANUFACTURING COMPANY, INC., AND TOWNSEND CO., Defendants.

MEMORANDUM OF ORDER GRANTING DEFENDANTS' MOTION TO SUPPLEMENT RECORD—August 19, 1964

Plaintiff filed a notice of appeal from a decision of this Court dismissing this action, reached on February 28th, 1964. Defendants thereafter filed a motion to supplement the record which is now before the Court.

The motion seeks to supplement the record by entering as orders of this Court two (2) pre-trial orders, in the form attached to the motion, and entitled "Pre-Trial Order" and "Second Pre-Trial Order". Defendants contend that entry of these orders to supplement the record is necessary in order that the record of proceedings truly disclose what occurred in this Court for the purpose of supplying a true, accurate and complete record for review on appeal.

Proposed pre-trial orders were drafted by the Court upon pre-trial hearings held on October 1, 1962 and December 21, 1962. Copies thereof were submitted to counsel of record for the purpose of indicating to the Court, prior to entry of such orders, whether they adequately state the position of each party and agreements of counsel as presented at the hearings. Considerable correspondence followed submission of the proposed orders to counsel but, since no express consent to their entry on the record appeared therein, the orders were not filed or entered on the record. Upon a hearing on the motion, both sides admitted a belief that the proposed orders, in the form submitted [fol. 1406] to them, were entered prior to the trial of this cause.

The forms of orders attached to the motion are identical with the proposed pre-trial orders with one exception. Defendants ask by their motion that additional provisions be added to the "Pre-Trial Order" as drafted by the Court.

The "Pre-Trial Order" recites the gist of discussions and agreements made in the course of the pre-trial hearing of October 1, 1962, in the following language:

> "Government counsel offered the following information to defense counsel to aid them in preparation for trial;
>
> • • • • • • •
>
> 7. The Government is proceeding on the same theory of law in this case as it has advanced in briefs submitted in the criminal case. After a re-study of the facts it will advise defendants of its position as to applicability of the General Electric case decision, if any, to this case.
>
> • • • • • • •
>
> 9. Counsel agreed to confer immediately upon conclusion of a pre-trial hearing in the criminal case scheduled for October 15th, 1962, with reference to matters discussed at this hearing and particularly as to information to be submitted by the Government as covered by sub-sections . . . . 7 of this pre-trial order.
>
> Government counsel also advised the Court and opposing counsel of its position that facts in the instant case do not fall within the category of cases to which the doctrine expressed in the General Electric decision applies, and that the acts complained of in suit are illegal without application of that doctrine."

A criminal prosecution, based on charges which gave rise to the instant case, was then pending in this jurisdiction. The General Electric case to which reference is made above is *United States* v. *General Electric Co.*, 272 U.S. 476.

The "Pre-Trial Order" provided for adjournment of the pre-trial hearing to December 21, 1962.

On October 1, 1962 counsel were requested to report to the Court on October 15th, immediately after the criminal case pre-trial, to advise whether a trial date had been set

so that trial schedules could also be arranged in the instant case. Counsel appeared pursuant to such request. At that [fol. 1407] time Government counsel reported that plaintiff is not attempting to have the doctrine of the General Electric case overruled, its contention in this case being that the facts herein do not fall within that doctrine; that while such doctrine is still good law, it is inapplicable here because acts alleged in this suit are illegal without application of the General Electric doctrine. The Government agreed to state its position in writing by December 29. A letter, dated October 30, 1962, commenting on the Government's position, was received by the Court and copies were furnished to opposing counsel. A copy of such letter is attached hereto.

A memorandum of this "Report" to the Court was entered on the same day in a record of proceedings kept in the office file of this case by the law-clerk of this Court who was present on this occasion.

It is the recital of the events which occurred on October 15th which defendant's motion asks to be added to the "Pre-Trial Order".

This Court has authority to supplement the record at this stage of the proceedings in order that such record truly disclose what occurred in the trial Court. Rule 75 (h), *Federal Rules of Civil Procedure;* 7 Moore's *Federal Practice,* § 75.15 (1). The Government does not challenge such authority nor does it object to entry in the record of the proposed pre-trial orders in the form as originally drafted by the Court. It emphatically objects, however, to any change in one of the orders as requested by defendants in their motion.

During arguments on the motion counsel for both sides agreed that the Court may consider separately (1) the request in the motion for supplementation of the record by adding thereto the two (2) proposed pre-trial orders, and (2) the request for additional provisions in the proposed order entitled "Pre-Trial Order".

[fol. 1408] There being no objection to grant of the motion in respect to the first request, the motion will be granted, subject to disposition of the second phase of the motion as to whether the "Pre-Trial Order" should be

entered on the record as originally drafted or with the changes proposed by defendant.

With regard to this second phase of the motion, the Government contends that the "Pre-Trial Order" as originally drafted by the Court fully, adequately and completely states the Government's position as to applicability, if any, of the General Electric doctrine to this case; that if statements attributed to it were made, they were intended only to convey the information that the General Electric case was not expressly overruled; that the question whether the Government would attack that decision was not and could not be reached in this Court; that it is not a relevant question for this Court's consideration; and that the Government at no time intended to foreclose any future attempts to have such doctrine overruled.

Defendants, on the other hand, argue that their preparation for trial and trial of the case proceeded on the theory that no attempt would be made to in any manner question the doctrine but only to distinguish this case on facts from the General Electric case. Defendants intimate that, had the issue been injected into this case prior to trial, they may have presented their case differently.

This Court makes no attempt to add to the findings of fact and conclusions of law previously filed, by interpreting the meaning of the statements made by Government counsel on October 15th, determining whether any prejudice resulted to defendants by reason of such statements, or whether such statements preclude plaintiff from attacking the validity of the General Electric decision on appeal in this case. It is the considered opinion of this Court, however, that such statements, with a recitation of the circumstances under which they were made, should be found in the record of the case when it is being considered on appeal. The interests of justice will best be served [fol. 1409] if a full and complete record of all proceedings in the trial Court is available to the appellate court upon its review of the case.

Specifically, the second request in the motion is for

addition of the following provision at the end of subsection 7, paragraph 2, page 4 of the "Pre-Trial Order":

> "On October 15, reporting on the applicability of the General Electric case, the Government stated that it is not attempting to have the doctrine set in the General Electric case overruled and stated only that facts in this case do not fall within that doctrine; that the doctrine is still good law but does not apply as the actions in this case are illegal without application of the doctrine; and that it will write a letter by December 29, describing in what way the facts of this case differ from the facts of the General Electric case. A copy of the letter to the Court, dated October 30, 1962, from the Assistant Attorney General of the United States, Antitrust Division of the Department of Justice, is attached here to and made a part hereof."

The requested addition to the "Pre-Trial Order" correctly relates events which occurred on October 15, 1962.. The "Pre-Trial Order" which will be added to the record of this case, under the ruling of this Court on the first phase of defendants' motion, should be changed accordingly, prior to filing.

For reasons stated herein, defendants' motion to supplement will be Granted and the record of this case will be supplemented in the manner as prayed for in the motion.

An order will be entered in accordance with the views expressed in this memorandum.

/s/Thaddeus M. Machrowicz, U.S. District Judge.

Dated at Detroit, Michigan this 19th day of August, 1964.

[fol. 1410] UNITED STATES DEPARTMENT OF JUSTICE
Washington, D.C.

LL:LB:CRE
60-126-47

October 30, 1962.

Honorable Thaddeus M. Machrowicz,
United States District Judge,
United States District Court for
the Eastern District of Michigan,
Federal Building,
Detroit 26, Michigan.

Re: United States v. Huck Manufacturing Company, Inc. and Townsend Company—Civil Action No. 21791

Dear Judge Machrowicz:

In the course of the pretrial conference held in your chambers on October 15, 1962 in the above-captioned case, counsel for defendant Townsend Company requested that the Government provide a statement describing in what way the facts of this case differ from the facts of *United States* v. *General Electric*, 272 U.S. 476 (1926).

In *United States* v. *General Electric* the relevant issue dealt only with the question of the validity under the Sherman Act of the price-fixing clause in a patent license agreement between a patentee and its licensee. The narrow decision in that case was that under those circumstances the price-fixing clause was legal. In the Supreme Court's more recent interpretation of that rule in *United States* v. *Line Material Company*, 333 U.S. 287 (1947), the limited nature of that *General Electric* ruling was emphasized and as the Supreme Court said:

> On the assumption *where a conspiracy to restrain trade or any effort to monopolize is not involved*, a patentee may license another to make and vend the patented device with the provision that the licensee's sale price shall be fixed by the patentee. (304) [Emphasis supplied]

Applying this rule to the facts of the *Line Material* case the Supreme Court proceeded to strike down an arrange-
[fol. 1411] ment by which two patentees had cross-licensed

each other and which arrangement also authorized one to fix prices under both patents. The Court characterized such an agreement as establishing an "intention to restrain." (312)

> Even where the agreements to fix prices are limited to a small number of patentees we are of the opinion that it crosses barriers erected by the Sherman Act against the restraint of trade though restraint is by patentee and their licensees. *(Ibid.)*

Since the date of the Line Material decision it has been held that mere price fixing, even when not coupled with any other restraints of trade, is nevertheless unlawful when incorporated in a series of patent licenses with substantially all manufacturers in an industry, *United States* v. *New Wrinkle, Inc.*, 342 U.S. 371 (1952), and even when incorporated in patent licenses with a mere plurality of firms in an industry, *Newburgh Moire Co.* v. *Superior Moire Co.*, 237 F. 2d 283-84, (3rd Cir. 1956).

The acts of defendants in this action fall within the prohibited area outlined in the foregoing cases. The complaint in this case charges defendants with having gone beyond a mere price-fixing arrangement. It charges that they have combined price fixing with a secret understanding not to license others and with further agreements to cross-license and grant back all future developments in the lockbolt field as part of a conspiracy to restrain trade and monopolize.

Moreover, on June 29, 1962, Honorable Fred W. Kaess, United States District Judge in this court in a companion criminal action to this captioned case *(United States* v. *Huck Manufacturing Company et al.*, Criminal No. 39017), ruled that the facts asserted in the indictment in that case—which are substantially identical to the facts asserted in the civil complaint in this case—fell outside the *General Electric* doctrine. Specifically, Judge Kaess stated:

> . . . [T]he defendants move to dismiss the indictment for not stating facts sufficient to constitute an offense against the United States. They rely chiefly upon the leading case of *United States* v. *General Electric Co.*, 272 U.S. 476. There, indeed, a price restriction was

upheld, but it must be recognized that not all price-restrictive licenses are valid. *United States* v. *Line Material Co.*, 333 U.S. 287; *United States* v. *United States Gypsum Co.*, 333 U.S. 364. Necessarily, the courts will look beyond the price restriction itself and consider the circumstances surrounding the exploitation of the patent. Experience counsels such an approach, for [fol. 1412] an agreement innocent when considered separately may be part of a plan condemned by the Sherman Act. Thus, the holder of a patent may not do as he pleases with the power granted him under the Patent Act, 35 USC § 154, but is subject in its exercise to the principles of the Sherman Act. Cf. *American Tobacco Co.* v. *United States;* 147 F. 2d 93, aff'd. 328 U.S. 781. See Furth, Price-Restrictive patent Licenses Under the Sherman Act, 71 Harv. L. Rev. 815.

Accordingly, we submit that the facts of this case fall outside the facts and law of *United States* v. *General Electric,* supra.

Sincerely yours, Lee Loevinger, Assistant Attorney General Antitrust Division, By: Charles R. Esherick, Attorney, Department of Justice.

cc: Thomas W. Pomeroy, Jr., Esquire, 1130 Oliver Building, Pittsburgh 22, Pennsylvania. Arthur W. Dickey, Esquire, 7-141 General Motors Building, Detroit 2, Michigan.

[fol. 1413] [File endorsement omitted]

IN THE UNITED STATES DISTRICT COURT FOR THE EASTERN DISTRICT OF MICHIGAN, SOUTHERN DIVISION

Civil Action No. 21791

[Title omitted]

ORDER EXTENDING TIME—August 21, 1964

Upon motion of plaintiff-appellant United States of America, defendants-appellees consenting thereto, it is hereby ordered that the time for the appellant to docket this case on appeal and to file a jurisdictional statement in the Supreme Court of the United States shall be extended for a period of 30 days, i. e., until September 25, 1964.

Thaddeus M. Machrowicz, United States District Judge.

Dated: Aug 21, 1964.

[fol. 1414] SUPREME COURT OF THE UNITED STATES, OCTOBER TERM, 1964

No. 538

UNITED STATES, Appellant,

v.

HUCK MANUFACTURING COMPANY, ET AL.

Appeal from the United States District Court for the Eastern District of Michigan.

ORDER NOTING PROBABLE JURISDICTION—January 18, 1965

The statement of jurisdiction in this case having been submitted and considered by the Court, probable jurisdiction is noted.

☆ U. S. GOVERNMENT PRINTING OFFICE: 1965 771185 788

INDEX

	Page
Opinion below	1
Jurisdiction	1
Questions presented	2
Statute involved	2
Statement	2
The questions are substantial	10
Conclusion	21
Appendix A—district court opinion	1a
Appendix B—district court judgment	31a
Appendix C—order granting motion to supplement record	32a

CITATIONS

Cases:

B. B. Chemical Co. v. *Ellis*, 314 U.S. 495	13, 14
Barber-Colman Co. v. *National Tool Co.*, 136 F. 2d 339	18
Blount Mfg. Co. v. *Yale & Towne Mfg. Co.*, 166 Fed. 555	20
Carbice Corporation of America v. *American Patents Development Corp.*, 283 U.S. 27	12
Colgrove v. *Green*, 64 F. Supp. 632	11
Cummer Graham Co. v. *Straight Side Basket Corp.*, 142 F. 2d 646	19
Douglas v. *Wisconsin Alumni Research Foundation*, 81 F. Supp. 167	11
Ethyl Gasoline Corp. v. *United States*, 309 U.S. 436	13
Graham v. *Brotherhood of Locomotive Firemen*, 338 U.S. 232	11
Henry v. *A. B. Dick Co.*, 224 U.S. 1	12
Hunt v. *Arnold*, 172 F. Supp. 847	11

Cases—Continued

	Page
International Business Machines Corp. v. *United States*, 298 U.S. 131	13
International Salt Co. v. *United States*, 332 U.S. 392	13
Kendall v. *Winsor*, 21 How. 322	14
Kiefer-Stewart Co. v. *Seagram & Sons*, 340 U.S. 211	11
Leeds & Catlin Co. v. *Victor Talking Machine Co.*, 213 U.S. 325	12
Leitch Mfg. Co. v. *Barber Co.*, 302 U.S. 458	13
Lichter Foundation, Inc. v. *Welsh*, 269 F. 2d 142	11
Mercoid Corp. v. *Mid-Continent Investment Co.*, 320 U.S. 661	12
Mercoid Corp. v. *Minneapolis-Honeywell Regulator Co.*, 320 U.S. 680	18
Morton Salt Co. v. *G. S. Suppiger Co.*, 314 U.S. 488	13
Motion Picture Patents Co. v. *Universal Film Mfg. Co.*, 243 U.S. 502	13
New Jersey Zinc Co. v. *Singmaster*, 4 F. Supp. 967, modified, 71 F. Supp. 277, certiorari denied, 293 U.S. 591	11
Simpson v. *Union Oil Co.*, 377 U.S. 13	17
Standard Sanitary Mfg. Co. v. *United States*, 226 U.S. 20	18
Travelers Mut. Casualty Co. v. *Skeer*, 24 F. Supp. 805	11
United States v. *Besser Manufacturing Company*, 96 F. Supp. 304, affirmed, 343 U.S. 444	20
United States v. *General Electric Co.*, 272 U.S. 476	10, 11, 13, 15, 17, 18, 19, 20
United States v. *General Electric Co.*, 82 F. Supp. 753	19

Cases—Continued

	Page
United States v. *General Electric Co.*, 80 F. Supp. 989	19
United States v. *Krasnov*, 143 F. Supp. 184, affirmed, 355 U.S. 5	20
United States v. *Line Material Co.*, 333 U.S. 287	10, 14, 16, 17, 18, 19
United States v. *Masonite Corp.*, 316 U.S. 265	17
United States v. *United States Gypsum Co.*, 340 U.S. 76	18
United States v. *United States Gypsum Co.*, 333 U.S. 364	17
United States v. *Univis Lens Co., Inc.*, 316 U.S. 241	14
United States v. *Vehicular Parking Ltd.*, 54 F. Supp. 828	18

Statutes and Rules:

Federal Rules of Civil Procedure:	
Rule 41(b)	4
Rule 58	2
Sherman Act, 26 Stat. 209, as amended, 50 Stat. 693, 69 Stat. 282, 15 U.S.C. 1, *et seq.*:	
Section 1	3, 4
Section 2	3, 4
35 U.S.C. 154	12

Miscellaneous:

Baker, *Patent Rights and the Antitrust Laws*, 34 J.P.O.S. 687 (1952)	18
Celler, *Patents and Monopoly*, 38 J.P.O.S. 425 (1956)	18
Clapp, *Some Recent Developments in Patent-Antitrust Law*, 36 Marquette L. Rev. 143 (1952); 34 J.P.O.S. 945	17
Diggins, *The Patent-Antitrust Problem*, 53 Mich. L. Rev. 1093 (1955)	17

Miscellaneous—Continued

	Page
Farley, *Price Fixing and Royalty Provisions in Patent Licenses*, 34 J.P.O.S. 46 (1952)	17
Hollabaugh, *Patents and Antitrust Laws*, 25 Univ. Cinc. L. Rev. 43 (1956)	17
Kligler, *Recent Judicial Limitation of the Patent License Contract*, 30 J.P.O.S. 685 (1948)	18
Mulford, *Special Problems in Licensing Patents in the United States*, 39 J.P.O.S. 395 (1957)	18
Swain, *Patents and Antitrust—Some Recent Developments*, 43 J.P.O.S. 251 (1961)	18
Wood, *Patent Combinations and the Anti-trust Laws*, 17 George Washington Law Review 59 (1948)	17
Wood and Johnson, *Patents and the Antitrust Laws*, Univ. Ill. L. Forum 544 (1950)	17

In the Supreme Court of the United States

OCTOBER TERM, 1964

No. —

UNITED STATES OF AMERICA, APPELLANT

v.

HUCK MANUFACTURING COMPANY AND TOWNSEND COMPANY

ON APPEAL FROM THE UNITED STATES DISTRICT COURT FOR THE EASTERN DISTRICT OF MICHIGAN, SOUTHERN DIVISION

JURISDICTIONAL STATEMENT

OPINION BELOW

The opinion of the district court, comprising its findings of fact and conclusions of law (Appendix A, *infra*), is reported at 227 F. Supp. 791.

JURISDICTION

The judgment of the district court was entered on July 17, 1964, *nunc pro tunc* as of February 28, 1964 (Appendix B). Notices of appeal were filed by the

United States on April 27, 1964, and on August 13, 1964.[1] The time for docketing the appeal was extended by the court below until September 25, 1964. The jurisdiction of this Court is conferred by Section 2 of the Expediting Act of February 11, 1903, 32 Stat. 823, as amended, 15 U.S.C. 29. *United States* v. *du Pont & Co.*, 353 U.S. 586; *United States* v. *Columbia Steel Co.*, 334 U.S. 495.

QUESTIONS PRESENTED

1. Whether this Court should overrule the holding in *United States* v. *General Electric Company*, 272 U.S. 476, that an agreement by which a patentee grants a license to make the patented article on condition that the licensee maintain its prices at a level set by the patentee, does not violate the Sherman Act.

2. Whether, even if *General Electric* is not overruled, an agreement by a patentee not to grant additional licenses as long as its licensee follows the prices which it sets, contravenes section 1 of the Sherman Act.

---

[1] Appellant erroneously believed that judgment pursuant to Rule 58, Federal Rules of Civil Procedure, had been entered by the court below on February 28, 1964, and filed its notice of appeal therefrom. After appellant learned, and pointed out to the court below, that in fact no such judgment had been entered, the district court, on July 17th, entered judgment *nunc pro tunc* as of February 28th. As a protective measure, the United States filed an additional notice of appeal on August 13, 1964.

STATUTE INVOLVED

Section 1 of the Sherman Act, 26 Stat. 209, as amended, 50 Stat. 693, 69 Stat. 282, 15 U.S.C. 1, provides in pertinent part:

> Every contract, combination in the form of trust or otherwise, or conspiracy, in restraint of trade or commerce among the several States, or with foreign nations, is declared to be illegal * * *.

STATEMENT

1. This is a direct appeal from a final judgment of the district court dismissing the government's civil antitrust suit against Huck Manufacturing Company ("Huck") and Townsend Company ("Townsend"). The complaint alleged that the two companies had violated Sections 1 and 2 of the Sherman Act by restraining trade and conspiring to monopolize the manufacture and sale of patented lockbolts,[2] which are metal fastening devices used principally in the construction of aircraft (Finding No. 7, App. 9a). The basic charge was that Huck (the patentee) and Townsend, its licensee, had agreed that Townsend would sell the patented products at the prices and on the terms and conditions fixed by Huck, and Huck would issue no additional licenses under its patents. An earlier criminal proceeding[3] involving the same

[2] Huck is the owner of United States Patents Nos. 2,531,048 and 2,531,049, dated November 21, 1950, covering lockbolts (Finding No. 10, App. 10a). The validity of these patents is not contested here.

[3] 214 F. Supp. 776.

charge, had been dismissed by another district judge at the conclusion of the government's case on the ground that the facts established did not constitute violations of Section 1 of the Sherman Act without evidence that the advantage acquired by the defendants as a result of their agreements was more than a normal and reasonable reward to a patentee.[4] The court did find, however, that the government had established, at least prima facie, that the parties had made an oral agreement under which Townsend would observe Huck's published prices and Huck would withhold further licenses. By stipulation of the parties the record in the criminal case was introduced into evidence as the government's case-in-chief in this civil action. On that record Judge Machrowicz granted defendants' motions to dismiss under Rule 41(b), Federal Rules of Civil Procedure (App. 30a).

Although the defense has not yet put in its case, Huck and Townsend vigorously deny the existence of the oral agreement to fix prices and maintain the exclusivity of Townsend's license.[5] The district court

[4] The allegation of a violation of Section 2 was also rejected, on the ground that the government "declined" to introduce proof of market structure. We are not challenging the district court's ruling on the Section 2 charge.

[5] While the district court refers, in Finding No. 16 (App. 15a), only to the "verbal agreement * * * which the Government contends was entered into," the last sentence of that same Finding appears to assume the existence of such oral concurrence:

"The verbal agreement was no more than the exercise by Huck of its right as the patent owner of the lockbolt patents to grant or extend an exclusive license to another (in this case, Townsend) for the unexpired term of those patents and

concluded that "upon the evidence submitted * * * the case at bar is in all material respects the same as and ruled by the decision in *U.S.* v. *General Electric Co.* * * * " (Conclusion VII, App. 28a). It further ruled that "there is no violation of the Sherman Act by Huck's establishment of the prices, terms and conditions of sale for the patented lockbolts and the following thereof by the licensee, Townsend, for it is established law under the *General Electric* case, that it is not a violation of the Sherman Act for a licensee to follow the prices, terms and conditions of sale of the patent owner, by agreement to do so" (Conclusion III, App. 26a).

2. The government's evidence established the following facts:

Huck manufactures lockbolts and sells them throughout the United States, primarily for use in aircraft construction (Findings Nos. 3, 7, App. 8a, 9a). Its domestic sales of that product in 1960 amounted to approximately $3½ million (GX–80). Townsend, which was a Pennsylvania corporation when this suit was filed, is now a division of Textron Industries, Inc., and manufactures lockbolts at plants in California and Pennsylvania (Findings Nos. 2, 4, App. 8a). Its lockbolt sales in 1960 were approximately $2,399,873 (GX–103).

In the latter part of 1950, appellee Townsend, without obtaining a license from Huck, began to manufac-

---

to require as a condition thereof that its licensee sell the patented lockbolts, which it could legally manufacture only under the license, upon the terms and conditions of sale and price established by Huck and the exercise by Townsend of its right to agree to and accept such a patent license."

744-912—64——2

ture and sell lockbolts in competition with Huck.[6] Soon afterward, Townsend decided that it should not risk a suit for patent infringement brought by Huck, which might invalidate the patents and open the field to other fastener manufacturers (GX–95); accordingly, it requested a lockbolt license from Huck. Refusing the request, Huck brought an action for infringement against Townsend. The district court found the patents to be valid and infringed by Townsend, and the latter filed a notice of appeal on May 27, 1953 (Finding No. 12, App. 10a); GX–25).

Despite its legal victory, Huck remained apprehensive about the existence of Townsend as a competitor, and particularly about the possibility that Townsend might develop a fastener that would serve the same purposes as a lockbolt but not infringe Huck's patents (Tr. 193, 509–510; GX–26, 27). Thus, when Townsend in 1953 again sought a license to manufacture and sell lockbolts, Huck gave the matter serious consideration. It made extensive analyses of the advantages and disadvantages of granting a license, noting, among other factors, that its position as the sole supplier of lockbolts placed it at a disadvantage in negotiating labor contracts; but, on the other hand, that unless there were price restrictions forbidding the licensee to sell appreciably below Huck's published prices the company could suffer badly in competition because of its high labor rates and other costs, and that Townsend appeared capable of pro-

[6] The Cherry Rivet Company, which merged with Townsend on January 1, 1951, actually began the manufacture of lockbolts prior to that date.

ducing and selling lockbolts at a price much lower than that of Huck (Tr. 192, 515; GX–27). Townsend, for its part, recognized that to receive a license from Huck would be more advantageous than to have the patents invalidated on appeal because, with Townsend as the sole licensee, the two companies would be able to control the lockbolt market and discourage potential competitors (Finding Nos. 12, 13, App. 10a, 11a; Tr. 876–77; GX–95).

Negotiations between the two companies, looking toward the grant of a license to Townsend, began in the spring or summer of 1954 (Tr. 199). During that period, at a meeting of the presidents of the two companies in the office of Huck's attorney in Detroit, there was a general discussion of the various provisions of the contemplated license. Royalties, patent validity, and licensing of improvements were all considered and tentative agreements reached as to each. In addition, the parties agreed that for a two-year period, Townsend would follow Huck's lockbolt prices and Huck would not license any other firms (Tr. 202–205). Toward the latter part of the meeting, the President of Townsend, Mr. Dickenson, asked the attorneys to leave the room, stating that the others wanted "to talk business" (Tr. 206).

The executives then continued negotiations. Mr. Dickenson stated that they all were aware that the proposed agreement did not satisfy either Townsend's desire for a license which would be exclusive for the life of the patents, or Huck's desire for a price maintenance provision covering the same period.

He therefore proposed "'a supplementary verbal agreement" whereby Townsend would observe Huck's published lockbolt prices during the life of the patents if Huck refrained from licensing potential competitors of Townsend (Tr. 211–212). Mr. Armour, President of Huck, accepted this proposal, promising, in turn, that Huck would not issue further licenses (except for lockbolts of a type which neither company wished to produce) so long as Townsend continued to adhere to Huck's prices (Finding No. 16, App. 15a; Tr. 212, 214, 217). Thus, in effect, the exclusive licensing and price maintenance provisions were extended by verbal agreement for the life of the patents.[7]

On September 14, 1954, Huck and Townsend exe-

[7] Testimony as to the making of the oral agreement was given by a government witness, Robert Looker. Looker, stepson of Louis Huck, inventor of the lockbolt, had been employed by Huck from 1947 until 1956, at which time he was Vice-President in Charge of Sales, and supervisor, in conjunction with the firm's attorneys, of Huck's patent matters (Tr. 189). After leaving Huck, Looker assumed the presidency of Brown-Line Corporation, which manufactured fastening devices for aircraft interiors, and unsuccessfully sought a license from Huck for lockbolts not manufactured by Huck (Tr. 408; GX–60). Brown-Line Corporation has subsequently filed an action against Huck and Townsend seeking treble damages for alleged violations of the Sherman Act.

Looker testified that he was present at the meeting which culminated in the verbal agreement described above (Tr. 199).

The court below indicated some dissatisfaction with Looker's testimony, on the basis of his interest in the outcome of the litigation and suggested some circumstantial inconsistencies in the testimony (Finding No. 15, App. 14a, 15a). But the court did not find that Looker's testimony was untruthful, and in the criminal trial Judge Kaess, who actually heard and saw the witness, found that the agreement was proved *prima facie* (214 F. Supp. at 777).

cuted a written license agreement (GX–17). Three days later they jointly stipulated to dismiss Townsend's appeal from the judgment in the infringement suit (Finding No. 12, App. 11a; GX–33). Under the written terms of this contract, which was to run for the life of the patents, at a stated royalty, Townsend granted a non-exclusive cross-license to Huck on any improvements on lockbolts developed or acquired by Townsend, as well as on lockbolt devices which were substitutes for Huck's lockbolts; Huck agreed to make its license to Townsend exclusive for the first two years, while Townsend agreed, during the same two-year period, not to sell below the prices on lockbolts set by Huck's published schedules (Finding No. 14, App. 11a–13a; GX–17).[8]

Since that time, as the court below found, Huck has granted no additional licenses for the manufacture and sale of the general line of lockbolts (Fdg. 22, App. 17a).[9] And Townsend has in fact maintained its prices substantially at the levels set by Huck (Fdg. 18, App. 15a, 16a).

---

[8] Subsequently, Huck and Townsend entered into further agreements to cross-license products related to lockbolts. These were the Lockbolt Stump License of 1955 (GX–19); the Blind Lockbolt License of 1958 (GX–72); the Lockbolt Installation Tool Cross License of 1958 (GX–70); and the Lockbolt Installation Tool Cross-Sales Agreement of 1958 (GX–71) (Finding No. 23, App. 17a, 18a).

[9] It has, however, granted two additional licenses to Pheoll Manufacturing Co. and Standard Pressed Steel Co. Both are limited to lockbolts made of titanium, a metal which neither Huck nor Townsend utilizes (Finding No. 22, App. 17a). The government's witness testified that licenses of that limited nature were not foreclosed by the oral agreement (Tr. 212).

THE QUESTIONS ARE SUBSTANTIAL

1. In *United States* v. *General Electric Company*, 272 U.S. 476, this Court in 1926 upheld the validity of an arrangement by which the patentee granted a license to make the patented article on condition that the licensee agreed to maintain its prices at a level set by the patentee. The Court ruled that such price-fixing was within the permissible scope of the patent monopoly because it was "normally and reasonably adapted to secure pecuniary reward for the patentee's monopoly" (p. 490), and therefore did not violate the Sherman Act. In the 1947 Term, the government urged that *General Electric* should be overruled, but an equally divided Court declined. *United States* v. *Line Material Co.*, 333 U.S. 287. The government's experience with the operation of the *General Electric* rule since that time has further convinced us of the unsoundness of that decision. In these circumstances, the government again urges the Court to re-examine *General Electric* and to overrule it.[10]

[10] The appellees will presumably argue that the government should not be permitted to urge the overruling of *General Electric* in this Court because it allegedly waived the issue below. That contention will be based upon the following circumstances:

Subsequent to entry of the judgment below and filing of the notice of appeal, the district court granted the defendants' motion to supplement the record by adding two pre-trial orders. These orders had been drafted by that court in 1962, submitted to counsel for suggestions, and signed by Judge Machrowicz, but (contrary to the belief of all counsel) had not been entered on the record. The government did not object to this much of the motion. In addition, at the request of defendants and over the government's objection, the district court added the following statement to one of the pretrial orders (see App. C, infra, pp. 32a–38a):

"On October 15, reporting on the applicability of the General Electric case, the Government stated that it is not attempting to have the doctrine set in the General Electric case over-

General Electric rested upon an erroneous view of the nature of the patent monopoly. The owner of a patent derives no more from his statutory grant

---

ruled and stated only that facts in this case do not fall within that doctrine; that the doctrine is still good law but does not apply as the actions in this case are illegal without application of the doctrine; and that it will write a letter by December 29, describing in what way the facts of this case differ from the facts of the General Electric case. A copy of the letter to the Court, dated October 30, 1962, from the Assistant Attorney General of the United States, Antitrust Division of the Department of Justice, is attached hereto and made a part hereof." The letter referred to by the court sets forth the government's reasons for believing that the facts of this case do not fall within the *General Electric* doctrine (see, *infra*, p. 39a).

This addition to the pre-trial order ought not preclude the plenary consideration by this Court of the important question whether *General Electric* should be overruled. See *Kiefer-Stewart Co.* v. *Seagram & Sons*, 340 U.S. 211; *Graham* v. *Brotherhood of Locomotive Firemen*, 338 U.S. 232, 237. The government's statement that it was not challenging *General Electric* must be interpreted in the light of the circumstances under which it was made. Viewed in that light, it merely expressed the obvious point that the government could not properly have urged the district court not to follow *General Electric*, let alone to "overrule" it. For until this Court has spoken, its outstanding decisions are undeniably binding upon the lower courts. *Lichter Foundation, Inc.* v. *Welch*, 269 F. 2d 142, 145 (C.A. 6); *Hunt* v. *Arnold*, 172 F. Supp. 847, 856 (N.D. Ga.); *Douglas* v. *Wisconsin Alumni Research Foundation*, 81 F. Supp. 167, 170 (N.D. Ill.); *Colegrove* v. *Green*, 64 F. Supp. 632, 634 (N.D. Ill.); *Travelers Mut. Casualty Co.* v. *Skeer*, 24 F. Supp. 805 (W.D. Mo.), appeal dismissed, 106 F. 2d 1017, 1018; *New Jersey Zinc Co.* v. *Singmaster*, 4 F. Supp. 967 (S.D.N.Y.), modified on other grounds 71 F. 2d 277 (C.A. 2), certiorari denied, 293 U.S. 591. Nor can it be argued that the appellees were prejudiced in the presentation of their defense by any belief that the government would not challenge the General Electric rule in this Court. Judgment below was entered on the appellees' motion to dismiss at the end of the government's case. Thus they have not yet had occasion to adduce evidence in support of their defenses.

than the right "to exclude others from making, using, or selling the invention throughout the United States" (35 U.S.C. 154). In return for a royalty, he may agree to waive that right of exclusion, permitting a licensee to manufacture the patented product free from the threat of an infringement suit. But nothing in the patent statute authorizes the patentee to demand, as an additional *quid pro quo* for waiving that right, a price-fixing agreement plainly prohibited by the anti-trust laws. In prescribing the terms and conditions on which he will refrain from enforcing his statutory monopoly, the patentee acts solely by virtue of his right as the owner of property to make contracts concerning that property; such a contract, like any other, is subject to the limitations imposed by the general law and is not exempted from those limitations by the patent statute. Cf. *Mercoid Corp.* v. *Mid-Continent Investment Co.*, 320 U.S. 661, 666.

In a closely related context, this Court has not hesitated to repudiate early decisions under which patentees were permitted to enlarge the scope of their monopoly by means of restrictive conditions (in the form of tying clauses) in patent license agreements. See *Motion Picture Patent Co.* v. *Universal Film Mfg. Co.*, 243 U.S. 502 (overruling *Henry* v. *A. B. Dick Co.*, 224 U.S. 1); *Carbice Corporation of America* v. *American Patents Development Corp.*, 283 U.S. 27 (sharply limiting *Leeds & Catlin Co.* v. *Victor Talking Machine Company*, 213 U.S. 325); *Mercoid Corp.* v. *Mid-Continent Investment Co.*, 320 U.S. 661. Today such restrictions, whether express or implied, and

whether the tied article is patented or unpatented violate both the patent and the antitrust laws.[11] The earlier decisions had proceeded upon the premise that, since the patentee had the right to withhold his invention altogether from public use, he must necessarily have the right to allow its use on whatever conditions he might see fit to impose. The defect of that reasoning, as exposed by the Court in *Motion Picture Patents Co., supra,* 243 U.S. at 514, is that it failed to "distinguish between the rights which are given to the inventor by the patent law and which he may assert against all the world through an infringement proceeding and rights which he may create for himself by private contract which, however, are subject to the rules of general as distinguished from those of the patent law." It is precisely the same fallacy which underlies the *General Electric* rule and calls for its overruling.

General Electric also runs counter to other basic precepts. The decision was premised on the view that "the patentee may grant a license * * * upon any condition the performance of which is reasonably within the reward which the patentee by the grant of the patent is entitled to secure" (272 U.S. at 489). A price-maintenance provision was deemed to be justified on this theory because of the danger that the

[11] See *Leitch Mfg. Co.* v. *Barber Co.*, 302 U.S. 458; *Ethyl Gasoline Corp.* v. *United States*, 309 U.S. 436; *International Business Machines Corp* v. *United States*, 298 U.S. 131; *Morton Salt Co.* v. *G. S. Suppiger Co.*, 314 U.S. 488; *B. B. Chemical Co.* v. *Ellis*, 314 U.S. 495; *International Salt Co.* v. *United States*, 332 U.S. 392.

744-912—64——3

patentee might otherwise be undersold and thus forced to reduce his own prices. This approach plainly makes "the inventor's reward the prime rather than an incidental object of the patent system" (*Line Material,* 333 U.S. at 318 (concurring opinion)). It is incompatible with the principles, announced by this Court in many other cases, that the rights granted by a patent must be confined "strictly to the terms of the statutory grant" (*United States* v. *Univis Lens Co., Inc.,* 316 U.S. 241, 251); that the patent monoply may not be enlarged merely because "it would be more convenient to the patentee to have it so, or because he cannot avail himself of its benefits within the limits of the grant" (*B. B. Chemical Company* v. *Ellis,* 314 U.S. 495, 498); and that "the benefit to the public or the community at large," rather than the advantage of the patentee, was "the primary object in granting and securing that monopoly" (*Kendall* v. *Winsor,* 21 How. 322, 328).

Nor is it true that the patentee must resort to price-fixing in order to be assured of a fair reward for his invention. Like any other property, a patent may be sold or assigned for what the market will pay. Its owner may refrain from licensing and reap his reward in the form of manufacturing profits. If, instead, he elects to license a rival producer, he can secure from the licensee as great a competitive advantage as the latter is willing to concede, simply by establishing a sufficiently high royalty. Each of these alternatives, however, unlike the instant price-fixing arrangement, leaves the value of the patented product to be decided in the marketplace. And even when the

licensee is burdened by a high royalty, the public may still receive the benefit of any superior efficiencies which enable him to overcome that handicap and to sell his output at a lower price than the patentee might wish to charge if not restrained by competition.

It is no answer to say that the patentee here (and in *General Electric*) did not seek to extend his monopoly to products not embraced within the terms of the patent grant. Even though that be true, the anticompetitive effects of the price-fixing arrangement, and the market power thereby acquired by the patentee, are much greater than those which flow from the patent alone. Seldom does the patent alone shield its owner from the competition of other firms in the same industry. The rivals may challenge the validity of the patent or seek to narrow its scope; they may attempt to develop patentable inventions of their own which would accomplish the same result by a different, and perhaps better, method; or they may place on the market an unpatented but noninfringing substitute at a price which makes it attractive despite the absence of the patented feature. True, the availability of a license from the patentee, even if not accompanied by a price-fixing agreement, may remove the incentive for these more venturesome forms of competition. But neither the patent nor the license alone forecloses the possibility of vigorous price competition among the licensees and between them and the patentee. It is only by virtue of a price-maintenance agreement of the type sanctioned by *General Electric* that this important competitive possibility is elimi-

nated and the patentee thereby enabled to control the price, not only of his own output, but of the output of his potential competitors as well. Mr. Justice Douglas summed up the matter in his concurring opinion in *Line Material* (333 U.S. at 319): [12]

> The patentee creates by that method a powerful inducement for the abandonment of competition, for the cessation of litigation concerning the validity of patents, for the acceptance of patents no matter how dubious, for the abandonment of research in the development of competing patents. Those who can get stabilized markets, assured margins, and freedom from price cutting will find a price-fixing license an attractive alternative to the more arduous methods of maintaining their competitive positions. Competition tends to become impaired not by reason of the public's preference for the patented article but because of the preference of competitors for price fixing and for the increased profits which that method of doing business promises.

---

[12] The anti-competitive consequences of the *General Electric* doctrine are well-illustrated by the present case. Here one of the principal considerations which induced Huck to offer the license was the fear that Townsend might "develop around" Huck's patents and thus lessen their value (GX 26, 27; Tr. 193, 509–510); the opportunity to share with Huck a sheltered market free from price competition made it unnecessary for Townsend to undertake such a development program. A further by-product of the restrictive licensing agreement was a stipulation dismissing the appeal which Townsend had filed from the adverse lower court decision in the infringement suit in which it had challenged the validity of the Huck patents (Fdg. No. 12, App. 11a; GX–33).

General Electric has long since ceased to be a vital precedent. Its scope has been narrowly confined by later decisions. See, *e.g.*, *United States* v. *Line Material Co.*, 333 U.S. 287; *United States* v. *United States Gypsum Co.*, 333 U.S. 364; *United States* v. *Masonite Corp.*, 316 U.S. 265. Cf. *Simpson* v. *Union Oil Co.*, 377 U.S. 13. Moreover, four of the eight Justices who participated in *Line Material* expressed the view that *General Electric*, even in its most limited formulation, was fundamentally incorrect and should be overruled. At that time, the Court was understandably reluctant to disturb business arrangements which had been "repeatedly, even though hesitatingly, made in reliance upon the contractor's interpretation of" *General Electric* and its antecedents (333 U.S. at 303). Today there is little ground for such solicitude. *Line Material* itself served notice upon the business community, and upon the members of the patent and antitrust bars, that *General Electric* was no longer a reliable precedent,[13] and numerous commentators have voiced doubts as to its continuing authority.[14] Since

[13] Indeed, Huck itself was aware of the doubtful authority of *General Electric* and expressed apprehension as to continued judicial approval of price-fixing in patent licenses (GX-27, first document, page 3).

[14] Wood, *Patent Combinations and the Anti-Trust Laws*, 17 George Washington Law Review 59 (1948); Diggins, *The Patent-Antitrust Problem*, 53 Mich. L. Rev. 1093 (1955); Wood and Johnson, *Patents and the Antitrust Laws*, Univ. Ill. L. Forum 544 (1950); Hollabaugh, *Patents and Antitrust Laws*, 25 Univ. Cinc. L. Rev. 43 (1956); Clapp, *Some Recent Developments in Patent-Antitrust Law*, 36 Marquette L. Rev. 143 (1952); 34 J.P.O.S. 945; Farley, *Price Fixing and Royalty Provisions in Patent Licenses*, 34 J.P.O.S. 46 (1952); Baker,

the statutory patent monopoly has a life of only 17 years, all license agreements entered into prior to *Line Material*, and thus in justifiable reliance upon *General Electric*, will have expired by 1965.[15]

In sum, *General Electric* is out of harmony with other decisions of this Court which consistently have invalidated other restrictive conditions in patent-licensing agreements. It has been a prolific source of confusion and uncertainty to business planners and has inspired a multitude of restrictive schemes which eventually were stricken down by the courts when challenged, but only after undoubted loss to the economy.[16]

Patent Rights and the Antitrust Laws, 34 J.P.O.S. 687 (1952); Swain, *Patents and Antitrust—Some Recent Developments*, 43 J.P.O.S. 251 (1961); Kligler, *Recent Judicial Limitation of the Patent License Contract*, 30 J.P.O.S. 685 (1948); Mulford, *Special Problems in Licensing Patents in the United States*, 39 J.P.O.S. 395 (1957); Celler, *Patents and Monopoly*, 38 J.P.O.S. 425 (1956).

[15] In this case, we seek only prospective relief, *i.e.*, an injunction against further enforcement of the restrictive conditions contained in the licensing agreement.

[16] The rule has been employed, for example, as a screen behind which whole industries have been regimented under price, quality, and other pervasive restraints. *United States* v. *United States Gypsum Co.*, 340 U.S. 76; *United States* v. *United States Gypsum Co.*, 333 U.S. 364; *United States* v. *Vehicular Parking, Ltd.*, 54 F. Supp. 828 (D. Del.), cf. *Standard Sanitary Mfg. Co.* v. *United States*, 226 U.S. 20. See, also, *Ethyl Gasoline Corp.* v. *United States*, 309 U.S. 436 (price control over one patented product used as a lever to control others); *Mercoid Corp.* v. *Minneapolis-Honeywell Regulator Co.*, 320 U.S. 680, 682–683 (patents upon a combination employed to fix prices on unpatented components); *Barber-Coleman Co.* v. *National Tool Co.*, 136 F. 2d 339 (C.A. 6); *Cum-*

We urge, therefore, that the Court reconsider this anomalous precedent and repudiate the rule it announced.

2. In the alternative, we submit that the agreement here in issue—whereby Huck bound itself not to grant any further unrestricted licenses so long as Townsend, its sole licensee, continued to observe Huck's prices—does not come within the purview of the *General Electric* rule and therefore violates the Sherman Act even if *General Electric* continues as a precedent. The holding in *General Electric* was merely that a patentee may exact a price maintenance agreement from his licensee in return for the privilege of making or using the patented article. Here, however, the price-fixing agreement was a *quid pro quo,* not merely for the right to produce the patented lockbolts, but

---

mer-Graham Co. v. *Straight Side Basket Corp.*, 142 F. 2d 646 (C.A. 5) (process patents sold to govern prices of unpatented products); *United States* v. *General Electric Co.*, 80 F. Supp. 989 (S.D. N.Y., 1948) (patent on the tips for cutting tools used to control the price of the entire tool); *United States* v. *Line Material Co.*, 333 U.S. 287 (effort by owners of complementary patents to join forces so as to permit one to fix the prices under both patents). General Electric itself so extended the privileges which it won in the 1926 decision that it was found, 23 years later, to have unlawfully monopolized the entire incandescent lamp industry by an intricate network of practices and agreements. Although "after 1933 * * * [General Electric] had no basic and controlling patents on the manufacture of incandescent electric lamps but only improvement patents on elements constituting the completed lamp, process and machine patents, many of which are not used," had been utilized to control the entire industry. *United States* v. *General Electric Co.*, 82 F. Supp. 753, 813 (D. N.J.). We suggest that the findings in the later *General Electric* case, which were not made until after this Court's decision in *Line Material*, point to the wisdom of eliminating the last vestiges of the 1926 decision.

also for the right to restrain the patentee from issuing further licenses.[17] This Court, recognizing the anticompetitive implications of the decision, has consistently given *General Electric* a minimal scope. (See, *supra,* p. 17.) In keeping with that approach, *General Electric* should not be held in the present case to legitimatize a license agreement in which price fixing is combined with a patentee's commitment not to deal with others, these restraints serving as reciprocal inducements. In sum, the present case presents yet another situation in which businessmen—relying, albeit hesitantly, upon *General Electric*—have adopted restrictions which go beyond the letter of that decision. The case thus provides not only a further occasion for limiting *General Electric,* but additional reason, if any were needed, for overruling it.

---

[17] Indeed, any agreement whereby the patentee surrenders his freedom to license others is of doubtful validity even when price fixing is not involved. See *United States* v. *Besser Manufacturing Company*, 96 F. Supp. 304, 311 (E.D. Mich.), affirmed, 343 U.S. 444; *United States* v. *Krasnov*, 143 F. Supp. 184, 201–202 (E.D. Pa.), affirmed, 355 U.S. 5; cf. *Blount Mfg. Co.* v. *Yale & Towne Mfg. Co.*, 166 Fed. 555, 559 (D. Mass.).

CONCLUSION

This appeal presents substantial questions of public importance. Probable jurisdiction should be noted.

Respectfully submitted.

ARCHIBALD COX,
Solicitor General.
WILLIAM H. ORRICK, JR.,
Assistant Attorney General.
ROBERT B. HUMMEL,
ARTHUR J. MURPHY, JR.,
Attorneys.

SEPTEMBER 1964.

744-912—64——4

APPENDIX A

United States District Court, Eastern District of Michigan, Southern Division

Civil Action No. 21791

UNITED STATES OF AMERICA, PLAINTIFF

v.

HUCK MANUFACTURING COMPANY AND TOWNSEND COMPANY, DEFENDANTS

FINDINGS OF FACT AND CONCLUSIONS OF LAW UPON DISMISSAL UNDER RULE 41(b) OF THE FEDERAL RULES OF CIVIL PROCEDURE

STATUS OF CASE

This is a civil action upon complaint of United States of America against the defendants under 15 USC 4 to prevent and restrain alleged combination and conspiracy by defendants in violation of the Sherman Act, 15 USC 1 and 2.

Jurisdiction of the subject matter hereof and proper venue of the parties hereto duly appear and are conceded by the parties.

On the date of filing the Complaint herein, October 24, 1961, plaintiff also instituted criminal action No. 39017 in this Court on indictment of the defendants for the same alleged violations of the Sherman Act that are alleged in this civil action.

The criminal action was tried before the Honorable Fred W. Kaess, U.S. District Judge in this Court, and a jury, February 26, 1963 through March 12, 1963. At the close of the Government's case on March 13, 1963, the defendants moved the Court for judgments of acquittal, which were granted, on the ground that the Government had not by its evidence established the Sherman Act violations alleged in the indictment. The opinion and order contained the following paragraph, summarizing the reason for the granting of the motion for judgment of acquittal

> "To conclude, it has not been shown that the object of defendants' patent arrangement was to secure a greater reward than that attributable to the superiority of the products, or to achieve monopoly power."

Thereafter by stipulation of the parties herein, the record of proceedings in the said criminal action, No. 39017, was introduced in evidence in this civil action subject to all the objections appearing therein, as constituting the Government's case in chief in this action, on which the Government rests; it being further stipulated that the defendants in this action may move for dismissal of this action on that record, pursuant to the Federal Rules of Civil Procedure. The applicable rule is Rule 41(b), providing that:

> "After the plaintiff, in an action tried by the Court without a jury has completed the presentation of his evidence the defendant, without waiving his right to offer evidence in the event the motion is not granted, may move for a dismissal on the ground that upon the facts and the law the plaintiff has shown no right to relief. The Court as trier of the facts may then determine them and render judgment against the plaintiff or may decline to render any judgment until the close of all the evidence.

If the Court renders judgment on the merits against the plaintiff, the Court shall make findings as provided in Rule 52(a)."

THE PLEADINGS

The Complaint in this case (Par. 14) alleges that:

"Beginning at least as early as 1954, the exact date being to the plaintiff unknown, and continuing thereafter up to and including the date of the filing of this complaint, the defendants have engaged in a combination and conspiracy in unreasonable restraint of trade and to monopolize the aforesaid interstate trade and commerce in lockbolts in violation of Sections 1 and 2 of the Sherman Act. The unlawful combination and conspiracy is continuing and will continue unless the relief hereinafter prayed for is granted."

The Complaint further alleges (Par. 15):

"The aforesaid combination and conspiracy has consisted of a continuing agreement, understanding and concert of action among the defendants, the substantial terms of which have been and are:

"(a) to fix and maintain prices, terms and conditions for the sale of lockbolts manufactured in the United States by defendants who are the only producers of a general line of lockbolts;

"(b) To limit the number of licensees permitted to manufacture lockbolts;

"(c) To require the consent of the only general licensee before the patent owner is allowed to license any other firm for the production of its general line of lockbolts;

"(d) To have the defendants who are the two dominant manufacturers of lockbolts cross license each other on all improvements of and substitutes for lockbolts which might in the future be developed by either defendant."

The Complaint (Par. 5) defines "lockbolt" to mean a two-part metal fastening device used to permanently join together two or more pieces of metal in the manner illustrated by Appendices "A" and "B" attached to the Complaint.

The Complaint further alleges (Par. 6) that lockbolts are patented devices, are produced in various shapes and sizes depending on the use for which they are intended, and are constructed of a number of different metals including alloy steels, aluminum and titanium.

The Complaint (Par. 7–10) states that the majority of all lockbolts are designed for use in the airframe manufacturing industry, and are used to hold together the wings and body of aircraft; also in manufacture of truck trailers, house trailers, railroad cars and ships, United States naval vessels, and other industrial applications where formerly a nut and bolt or rivet or other fastener would have been used. That a lockbolt is superior to the ordinary rivet in that the lockbolt pin can be made of metal strong enough to withstand sheering action; that unlike the rivet the lockbolt pulls together the pieces of metal being joined and eliminates sheet-gap; that unlike a nut and bolt a lockbolt cannot be loosened by vibration or passage of time. That other devices also used to join pieces of metal have not the peculiar advantages of lockbolts; that in the aircraft manufacturing industry, once the lockbolt has been specified by the manufacturer's engineering staff, other devices cannot thereafter readily be substituted.

The Complaint further states (Par. 11) that lockbolts are manufactured and sold by defendant, Huck Manufacturing Company, under patents assigned to it. That Huck Manufacturing Company has licensed defendant Townsend Company to manufacture and sell a general line of lockbolts and has also licensed two other firms to manufacture and sell lockbolts of titanium only.

The Complaint (Par. 13) further states that lockbolts sold in the United States in recent years were valued at approximately Sixteen Million Dollars ($16,000,000.00) annually.

Defendants, answering the Complaint, deny that they have or are engaged in a combination and conspiracy in unreasonable restraint of trade and to monopolize interstate trade and commerce in lockbolts in violation of Sections 1 and 2 of the Sherman Act, deny that the alleged unlawful combination and conspiracy is continuing and will continue, and deny paragraphs 15, 16 and 17 of the Complaint, alleging respectively a continuing agreement, understanding and concerted action among defendants constituting the alleged unlawful combination and conspiracy; and deny that in formulating and effectuating the alleged unlawful combination and conspiracy they have entered into the various agreements and done various things and performed the various acts alleged in paragraph 16 of the Complaint, and deny the effects of the alleged unlawful combination and conspiracy alleged in paragraph 17 of the Complaint, and deny that plaintiffs are entitled to relief demanded by the Complaint.

Defendants, by answer, admit that lockbolts are patented devices, that they are manufactured and sold by defendant Huck Manufacturing Company under

patents assigned to it, and that Huck Manufacturing Company has licensed defendant Townsend Company under such patents; that the major portion of lockbolts produced by defendants are designed to meet the standards of the airplane industry and that the same are used in the construction of aircraft; aver that lockbolts are a small proportion of fastening devices used in the construction of aircraft; admit that lockbolts are used in the manufacture and repair of truck trailers, house trailers, railroad cars and ships, including United States naval vessels, and other industrial applications; and aver that many types of fasteners other than lockbolts are likewise used; aver that lockbolts have some advantages over other devices used to join individual pieces of metal, and that other devices used to join individual pieces of metal have advantages that lockbolts do not have; aver that the aircraft manufacturers have a choice of fastening devices to be used to fasten together the parts of any airplane under design and admit that whatever fastening devices are chosen, other fastening devices cannot thereafter be readily substituted, and aver that this holds true whether a lockbolt is to be substituted for another fastening device originally selected or whether another fastening device is to be substituted for the lockbolt originally selected.

The contention of the Government that emerges from pleadings, evidence and arguments and briefs in this case is that violations of Sections 1 and 2 of the Sherman Act have occurred by reason of alleged combination and conspiracy by and between defendants in unreasonable restraint of trade and to monopolize interstate trade and commerce in lockbolts conceded to be subject of and covered by valid and subsisting United States patents owned by defendant Huck Manufacturing Company, by reason of alleged

illegality of license agreement between Huck between defendants that Huck would not license any third parties under its lockbolt patents, except for special kinds of lockbolts subject to those patents that neither Huck nor Townsend were interested in manufacturing, in return for Townsend's agreement to follow Huck's prices, terms and conditions of sale for the patented lockbolts, for so long as Huck did not license any third parties to manufacture and sell Huck's patented lockbolts; that Huck thereby illlegally restrained itself from granting licenses to others to manufacture and sell under its lockbolt patents; and that the prices, terms and conditions of sale for the patented lockbolts were illegally fixed by the parties.

The defendants contend that the licensing arrangements between themselves are valid and legal and that their operations under the license agreement do not exceed the bounds of that conduct permitted to a patentee and licensee under valid patents as set forth in *United States* v. *General Electric Co.*, 272 U.S. 476 (1926), *Ethyl Gasoline Corp.* v. *U.S.* 309 U.S., 436, 456; *United States* v. *E. I. du Pont de Nemours & Co.*, 118 F. Supp. 41, 224, D.C. Del.; *Transparent-Wrap Machine Corporation* v. *Stokes & Smith Company*, 329 U.S. 637, 645–648; *Binks Manufacturing Co.*, v. *Ransburg Electro-Coating Corp.*, 281 F. 2d 252, 259 (C.A. 7).

No jury having been demanded by any of the parties in the cause, and the defendants having duly moved under Rule 41(b) for dismissal of the action on the ground that upon the facts and the law the plaintiff has shown no right to relief, and the Court as trier of the facts having duly heard the said motion in open court, upon the evidence presented by the plaintiff and having duly considered the evidence, the arguments of counsel for the respective parties in

open court with respect thereto, and the briefs presented and filed by the respective parties with respect thereto, has determined the facts and now renders judgment against the plaintiff, and hereby makes its findings of fact and its conclusions of law thereon and directs entry of the appropriate judgment thereon as provided in Rule 52(a).

Findings of Fact

1. Huck Manufacturing Company (hereinafter referred to as "Huck") is a corporation organized and existing under the laws of the State of Michigan, with general offices and principal place of business at 2500 Bellevue Avenue, Detroit, Michigan. Huck transacts business within the Eastern District of Michigan, Southern Division.

2. Townsend Company was at the beginning of this suit a corporation organized and existing under the laws of the Commonwealth of Pennsylvania. It is now a Division of Textron Industries, Inc., a corporation organized and existing under the laws of the State of Delaware. The Townsend Company Division has general offices and its principal place of business in Beaver Falls, Pennsylvania. (Wherever hereinafter used, the name "Townsend" refers to Townsend Company, whatever its corporate organization at that time.) Townsend transacts business within the Eastern District of Michigan, Southern Division.

3. Huck manufactures the lockbolts in Detroit, Michigan, and sells the same throughout the State of Michigan and throughout the United States. (Complaint, Par. 3; R. 142.)

4. Townsend manufactures the lockbolts in plants in Santa Ana, California, and Ellwood City, Pennsylvania. Townsend sells the same throughout the State

of Michigan and throughout the United States. (Complaint, Par. 3.)

5. The "lockbolt" is a two-part metal fastening device used to join together permanently two or more pieces of metal. The two parts are a "lockbolt pin" and a "lockbolt collar." The "lockbolt pin" is a metal pin having an enlarged head which abuts against one of the members being joined, a grooved portion about which the lockbolt collar is swaged and a grooved pintail which is gripped, pulled and broken off as the collar is swaged. The "lockbolt collar" is a cylindrical piece of metal designed to slip over the lockbolt pin and be swaged into its grooves. (Complaint, Par. 5, Appendices "A" and "B" attached to the Complaint; Townsend Answer, Par. 5; Huck Answer, Par. 5; R. 147-152.)

6. Lockbolts are patented devices used to fasten together two or more pieces of metal. They are produced in various shapes and sizes depending on the use for which they are intended, and are constructed of a number of different metals including alloy steels, aluminum and titanium. (Complaint, Par. 6.)

7. Lockbolts are used in the airframe manufacturing industry in the production of military and civilian jet and propeller-driven aircraft, in the manufacture and repair of truck trailers, house trailer, railroad cars and ships, including United States naval vessels, and in other industrial applications. The major portion of lockbolts manufactured by both defendants are used in the airframe manufacturing industry. (Townsend Answer, Par. 7; Huck Answer, Par. 7; R. 172.)

8. Total sales of lockbolts in the United States by Huck and Townsend in the year 1960 amounted to Five Million Nine Hundred Seventy-seven Thousand Five Hundred Ninety-three and 96/100 Dollars ($5,977,593.96). (Exhibit 80 and 103.)

9. Several types of fasteners other than lockbolts are used and usable for the same purposes as lockbolts (R. 822–24).

10. The lockbolt was invented by Louis Huck, President and then principal stockholder of Huck Manufacturing Company. Huck Manufacturing Company is the owner of United States Patents Nos. 2,531,048 and 2,531,049 dated November 21, 1950, covering the lockbolts. These patents are conceded to be valid, subsisting and enforceable. (Pre-Trial Order covering Pre-Trial conference of October 1, 1962.)

11. The lockbolts are and since 1950 have been manufactured and sold by Huck under the above-described lockbolt patents.

12. In 1951, after defendant Huck had entered upon the manufacture and sale of its patented lockbolts, defendant Townsend copied those lockbolts and entered into the manufacturing and sale thereof in competition with Huck by infringing Huck's lockbolt patents; that Huck, then refusing to grant Townsend a license under its lockbolt patents, sued Townsend for infringement thereof, obtained in 1952–1953 a decision and judgment against Townsend, holding the patents to be valid and infringed by Townsend; that Townsend then again sought license under the patents and took an appeal from the judgment against it, and ceased the manufacture and sale of the lockbolts; that during the pendency of the appeal Huck, confronted by demand of its customers for a second source of supply for said lockbolts, and encountering delay in meeting delivery dates specified by its customers (R. 194, 197), reconsidered the advisability of granting Townsend's continued request for a license, and finally after negotiations with Townsend in the summer of 1954 did grant Townsend a written license under Huck lockbolt patents, dated September 14,

1954, which is Government Exhibit GX 17; and that after the grant of the license GX 17 Townsend's appeal from the judgment against it was dismissed, and the patent infringement suit pending between the parties thereby terminated.

13. In the negotiations between the parties in the summer of 1954, Huck took the position that it wanted to issue no more licenses under lockbolt patents than it believed would adequately supply the demand for the patented lockbolts and alleviate the difficulties it faced, namely, the demand of customers for a second source of supply, and delay in meeting delivery dates specified by the customers (Exhibits GX 74; 104). Townsend wanted to obtain an exclusive license under the lockbolt patents except for retention by Huck of its own right under the patents to manufacture and sell the lockbolts, and thereby obtain for Townsend as much as it could of the business of manufacturing and selling the patented lockbolts (R. 211–213, 875–877).

14. The written license GX 17 includes the Huck lockbolt patents Nos. 2,531,048 and 2,531,049 granted November 21, 1950, expiring November 21, 1967, which were held valid and infringed by Townsend in the patent infringement suit between Huck and Townsend, grants Townsend a nonexclusive license to manufacture and sell lockbolts, improvements thereon and substitutes therefor of the same type covered by the licensed patents (Par. 1) for which Townsend agrees to pay Huck a royalty of five percent (5%) of the net selling price of the lockbolts manufactured and sold by Townsend and covered by the licensed patents (Par. 2), provides that Townsend grants Huck a nonexclusive royalty-free license with right to sublicense improvements on the lockbolts made or acquired by Townsend during the life of the license

(Par. 8); provides that Townsend shall use its best efforts to manufacture and sell lockbolts up to at least 9/16" pin diameter (Par. 9); provides that for lockbolts sold by Townsend as Huck equals with pin diameter up to 3/8" Townsend shall maintain Huck's quality for full equivalence in shear tension and fatigue (Par. 10); provides that Townsend will identify the lockbolts manufactured and sold by it to distinguish them from the lockbolts manufactured and sold by Huck (Par. 11); that Huck will furnish Townsend drawings and specifications it has for the lockbolts and know-how it has for the production of the lockbolts, and that Townsend will furnish Huck with know-how it may develop for the production of the lockbolts (Par. 17); provides that as Townsend will be required to expend considerable money to provide facilities for entering the manufacture and sale of lockbolts (Par. 12), that for the first two years the license shall be exclusive to Huck and Townsend except in case of national emergency (Par. 12a), and that Townsend during the two-year exclusive period shall maintain at least Huck's prices on lockbolts manufactured and sold by Huck according to Huck's published current price schedule as changed from time to time and computed according to Huck's published Standard Pricing Policy, and prescribed freight charge computation (Par. 12b); provides that Townsend may cancel the agreement at any time on six months' notice in writing to Huck (Par. 13); and (Par. 16) that unless previously terminated by Huck in the event of Townsend's failure to pay royalties or breach of any material provision of the agreement (Par. 6); or by cancellation by Townsend (Par. 13), the agreement and license shall extend for the full

term of the United States Letters Patent which are or may be included in the agreement.

15. The Government adduced testimony from its principal witness Looker, a former employee and officer of Huck Manufacturing Company, to the effect that there was a verbal agreement between defendants Huck and Townsend, supplemental to the written patent license agreement GX 17 of September 14, 1954, that was in substance that Huck would continue the lockbolt patent license GX 17 exclusive to Townsend, and not grant licenses under the lockbolt patents to others so long as Townsend, for the patented lockbolts it manufactured and sold, maintained Huck's established prices on the lockbolts which Huck manufactured and sold.

It is the testimony of Looker that this alleged verbal agreement was made between Armour, President of Huck, and Dickenson, President of Townsend, at a meeting which occurred in the summer of 1954, during negotiations for and prior to the time the written lockbolt patent license GX 17 of September 14, 1954 was completed and signed by the parties.

Looker, after graduating from the Naval Academy and a short term of active service in the Navy, left the service in September, 1947, and became employed by defendant Huck Manufacturing Company under his stepfather Louis C. Huck, who was at that time President of Huck Manufacturing Company, first serving as a clerk in the sales office, then as manager of technical publications until 1952, then as Sales Manager until May, 1954, then as Vice President in Charge of Sales until August, 1956, when he voluntarily resigned upon acquiring an interest in the Brown-Line Corporation of El Segundo, California, in association with Milton A. Miner, then West Coast Sales Representative of Huck Manufacturing Com-

pany. Looker assumed presidency of the Brown-Line Corporation which was engaged in the manufacture of devices for holding down cargo, seats, etc., in airplanes. Looker, upon leaving Huck Manufacturing Company, endeavored to obtain a license for the Brown-Line Corporation from Huck Manufacturing Company under the Huck lockbolt patents. Huck Manufacturing Company refused to grant the license, but Looker continued his endeavors to obtain such license. These efforts being unsuccessful, he initiated in the Department of Justice and pressed and followed up the action of the Department which culminated in the criminal action No. 39017 and this present civil action. Prior to the trial of the criminal action, Looker caused the institution of suit in the United States District Court for the Southern District of California by Brown-Line Corporation against the defendants Huck Manufacturing Company and Townsend Company under 15 USC 15 for treble damages on account of alleged violation of the Sherman Act.

Subsequent to the grant of the lockbolt patent license by Huck Manufacturing Company to Townsend Company, GX 17 dated September 14, 1954, and prior to his resignation from Huck in 1956, Looker, inconsistent with his present contention that Huck was prohibited from granting licenses under its lockbolt patents to others than Townsend by the alleged verbal agreement with Townsend, recognized (R. 566) that Huck Manufacturing Company was free to grant such licenses. He issued memoranda (Ex. DXY; GX 59) while employed by Huck during the period subsequent to the granting of the license GX 17 on September 14, 1954, contemplating the grant of such licenses, and also immediately upon leaving the employ of Huck and assuming the presidency of Brown-

Line Corporation in 1956 sought such license from Huck for Brown-Line Corporation.

16. The verbal agreement or understanding which the Government contends was entered into by the parties as part of the written license agreement GX 17, completed and signed by the parties as of September 14, 1954, was in purport and effect to make or continue the lockbolt patent license exclusive to Townsend, except for retention by Huck of its own right under the patents to make and sell the patented lockbolts, for so long as Townsend maintained for the lockbolts which it manufactured and sold under the license, the prices, terms and conditions of sale Huck established for the lockbolts which Huck manufactured and sold under the title and rights it retained under the same patents. The verbal agreement was no more than the exercise by Huck of its right as the patent owner of the lockbolt patents to grant or extend an exclusive license to another (in this case, Townsend) for the unexpired term of those patents and to require as a condition thereof that its licensee sell the patented lockbolts, which it could legally manufacture only under the license, upon the terms and conditions of sale and prices established by Huck, and the exercise by Townsend of its right to agree to and accept such a patent license.

17. Huck, as owner of the patents and licensor, kept its customers and Townsend, its licensee under the patents, informed by published price lists of the prices, terms and conditions of sale of the patented lockbolts which Huck established and followed in the sale of lockbolts manufactured by it.

18. Townsend manufactured and sold the patented lockbolts under the license GX 17 and, except for occasional deviations, observed and followed substan-

tially the same prices, terms and conditions of sale established and observed by Huck for the sale of the patented lockbolts which Huck manufactured.

19. There is no evidence in this case that the licensee Townsend was granted, or had, or exercised any power or authority to fix prices under Huck's lockbolt patents for Huck, the patent owner, or any other licensee under the Huck lockbolt patents to follow.

20. There have been various contacts between Huck, the patent owner, and Townsend, its licensee, since the patent license agreement GX 17 was entered into. These contacts, as disclosed by the testimony and documentary exhibits, have been in pursuance of the provisions of the patent license agreement GX 17 that the patented lockbolts produced by the two companies be interchangeable, that required quality be maintained, and that standards respecting sizes, finishes and lubricants applied in the manufacture of the patented lockbolts be followed. Such contacts have also been by way of interchanging information to make available technical developments and improvements in the patented lockbolts, and in installation tools and equipment, and respecting joint advertising, all attributable to the purpose of encouraging and increasing the use of the patented lockbolts in the trade. The Court finds that these contacts have been in furtherance of legitimate, normal business motives permissible under the patent license, on the part of both Huck and Townsend, and have not been for the purpose of fixing prices or to enable Townsend to fix or dictate the prices charged for the patented lockbolts.

21. Huck lockbolt patents, under which Huck granted the license GX 17 to Townsend, are conceded to be valid and subsisting and to cover lockbolts which

Townsend has manufactured and sold and is presently manufacturing and selling under the license GX 17.

22. Huck has granted no licenses to others than Townsend under its lockbolt patents, except for a non-exclusive license to Pheoll Manufacturing Co. dated September 26, 1956 (Government Exhibit GX 76), and a non-exclusive license to Standard Pressed Steel Co. dated October 4, 1956 (Government Exhibit GX 77), both of which were limited to the making and selling of lockbolts made of titanium which Huck and Townsend do not make, and neither of which require price maintenance.

Others than Townsend requested licenses under Huck's lockbolt patents, which Huck refused to grant. They are Brown-Line Corporation, Olympic Srew & Rivet Corporation, Illinois Tool Works; Pheoll Manufacturing Co., and Republic Steel Corporation.

These refusals by Huck Manufacturing Company are not shown to have been participated in by or known to defendant Townsend Company, or to have occurred otherwise than by Huck, in the exercise of its own judgment and right to select or reject prospective licensees and to prefer one over others for considerations within its discretion.

There is no evidence that Huck and Townsend could not adequately handle all available trade and commerce in the patented lockbolts.

23. On November 1, 1955 Huck granted a separate license to Townsend (Government Exhibit GX 19) in which Huck grants Townsend a nonexclusive license to make and sell lockbolt stumps and lockbolt collars, and Townsend grants back to Huck a nonexclusive license under improvements thereon which Townsend may make or acquire. There are no price maintenance requirements in this license. The stumps were

not licensed under the license GX 17 of September 14, 1954.

On October 22, 1958 an agreement (Government Exhibit GX 70) was entered into between Huck and Townsend in which Huck and Townsend exchange options to obtain nonexclusive licenses from each other to manufacture and sell under each other's patents tools for installing or setting, and for removal, of lockbolt devices. Only nonexclusive licenses are obtainable by Townsend from Huck or by Huck from Townsend under this agreement. There are no price maintenance requirements in this agreement.

On October 22, 1958, Huck and Townsend entered into an agreement (Government Exhibit GX 71) in which provision was made for Townsend to purchase from Huck tools and equipment made by Huck for the installation and setting, or for the removal, of lockbolt devices; and for Huck to purchase from Townsend tools and equipment made by Townsend for the installation or setting, and for the removal, of lockbolt devices. There is nothing in this agreement which restricts or prevents *Huck from selling its tools* to anyone it chooses, and nothing in the agreement that prevents Townsend from selling its tools to anyone it chooses. There are no price maintenance requirements in this agreement.

On June 25, 1958, Huck entered into an agreement (Government Exhibit GX 72) granting to Townsend a nonexclusive license to manufacture and sell blind lockbolts, illustrated in the drawing Exhibit A attached to the agreement, according to Huck's know-how, specifications and engineering information, and Townsend grants back to Huck a nonexclusive license under improvements thereon which Townsend may make or acquire. This license contains no price maintenance requirements.

24. The so-called cross- or grant-back licenses from Townsend to Huck respecting Townsend's improvements do not in any way restrict or restrain Townsend's use, manufacture or sale of its own improvements, or Townsend's right to grant licenses to others under those improvements. They merely grant Huck the nonexclusive right or permission to make and sell such improvements in common with Townsend or anyone else Townsend may choose to license to make and sell such improvements. These grant-back clauses provide Huck with no power whatever to restrain or monopolize trade in Townsend's improvements. There is no evidence that they are used or have ever been used or are likely to be used to restrain or monopolize trade in Townsend's improvements.

There is no evidence that Townsend possesses or has in prospect any improvements or patents thereon which are or would be subject to the grant-back clauses. The grant-back clauses themselves are nonexclusive and provide no power for restraint or monopolization of Townsend improvements. They are, on the contrary, adverse to restraint or monopoly.

In GX 17, the lockbolt patent license of September 14, 1954, the grant-back complained of is Par. 8 of that agreement, which states:

> "Townsend hereby grants to Huck a nonexclusive, royalty-free license, with the right to sublicense upon any improvements on said lockbolt devices made or acquired by Townsend during the life of this agreement coming within the claims of the licensed patent, or lockbolt devices of the same type which are substitutes of the lockbolts licensed herein by Huck."

This is merely a grant-back to Huck of a nonexclusive license with right to sublicense on Townsend's

improvements. Being nonexclusive, it grants Huck no monopoly upon Townsend's improvements and no power to preclude Townsend or anyone else from making, selling and using those improvements. If the improvement happened to be one that was covered by Huck's own patents, then the only rights Huck would have with respect to it *would arise under its own patents* and not in any way under the nonexclusive grant-back provision of Par. 8. Consequently, the grant-back provision of Par. 8 grants no power to Huck over Townsend's patents on such improvements if any, and provides Huck with no power to prevent Townsend from making, selling or using those improvements or from licensing any others it chooses to do the same. Par. 12a, making the license granted by Huck to Townsend exclusive for the first two years, does not affect Par. 8, the grant-back by Townsend to Huck of a nonexclusive license on Townsend's improvements, for Par. 12a makes exclusive only the license which Huck grants to Townsend under Huck's own patents.

In GX 19, the separate license on stumps which are not included in or subject to GX 17, the grant-back provision is Par. 11, which states:

> "Townsend hereby grants to Huck a non-exclusive, royalty-free license, with right to sub-license on any improvements on said licensed products made or acquired by Townsend during the life of this agreement, coming within the claims of the licensed patent, or products of the same type which are substitutes for the licensed products licensed herein by Huck."

This grant-back provision is entirely nonexclusive, grants Huck no monopoly power whatever over Townsend's improvements nor any right to prevent the

manufacture, sale or use thereof by Townsend or any others whom Townsend chooses and is free to license.

In G70, the tool license option agreement, the grant-back provision by Townsend to Huck is Par. 7, which states:

> "The right and license granted to Huck by Townsend under paragraph 3 above with respect to the elected licensed products identified by Huck under paragraph 5 above shall include a nonexclusive right to license under any United States Letters Patent and applications for Letters Patent now owned or later acquired by Townsend with respect to said elected licensed products."

This is an entirely nonexclusive grant-back; it does not provide Huck with any monopoly or monopoly power over Townsend's improvements, nor any power to prevent the manufacture, sale or use of those improvements by Townsend or any others Townsend chooses and is free to license.

In GX 71, the sales agreement respecting tools, the grant-back provision is Par. 2, which reads as follows:

> "Townsend hereby grants to Huck a nonexclusive right, during the term of this agreement, to sell the beforementioned and described products manufactured by or for Townsend, together with any parts of or replacement for said articles. Townsend agrees that it will make the aforesaid products available to Huck in common with other purchasers."

This grant-back is nonexclusive and only of a right to purchase and sell Townsend's tools in common with others. It gives Huck no monopoly power whatever over Townsend's tools, nor any power whatever to restrain or prevent Townsend's manufacture, use or sale of its tools or license any others to do. They are

made available to Huck only in common with other purchasers.

In GX 72, the nonexclusive license from Huck to Townsend on blind lockbolts, the grant-back provision is Par. 11, as follows:

> "Townsend hereby grants to Huck a nonexclusive, royalty-free license, with the right to sublicense on any improvements on said licensed products made or produced by Townsend during the life of this agreement or products of the same type which are substitutes for the licensed products licensed herein by Huck."

This grants back to Huck only a nonexclusive license respecting Townsend's improvements. It grants Huck no monopoly power whatever over Townsend's improvements and no power whatever to restrain or prevent Townsend from making, selling or using Townsend improvements, or any others Townsend chooses and is free to license.

There is no agreement that prevents or restrains Townsend in any way from making, using or selling Townsend improvements on the lockbolts or licensing others to do the same.

There is no agreement that prevents or restrains Townsend in any way from developing and making and selling lockbolts that would be independent of and avoid Huck's lockbolt patents.

None of the separate licenses and agreements, GX 19, GX 70, GX 71 and GX 72, have any price fixing provisions or agreements whatever.

25. There is no evidence which indicates that the patent arrangement of Huck with Townsend was designed to or did secure to Huck other than a reasonable reward for the use of exclusive patent rights

of which Huck was the owner by the grant to it of the lockbolt patents.

26. There is no evidence that the purchasers and users of the patented lockbolts buy or use them for any reasons other than to utilize the advantages peculiar to them, or that they are prevented or restrained from obtaining other fastening devices for like uses available and obtainable in the market at comparable prices.

27. There is evidence that there are fastening devices other than the patented lockbolts which can be and are used for the same purposes and which are regarded as competitive with the patented lockbolts (R. 822–824), but there is no evidence in the record to define the industry or market in which the patented lockbolts and other fastening devices available for the same purposes and uses are being sold, or to show its magnitude.

28. There is no evidence from which the impact or effect of the combination and conspiracy alleged with respect to the patented lockbolts upon the market for the patented lockbolts and the other fastening devices used and usable for the same purposes can be evaluated or determined.

29. There is no evidence that Huck and Townsend had any intention to or did conspire to restrain or monopolize, or did restrain or monopolize, trade or commerce in lockbolts beyond the limits of the lawful patent monopoly granted to Huck as owner of the lockbolt patents.

Conclusions of Law

I. The Government concedes that under the authority of the decision in *U.S.* v. *General Electric Co.*, 272 U.S. 476, the patent owner who manufactures

and sells the patented articles can license another to make and sell the patented articles and require the licensee, with respect to the patented devices made and sold by the licensee under the licensor's patents, to observe and follow the licensor's prices, terms and conditions of sale.

This decision holds and establishes that it is not a violation of the Sherman Act for a patentee to grant a license to make, use and vend articles under the specifications of his patent for any royalty or upon any condition the performance of which is reasonably within the reward which the patentee by the grant of the patent is entitled to secure; that if the patentee licenses the manufacture and selling of the articles he may limit the selling by limiting the method of sale and the price, provided the conditions of sale are normally and reasonably adapted to secure pecuniary reward for the patentee's monopoly; that one of the valuable elements of the exclusive right of the patentee is to acquire profit by the price at which the article is sold, the higher the price the greater the profit; that when the patentee licenses another to make and vend and retains the right to continue to make and vend on his own account, the price at which his licensee will sell will necessarily affect the price at which he can sell his own patented goods; that the requirement that the licensee adopt and maintain, for the patented devices which it can make legally only under the license, the terms and conditions of sale and prices established and observed by the licensor for the patented devices made by the licensor, is normally and reasonably adapted to secure pecuniary reward for the patentee's monopoly, and does not violate the Sherman Act. This decision and authority has not been overruled.

In *Ethyl Gasoline Corp.* v. *U.S.*, 309 U.S. 436, 456, it is held and established that the patent law confers on the patentee a limited monopoly, right or power to exclude all others from the manufacturing, using or selling of his invention; that the extent of that right is limited by the definition of his invention as its boundaries are marked by the specifications and claims of the patent; that he may grant licenses to make, use or vend, restricted in point of space or time, or with any other restriction on the exercise of the grant and privilege, save only that by attaching a condition to his license he may not enlarge his monopoly and thus acquire some other which the statute and the patent together do not give.

In *U.S.* v. *E. I. du Pont de Nemours & Co.*, 118 Fed. Supp. 41, 224, D.C. Del., it was held and established that the owner of the patents has the right to grant an exclusive license and that such a license in no way violates the provisions of the Sherman Act, and that the patentee has the right to license, including the right to select or reject prospective licensees and to prefer one over others for considerations within its discretion. This was not in any way modified or overruled on appeal to the Supreme Court, 351 U.S. 377.

II. The establishment or fixing of prices and terms and conditions of sale for the patented lockbolts by defendant Huck Manufacturing Company, the owner of the patents, which was followed by its licensee, defendant Townsend Company, for the lockbolts which it manufactured and sold under the license from Huck, is in all material respects the same as that established and held in the *U.S.* v. *General Electric* case referred to above, not to be a violation of the Sherman Act.

III. In the case at bar there is no violation of the Sherman Act by Huck's establishment of the prices, terms and conditions of sale for the patented lockbolts and the following thereof by the licensee Townsend, for it is established law, under the *General Electric* case, that it is not violation of the Sherman Act for a licensee to follow the prices, terms and conditions of sale of the patent owner, by agreement to do so.

It is established law that it is not violation of the Sherman Act for Townsend, in the exercise of its own judgment, to follow Huck's prices and terms and conditions of sale. *U.S.* v. *International Harvester Co.*, 274 U.S. 693, 71 L. Ed 1302, Sylb. 4 and Opinion p. 310, where it is held:

> "The fact that competitors in business may see proper, in the exercise of their own judgment, to follow prices of another manufacturer, does not establish any suppression of competition, or show any sinister domination."

Theater Enterprises v. *Paramount Distributing Corp.*, 346 U.S. 537, 98 L. Ed. 273, Opinion p. 279 and Sylb. 2, where it is stated:

> "Although parallel business behavior is admissible evidence from which the finder may infer an agreement in restraint of trade violative of the Sherman Antitrust Act Sec. 1, such parallel behavior does not itself constitute a Sherman Act offense."

IV. The refusal by Huck Manufacturing Company to grant licenses to manufacture and sell lockbolts under its lockbolt patents to Brown-Line Corporation, Olympic Screw & Rivet Corporation, Illinois Tool Works, Pheoll Manufacturing Company, and Republic Steel Corporation, in the exercise of its own judgment and right to select or reject prospective licensees

and to prefer one over others for considerations within its discretion, is legal and not violative of the Sherman Act as held in the decision in *U.S.* v. *E. I. du Pont de Nemours* referred to above.

V. The so-called cross- or grant-back licenses from Townsend to Huck respecting improvements of Townsend are nonexclusive and provide no power for restraint or monopolization of trade in such improvement, and on the contrary being adverse to restraint and monoply, are not a violation of the Sherman Act.

It is established law, in *Transparent-Wrap Machine Corporation* v. *Stokes and Smith Company*, 329 U.S. 637, 645–648; 91 L. Ed. 563, 570–572, that a covenant by a licensee under a patent license agreement to assign to the licensor patents for improvements is not per se illegal.

Furthermore, it is noted that in the cited case as distinguished from the case at bar, the improvements of the licensee were to be assigned outright to the licensor, which would give the licensor exclusive rights therein, while in the case at bar the grant-back provisions by the licensee give the licensor only a nonexclusive permission to use the licensee's improvements in common with the licensee and with others all of whom the licensee is free to choose and license.

See also *Binks Manufacturing Co.* v. *Ransburg Electro-Coating Corp.*, 281 Fed. (2) 252, 259 (C.A. 7), where it is held that a license-back clause requiring future inventions by the licensee pertaining to method covered by the license to be licensed to the patentee royalty-free, on a nonexclusive basis, with right to sub-license others, is not per se illegal where there is no widespread network of such agreements between competing companies affecting an entire industry.

VI. The Court in a non-jury case, on motion under Rule 41(b), is not required to review the evidence in the light most favorable to the Government; it is required only to determine whether the plaintiff has made out its case by a preponderance of evidence. *Island Service Co.* v. *Perez,* 308 F. 2d 799 (9th Cir. 1962); *Allred* v. *Sasser,* 170 F. 2d 233 (7th Cir. 1948); *United States* v. *Borden Co.,* 111 F. Supp. 562 (N.D. Ill. 1953); *aff'd in part, rev'd in part,* 347 U.S. 514 (1954); *Bach* v. *Friden Calculating Machine Co., Inc.,* 148 F. 2d 407 (6th Circ. 1945); *Moore's Federal Practice,* 1044–45 (2d Ed., 1951). Barron and Holtzoff, *Federal Practice and Procedure,* (2) Ed. 1961 (Vol. 2b) pp. 149–151.

Where the evidence submitted gives equal support to each of two inconsistent inferences, neither is established, and judgment, as a matter of law, must go against the party upon whom rests the necessity of sustaining one of the inferences as against the other. *Penna. R.R. Co.* v. *Chamberlain,* 228 U.S. 333, 339–340, 79 L. Ed. 819, 823.

VII. I conclude upon the evidence submitted that the case at bar is in all material respects the same as and ruled by the decision in *U.S.* v. *General Electric Co.,* 272 U.S. 476, 489, and that it is distinguished in substantially the same respects as the General Electric case from the decisions in *U.S.* v. *Masonite Corp., et al,* 316 U.S. 265; *U.S.* v. *Univis Lens Company,* 316 U.S. 241; *U.S.* v. *Line Material Company, et al,* 333 U.S. 287; *U.S.* v. *United States Gypsum Co., et al,* 336 U.S. 364; *U.S.* v. *New Wrinkle, Inc., et al,* 342 U.S. 371; *Newburgh Moire Co.* v. *Superior Moire Co.,* 237 Fed. (2d) 283–284; *U.S.* v. *Besser Mfg. Co.,* 96 Fed. Supp. 304, 310–311; *US.* v. *Kras-*

nov, et al, 143 Fed. Supp. 184; *U.S.* v. *General Electric Co.,* 80 Fed. Supp. 989—which the Government urges as controlling.

In the case at bar the Court finds no industry-wide price-fixing licensing, no agreement or conspiracy between a plurality of licensees preventing grant of other licenses by the patent owner, no granting of a plurality of price-fixing licenses to a plurality of competiting licensees, no cross licensing by one patent owner creating by contract in another the power to issue licenses and fix prices under patents which are not owned by the licensor, no pooling of independently owned competing patents with price-fixing licenses under the pooled competing patents, no arrangements for control of resale prices of patented devices, and no agreements for fixing prices on unpatented articles—some or all of which practices were found to be controlling aspects of the situations in the cases above mentioned on which the Government relies.

VIII. The Court concludes upon the evidence submitted by the plaintiff, and the law applicable thereto, that the plaintiff has not shown by preponderance of evidence that the defendants have or are engaged in a combination and conspiracy in unreasonable restraint of trade and to monopolize interstate trade and commerce in lockbolts in violation of Sections 1 and 2 of the Sherman Act, and has not shown any right to relief as prayed.

IX. The Court concludes that the plaintiff has failed to prove a violation of Sections 1 and 2 of the Sherman Act for the additional reason that it failed to show that the patent arrangements between Huck

and Townsend were designed to or did secure a reward beyond that to which Huck as the patent owner was legally entitled.

IT IS THEREFORE ORDERED, that judgment be entered herein against the plaintiff dismissing this action and the Complaint filed herein.

Thaddeus M. Machrowicz
THADDEUS M. MACHROWICZ,
U.S. District Judge.

Dated at Detroit, Michigan, this 27th day of February, 1964.

APPENDIX B

In the United States District Court for the Eastern District of Michigan, Southern Division

Civil Action No. 21791

UNITED STATES OF AMERICA, PLAINTIFF

v.

HUCK MANUFACTURING COMPANY AND TOWNSEND CO., DEFENDANTS

ORDER TO ENTER FINAL JUDGMENT NUNC PRO TUNC

On February 28, 1964, Findings of Fact and Conclusions of Law upon Dismissal Under Rule 41(b) of the Federal Rules of Civil Procedure were entered in the above entitled action including and concluding in the order

> "IT IS THEREFORE ORDERED that judgment be entered herein against the plaintiff dismissing the action and the Complaint filed herein."

Pursuant to Rule 58 of the Federal Rules of Civil Procedure and under this separate document

> IT IS THEREFORE ORDERED NUNC PRO TUNC that judgment be entered herein against the plaintiff as of February 28, 1964, dismissing the action and the complaints filed herein.

Thaddeus M. Machrowicz,
THADDEUS M. MACHROWICZ,
U.S. District Judge.

Dated at Detroit, Michigan this 17th day of July, 1964.

APPENDIX C

United States District Court, Eastern District of Michigan, Southern Division

Civil Action No. 21791

UNITED STATES OF AMERICA, PLAINTIFF

v.

HUCK MANUFACTURING COMPANY, INC., AND TOWNSEND CO., DEFENDANTS

ORDER GRANTING DEFENDANTS' MOTION TO SUPPLEMENT RECORD

At a session of said Court, held in the Federal Building, in the City of Detroit, Michigan, on the 19th day of August, 1964.

Present: HONORABLE THADDEUS M. MACHROWICZ, U.S. District Judge.

Defendants having filed a motion to supplement the record in this case, after notice of appeal by plaintiff was filed in this cause; and the Court having heard said motion and having considered arguments of counsel thereon made orally and in briefs submitted to this Court, and having filed its memorandum of reasons why such Motion should be granted,

IT IS HEREBY ORDERED, That defendants' motion to supplement the record in this cause, now on appeal in the Supreme Court of the United States, be and the same is hereby granted.

IT IS FURTHER ORDERED, That the record in this cause be supplemented by entering, as orders of this Court, a "PRE-TRIAL

ORDER" and a "SECOND PRE-TRIAL ORDER" in the form attached to the motion to supplement the record.

Thaddeus M. Machrowicz,
THADDEUS M. MACHROWICZ,
U.S. District Judge.

UNITED STATES DISTRICT COURT, EASTERN DISTRICT OF MICHIGAN, SOUTHERN DIVISION

Civil Action No. 21791

UNITED STATES OF AMERICA, PLAINTIFF

v.

HUCK MANUFACTURING COMPANY, INC., AND TOWNSEND CO., DEFENDANTS

MEMORANDUM ON ORDER GRANTING DEFENDANTS' MOTION TO SUPPLEMENT RECORD

Plaintiff filed a notice of appeal from a decision of this Court dismissing this action, reached on February 28th, 1964. Defendants thereafter filed a motion to supplement the record which is now before the Court.

The motion seeks to supplement the record by entering as orders of this Court two (2) pre-trial orders, in the form attached to the motion, and entitled "PRE-TRIAL ORDER" and "SECOND PRE-TRIAL ORDER." Defendants contend that entry of these orders to supplement the record is necessary in order that the record of proceedings truly disclose what occurred in this Court for the purpose of supplying a true, accurate and complete record for review on appeal.

Proposed pre-trial orders were drafted by the Court upon pre-trial hearings held on October 1, 1962 and

December 21, 1962. Copies thereof were submitted to counsel of record for the purpose of indicating to the Court, prior to entry of such orders, whether they adequately state the position of each party and agreements of counsel as presented at the hearings. Considerable correspondence followed submission of the proposed orders to counsel but, since no express consent to their entry on the record appeared therein, the orders were not filed or entered on the record. Upon a hearing on the motion, both sides admitted a belief that the proposed orders, in the form submitted to them, were entered prior to the trial of this cause.

The forms of orders attached to the motion are identical with the proposed pre-trial orders with one exception. Defendants ask by their motion that additional provisions be added to the "PRE-TRIAL ORDER" as drafted by the Court.

The "PRE-TRIAL ORDER" recites the gist of discussions and agreements made in the course of the pre-trial hearing of October 1, 1962, in the following language:

> Government counsel offered the following information to defense counsel to aid them in preparation for trial;
>
> * * * * *
>
> 7. The Government is proceeding on the same theory of law in this case as it has advanced in briefs submitted in the criminal case. After a re-study of the facts it will advise defendants of its position as to applicability of the General Electric case decision, if any, to this case.
>
> * * * * *
>
> 9. Counsel agreed to confer immediately upon conclusion of a pre-trial hearing in the criminal case scheduled for October 15th, 1962, with reference to matters discussed at this

> hearing and particularly as to information to be submitted by the Government as covered by sub-sections * * * 7 of this pre-trial order.
>
> Government counsel also advised the Court and opposing counsel of its position that facts in the instant case do not fall within the category of cases to which the doctrine expressed in the General Electric decision applies, and that the acts complained of in suit are illegal without application of that doctrine.

A criminal prosecution, based on charges which gave rise to the instant case, was then pending in this jurisdiction. The General Electric case to which reference is made above is *United States* v. *General Electric Co.*, 272 U.S. 476.

The "PRE-TRIAL ORDER" provided for adjournment of the pre-trial hearing to December 21, 1962.

On October 1, 1962 counsel were requested to report to the Court on October 15th, immediately after the criminal case pre-trial, to advise whether a trial date had been set so that trial schedules could also be arranged in the instant case. Counsel appeared pursuant to such request. At that time Government counsel reported that plaintiff is not attempting to have the doctrine of the General Electric case overruled, its contention in this case being that the facts herein do not fall within that doctrine; that while such doctrine is still good law, it is inapplicable here because acts alleged in this suit are illegal without application of the General Electric doctrine. The Government agreed to state its position in writing by December 29th. A letter, dated October 30, 1962, commenting on the Government's position, was received by the Court and copies were furnished to opposing counsel. A copy of such letter is attached hereto.

A memorandum of this "Report" to the Court was entered on the same day in a record of proceedings kept in the office file of this case by the law-clerk of this Court who was present on this occasion.

It is the recital of the events which occurred on October 15th which defendant's motion asks to be added to the "PRE-TRIAL ORDER."

This Court has authority to supplement the record at this stage of the proceedings in order that such record truly disclose what occurred in the trial Court. Rule 75(h), *Federal Rules of Civil Procedure;* 7 Moore's *Federal Practice,* § 75.15(1). The Government does not challenge such authority nor does it object to entry in the record of the proposed pre-trial orders in the form as originally drafted by the Court. It emphatically objects, however, to any change in one of the orders as requested by defendants in their motion.

During arguments on the motion counsel for both sides agreed that the Court may consider separately (1) the request in the motion for supplementation of the record by adding thereto the two (2) proposed pre-trial orders, and (2) the request for additional provisions in the proposed order entitled "PRE-TRIAL ORDER."

There being no objection to grant of the motion in respect to the first request, the motion will be granted, subject to disposition of the second phase of the motion as to whether the "PRE-TRIAL ORDER" should be entered on the record as originally drafted or with the changes proposed by defendant.

With regard to this second phase of the motion, the Government contends that the "PRE-TRIAL ORDER" as originally drafted by the Court fully, adequately and completely states the Government's

position as to applicability, if any, of the General Electric doctrine to this case; that if statements attributed to it were made, they were intended only to convey the information that the General Electric case was not expressly overruled; that the question whether the Government would attack that decision was not and could not be reached in this Court; that it is not a relevant question for this Court's consideration; and that the Government at no time intended to foreclose any future attempts to have such doctrine overruled.

Defendants, on the other hand, argue that their preparation for trial and trial of the case proceeded on the theory that no attempt would be made to in any manner question the doctrine but only to distinguish this case on facts from the General Electric case. Defendants intimate that, had the issue been injected into this case prior to trial, they may have presented their case differently.

This Court makes no attempt to add to the findings of fact and conclusions of law previously filed, by interpreting the meaning of the statements made by Government counsel on October 15th, determining whether any prejudice resulted to defendants by reason of such statements, or whether such statements preclude plaintiff from attacking the validity of the General Electric decision on appeal in this case. It is the considered opinion of this Court, however, that such statements, with a recitation of the circumstances under which they were made, should be found in the record of the case when it is being considered on appeal. The interests of justice will best be served if a full and complete record of all proceedings in the trial Court is available to the appellate court upon its review of the case.

Specifically, the second request in the motion is for addition of the following provision at the end of subsection 7, paragraph 2, page 4 of the "PRE-TRIAL ORDER":

> "On October 15, reporting on the applicability of the General Electric case, the Government stated that it is not attempting to have the doctrine set in the General Electric case overruled and stated only that facts in this case do not fall within that doctrine; that the doctrine is still good law but does not apply as the actions in this case are illegal without application of the doctrine; and that it will write a letter by December 29, describing in what way the facts of this case differ from the facts of the General Electric case. A copy of the letter to the Court, dated October 30, 1962, from the Assistant Attorney General of the United States, Antitrust Division of the Department of Justice, is attached hereto and made a part hereof."

The requested addition to the "PRE-TRIAL ORDER" correctly relates events which occurred on October 15, 1962. The "PRE-TRIAL ORDER" which will be added to the record of this case, under the ruling of this Court on the first phase of defendants' motion, should be changed accordingly, prior to filing.

For reasons stated herein, defendants' motion to supplement will be GRANTED and the record of this case will be supplemented in the manner as prayed for in the motion.

An order will be entered in accordance with the views expressed in this memorandum.

Thaddeus M. Machrowicz
THADDEUS M. MACHROWICZ,
U.S. District Judge.

UNITED STATES DEPARTMENT OF JUSTICE,
Washington, D.C., October 30, 1962.

Re: United States v. Huck Manufacturing Company, Inc., and Townsend Company—Civil Action No. 21791.

Honorable THADDEUS M. MACHROWICZ,
United States District Judge, United States District Court for the Eastern District of Michigan, Federal Building, Detroit 26, Michigan.

DEAR JUDGE MACHROWICZ: In the course of the pretrial conference held in your chambers on October 15, 1962, in the above-captioned case, counsel for defendant Townsend Company requested that the Government provide a statement describing in what way the facts of this case differ from the facts of *United States* v. *General Electric*, 272 U.S. 476 (1926).

In *United States* v. *General Electric* the relevant issue dealt only with the question of the validity under the Sherman Act of the price-fixing clause in a patent license agreement between a patentee and its licensee. The narrow decision in that case was that under those circumstances the price-fixing clause was legal. In the Supreme Court's more recent interpretation of that rule in *United States* v. *Line Material Company*, 333 U.S. 287 (1947), the limited nature of that *General Electric* ruling was emphasized and as the Supreme Court said:

> On the assumption *where a conspiracy to restrain trade or an effort to monopolize is not involved*, a patentee may license another to make and vend the patented device with the provision that the licensee's sale price shall be fixed by the patentee. (304) [Emphasis supplied.]

Applying this rule to the facts of the *Line Material* case the Supreme Court proceeded to strike down an arrangement by which two patentees had cross-

licensed each other and which arrangement also authorized one to fix prices under both patents. The Court characterized such an agreement as establishing an "intention to restrain." (312)

> Even where the agreements to fix prices are limited to a small number of patentees we are of the opinion that it crosses barriers erected by the Sherman Act against the restraint of trade though restraint is by patentee and their licenses. (*Ibid.*)

Since the date of the *Line Material* decision it has been held that mere price fixing, even when not coupled with any other restraints of trade, is nevertheless unlawful when incorporated in a series of patent licenses with substantially all manufacturers in an industry, *United States* v. *New Wrinkle, Inc.*, 342 U.S. 371 (1952), and even when incorporated in patent licenses with a mere plurality of firms in an industry, *Newburgh Moire Co.* v. *Superior Moire Co.*, 237 F. 2d 283–84, (3rd Cir. 1956).

The acts of defendants in this action fall within the prohibited area outlined in the foregoing cases. The complaint in this case charges defendants with having gone beyond a mere price-fixing arrangement. It charges that they have combined price fixing with a secret understanding not to license others and with further agreements to cross-license and grant back all future developments in the lockbolt field as part of a conspiracy to restrain trade and monopolize.

Moreover, on June 29, 1962, Honorable Fred W. Kaess, United States District Judge in this court in a companion criminal action to this captioned case (*United States* v. *Huck Manufacturing Company et al.*, Criminal No. 39017), ruled that the facts asserted in the indictment in that case—which are substantially identical to the facts asserted in the civil com-

plaint in this case—fell outside the *General Electric* doctrine. Specifically, Judge Kaess stated:

> * * * [T]he defendants move to dismiss the indictment for not stating facts sufficient to constitute an offense against the United States. They rely chiefly upon the leading case of *United States* v. *General Electric Co.,* 272 U.S. 476. There, indeed, a price restriction was upheld, but it must be recognized that not all price-restrictive licenses are valid. *United States* v. *Line Material Co.,* 333 U.S. 287; *United States* v. *United States Gypsum Co.,* 333 U.S. 364. Necessarily, the courts will look beyond the price restriction itself and consider the circumstances surrounding the exploitation of the patent. Experience counsels such an approach, for an agreement innocent when considered separately may be part of a plan condemned by the Sherman Act. Thus, the holder of a patent may not do as he pleases with the power granted him under the Patent Act, 35 USC § 154, but is subject in its exercise to the principles of the Sherman Act. Cf. *American Tobacco Co.* v. *United States,* 147 F. 2d 93, aff'd. 328 U.S. 781. See Furth, Price-Restrictive Patent Licenses Under the Sherman Act, 71 Harv. L. Rev. 815.

Accordingly, we submit that the facts of this case fall outside the facts and law of *United States* v. *General Electric,* supra.

Sincerely yours,

LEE LOEVINGER,
Assistant Attorney General,
Antitrust Division,

By: CHARLES R. ESHERICK,
Attorney, Department of Justice.

cc: Thomas W. Pomeroy, Jr., Esquire, 1130 Oliver Building, Pittsburgh 22, Pennsylvania.
Arthur W. Dickey, Esquire, 7–141 General Motors Building, Detroit 2, Michigan.

U.S. GOVERNMENT PRINTING OFFICE: 1964

LIBRARY
SUPREME COURT, U.S.

Office-Supreme Court, U.S.
FILED
OCT 27 1964
JOHN F. DAVIS, CLERK

IN THE

Supreme Court of the United States

October Term, 1965

No. 8

UNITED STATES OF AMERICA,
Plaintiff,

v.

HUCK MANUFACTURING COMPANY AND
TOWNSEND COMPANY,
Defendants

APPEAL FROM THE DISTRICT COURT OF THE UNITED STATES
FOR THE EASTERN DISTRICT OF MICHIGAN,
SOUTHERN DIVISION

MOTION TO AFFIRM

JOHN A. BLAIR,
J. KING HARNESS,
JOHN C. STERRITT,
7-141 General Motors Building,
Detroit 2, Michigan,
Counsel for Appellee, Huck Manufacturing Company.
ALBERT M. STERN,
Of Counsel for Huck Manufacturing Company.
THOMAS W. POMEROY, JR.,
S. K. McCUNE,
W. WALTER BRAHAM, JR.,
1130 Oliver Building,
Pittsburgh 22, Pennsylvania,
Counsel for Appellee, Townsend Company.
S. CHESTERFIELD OPPENHEIM,
Of Counsel for Appellees.

Interstate Brief & Record Co., 356 Congress St. E., Detroit 26, Michigan

SUBJECT INDEX

	Page
Motion to Affirm	1-38
Statement	2-5
Summary of Argument	6-10
I. With Respect to The Government's Urging That This Court Should Reconsider and Overrule United States v. General Electric Company, 272 U.S. 476 (1926)	6-9
This is Not a Proper Case to Reconsider And Determine Whether or Not General Electric Should Be Overruled Because the Government Expressly Disclaimed and Waived That Issue in the Court Below	6-7
II. The General Electric decision should not be overruled, even apart from the Government's waiver of that issue below	8-9
III. With Respect to the Government's Alternative Ground That the Huck-Townsend License Arrangement Goes Beyond General Electric and Violates the Sherman Act	9-10
The District Court Correctly Held That The Huck-Townsend Patent Arrangement Is In All Material Respects Within The Sanction of General Electric	9
The Government Misconceives The Inherent Nature Of An Exclusive License	9-10
Argument	10-38
I. This is not a proper case to reconsider and determine whether or not General Electric should be overruled because the Government expressly disclaimed and waived that issue in the court below	10-18

Page

The Government Affirmatively Disclaimed Attack Upon General Electric, Which it Asserted Was "Still Good Law" 11-17

While Lower Courts Generally Follow Supreme Court Decisions, The Government Could have Challenged General Electric As Allegedly No Longer A Vital Precedent 17-18

II. The General Electric decision should not be overruled, even apart from the Government's waiver of that issue below 19-34

The Patent Laws and The Antitrust Laws Are Construed By This Court In Pari Materia and the Antitrust Laws are Accordingly Modified Pro Tanto 19-22

This Case is Factually Like General Electric 22-23

The Scope of General Electric Has Been Clearly Defined 23-25

General Electric Is In Complete Harmony With Subsequent Decisions of This Court in Patent Misuse and Antitrust Cases 25-27

This Case Does Not Contain Any of the Factors Normally Present When This Court Overrules Its Prior Decisions 27-28

The General Electric Decision Has Been Justifiably Relied Upon by Businesses 29

The Government's Economic Analysis of the Alleged Effects Of General Electric is Devoid of Empirical Evidence, Being Based on Mere A Priori Assumptions ... 30-32

Whether General Electric Should Stand as a Precedent or Be Rejected is For Congress to Determine 32-33

Page

Overruling General Electric Would Open The Floodgates to Outlawing Other Valid Restrictions In Patent Licenses..... 33-34

III. The District Court correctly held that the Huck-Townsend Patent license arrangement is in all material respects within the sanction of General Electric..... 34-37

Conclusion 37-38

Addendum 39

CITATIONS

Cases:

Bement & Sons v. National Harrow Co., 186 U. S. 70, 22 S. Ct. 747, 46 L. Ed. 1058..... 22

Besser Manufacturing Co. v. United States, 96 F. Supp. 304 (E. D. Mich. 1951)..... 36

Clark v. United States, 13 F.R.D. 342 (D. Ore. 1952) 13

Columbia Pictures Corp. v. Coomer, 99 F. Supp. 481 (E. D. Ky. 1951)..... 29

Daitz Flying Corp. v. United States, 4 F.R.D. 372 (E. D. N.Y. 1945)..... 13

Duignan v. United States, 274 U. S. 195 (1927).. 13

Ethyl Gasoline Corp. v. United States, 309 U. S. 436, 60 S. Ct. 618, 84 L. Ed. 852..... 26

Ewing v. Howard, 7 Wall. 499 (1868)..... 14

Fowler v. Crown-Zellerbach Corporation, 163 F. 2d 773 (9th Cir. 1947)..... 13

Frank v. Giesy, 117 F. 2d 122 (9th Cir. 1941).... 12

General Talking Pictures v. Western Electric Co., 305 U. S. 124 (1938)..... 7, 33

Cases (continued): Page

Giordenello v. United States, 357 U. S. 480 (1958) 14
Glen Raven Knitting Mills v. Swanson Hosiery Mills, 189 F. 2d 845 (4th Cir. 1951) 29
Helvering v. Cement Investors, Inc., 316 U. S. 527 (1942) 13
Helvering v. Wood, 309 U. S. 344 (1940) 15
Hormel v. Helvering, 312 U. S. 552 (1941) 15
Mitchell v. Hawley, 16 Wall. 544 33
Motion Picture Patent Co. v. Universal Film Mfg. Co., 243 U. S. 502 (1917) 26
Montgomery Ward & Co. v. The Nothern Pacific Terminal Company of Oregon, 17 F.R.D. 52 (D. Ore. 1954) 12
Newberg Moire Co. v. Superior Moire Co., 237 Fed. (2d) 283-284 23
Peck v. Heurich, 167 U. S. 624 (1897) 14
Prestole Corporation v. Tinnerman Prod. 271 F. 2d 146 (6th Cir. 1959) 29
Ronson Patents Corp. v. Sparklet Devices Inc. et al., 112 F. Supp. 676 (E. D. Mo. 1953) 29
Rubber Co. v. Goodyear, 9 Wall. 788 33
Simpson v. Union Oil Co. 377 U. S. 13 (1964) 8, 19
Sinclair Refining Company v. George L. Howell, 222 F. 2d 637 (5th Cir. 1955) 12
Standard Sanitary Mfg. Co. v. United States, 226 U. S. 20 26
Sunbeam Corp. v. Wentling, 192 F. 2d 7 (3rd Cir. 1951) 29
United States v. An Article of Drug, etc., Acnotabs, 207 F. Supp. 758 (D. N.J. 1962) 12
United States v. E. I. DuPont de Nemours and Co., 10 F.R.D. 618 (D. Del. 1950) 13
United States v. E. I. DuPont de Nemours and Co., 11 F. R. D. 308 (D. Del. 1951) 13

Cases (continued): Page

United States v. Fallbrook Public Utility District, 165 F. Supp. 806 (S.D. Cal. 1958) 13
United States v. General Electric Co., 272 U. S. 476 2, 6
United States v. Huck Manufacturing Co. et. al., 214 F. Supp. 776, 777 3
United States v. Krasnov, 143 F. Supp. 184 37
United States v. Line Material, 333 U. S. 287 (1948) 18, 24, 26
United States v. Masonite Corp., 316 U. S. 265 26
United States v. New Wrinkle, 342 U. S. 371 27
United States v. Shubert, 15 F.R. Serv. 33.333, Case 1 (S.D. N.Y. 1951) 13
United States v. United States Gypsum Co., 340 U. S. 76 26
United States v. United States Gypsum Co., 333 U. S. 364 26
United States v. Vehicular Parking Ltd., 54 F. Supp. 828 (D. Del) 26
Virginian Rwy. Company v. Mullens, 271 U. S. 227 (1926) 14
Virtue v. Creamery Package Mfg. Co., 227 U. S. 8 14
Washington v. General Motors Acceptance Corp., 23 F.R. Serv. 16.32, Case 2 (S.D. Fla. 1956) .. 12
Westinghouse Electric Corp. v. Bulldog Electric Products Co., 179 F. 2d 139 (4th Cir. 1950) 29
Wong Tai v. United States, 273 U. S. 77 at 78 (1927) 13

Statutes and Rules:

	Page
Federal Rules of Civil Procedure:	
Rule 16	1, 12
Sherman Act, Sections 1, 2	2, 3
United States Constitution, Article I, Section 8	21
15 U.S.C. 29 (Expediting Act)	7
35 U.S.C.	32

Miscellaneous:

Blaustein & Field, "Overruling" Opinions in the Supreme Court, 57 Mich L. Review 151 (1958)	27
Hearings on Patent Law Codification and Revision Before Subcommittee No. 3, Serial No. 9, House Committee on the Judiciary, 82 Congress 1st Sess. (1951)	33
House Bills:	
H.R 7713, 77th Congress, 2nd Session (1942)	32
H.R. 109, 78th Congress, 1st Session (1943)	32
H.R. 1371, 78th Congress, 1st Session (1943)	32
H.R. 3874, 78th Congress 1st Session (1943)	32
H.R. 97, 79th Congress, 1st Session ((1945)	32
H.R. 3462, 79th Congress, 1st Session (1945)	32
Isreal, Gideon v. Wainright: The "Art" of Overruling, The Supreme Court Review 211 (1963)	27
Senate Bills:	
S. 2730, 77th Congress, 2nd Session (1942)	32
S. 2491, 77th Congress, 2nd Session (1942)	32
S. 2482, 79th Congress, 2nd Session (1946)	32
S. 72, 80th Congress, 1st Session (1947)	32

IN THE

Supreme Court of the United States

October Term, 1964

No. 538

UNITED STATES OF AMERICA,
Plaintiff,

v.

HUCK MANUFACTURING COMPANY AND TOWNSEND COMPANY,
Defendants

APPEAL FROM THE DISTRICT COURT OF THE UNITED STATES FOR THE EASTERN DISTRICT OF MICHIGAN, SOUTHERN DIVISION

MOTION TO AFFIRM

Appellees, Huck Manufacturing Company and Townsend Company, pursuant to Rule 16 of the Revised Rules of this Court, move that the judgment of the district court be affirmed on the ground that the questions on which the decision of this cause depends are not substantial or of public importance and need no further briefing or oral argument.

STATEMENT

This is a direct appeal from a final judgment of the district court dismissing the Government's civil antitrust suit against Huck Manufacturing Company ("Huck") and Townsend Company ("Townsend").[1]

The Government's complaint was dismissed by the district court because of failure of proof that the appellees "have or are engaged in a combination and conspiracy in unreasonable restraint of trade and to monopolize interstate trade and commerce in lockbolts in violation of Sections 1 and 2 of the Sherman Act * * *". The district court concluded that upon the evidence "the case at bar is in all material respects the same as and ruled by the decision in *U. S. v. General Electric Co.*, 272 U. S. 476, 489 * * *" and that the Government "failed to show that the patent arrangements between Huck and Townsend were designed to or did secure a reward beyond that to which Huck as the patent owner was legally entitled". (Conclusions VII, VIII and IX, J. S. 24a, 25a, 29a and 30a).

The appellant in its statement of the case has failed to deal with the nature and effect of the district court's supplement to the record entered on August 19, 1964, which amended a pretrial order and was made for the purpose of showing the position taken by the Government at a pretrial hearing. (J. S. 32a-38a.) Appellant has treated the subject of the district court's order of August 19, 1964 as so unimportant as to warrant mention only in a footnote (J. S. 10-11, Footnote 10), while the district court considered the matter of such importance to its treatment of the case as to warrant clarification by a separate order and memorandum. (J. S. 32a-38a). The district court specifi-

[1] The Government commenced the civil action involved herein, together with a companion criminal suit on October 24, 1961.

cally found that the Government at a pretrial hearing had taken the position that it was not attempting to have the doctrine set in the *General Electric* case overruled and that the doctrine "is still good law". (J. S. 38a.)

The district court rendered an opinion incorporating careful and detailed findings of fact and conclusions of law. The appellant has not directly challenged the district court's findings of fact, but in its statement of the case in the Jurisdictional Statement describes the case in a way which differs in several important respects from the findings of fact of the district court. Appellees believe it is important for this Court to understand in what ways the appellant is stating the evidence contrary to the findings of fact.

In its statement of the case the appellant has overstated the findings of the district court in an earlier companion criminal proceeding. The finding of the district court in the criminal case was that the facts did not constitute violations of Section 1 of the Sherman Act without evidence that the advantage acquired by the defendants was more than a normal and reasonable reward to a patentee. However, appellant overstates the court's finding in discussing the so-called "oral agreement". (J. S. 4.) The district court in the companion criminal case did not refer to any agreement but talked only in terms of a "continuing arrangement".[2]

---

[2] The applicable part of the district court's opinion in the criminal case is found at 214 F. Supp. 776, 777 and reads as follows:

"Simplifying, or perhaps over-simplifying, the Government has established the following, at least *prima facie*: Huck owns patents and has entered into a continuing arrangement with Townsend under which the patented product, a metal fastening device, is manufactured and sold at prices determined by Huck, no other firm is permitted to engage in the manufacture and sale of the product, and each firm is entitled to exploit improvements and related products developed by the other."

Appellees most serious quarrel with appellant's statement of the case is that without ever challenging the findings of fact of the district court, it largely ignores those findings while quoting at length from conflicting or contrary testimony and documentary exhibits introduced below by appellant. The appellant's statement of questions presented clearly indicates that appellant takes the position that the judgment is incorrect as a matter of law, without the need to challenge the findings of fact. Appellant then proceeds to state as facts many of the inferences which it sought to establish below and which were rejected by the district court.

As an example, in discussing Townsend's request for a lockbolt license from Huck, appellant makes a statement as to Townsend's state of mind or intention in requesting a lockbolt license from Huck shortly after the latter part of 1950. (J. S. 6.) This state of mind or intention was never discussed by the district court in its finding of fact No. 12 relating to that period of time. (J. S. 10a-11a.) The Government also goes on to refer to the state of mind or intention of Huck in considering granting a lockbolt license to Townsend in 1953 and to Townsend's state of mind or intentions in seeking such a license. (J. S. 6-7.) In connection therewith appellant has not only stated matters not part of findings No. 12 and 13 but has failed to mention the specific finding No. 13 that Huck was motivated by the demand of its customers for a second source of supply and delay in meeting delivery dates specified by its customers and that Townsend was motivated by a desire to obtain an exclusive license.

As noted in the appellant's statement, the appellees do not agree that after the first two years the license in question was conditioned on the licensee, Townsend, maintaining prices fixed by Huck, the licensor, and both cases (criminal and civil) were concluded without the necessity of ap-

ellees putting in any testimony. However, a Government itness testified that there was an oral agreement to ex- nd the two-year period during which the written license greement between appellees was to be exclusive and pro- de for first sale price maintenance. (Findings 15-16, J. S. 3a-15a). There was no finding that the alleged oral agree- ent was established by the evidence or that Huck actually ictated the prices charged by Townsend, but the dismissal f the complaint is apparently based on the assumption that here would have been no violation even if the alleged oral greement had been established. Accordingly, for purposes f this appeal existence of the oral agreement will be as- umed.

Appellees' position is that the judgment of the district ourt is clearly correct, that it is fully supported by the vidence of record and decisions of this Court, and that no ubstantial question based upon the record or substantial uestion of public importance is presented by the appeal.

SUMMARY OF ARGUMENT

I. With Respect to The Government's Urging That This Court Should Reconsider and Overrule United States v. General Electric Company, 272 U.S. 476 (1926)

With respect to the first question presented in the Government's Jurisdictional Statement, appellees' argument more fully shows the following:

This is Not a Proper Case to Reconsider And Determine Whether or Not General Electric Should Be Overruled Because the Government Expressly Disclaimed and Waived That Issue in the Court Below

(1) In the district court, on pre-trial, the Government expressly disclaimed and therefore waived the issue whether *General Electric* should be overruled. It joined issue with appellees on whether this case fell within or outside the facts and law of *General Electric*. Appendix C to the Government's Jurisdictional Statement, at page 38a, contains an irrefutable record statement by the Government that "it is not attempting to have the doctrine in the General Elecric case overruled" and that "the doctrine is still good law".

(2) By seeking to raise for the first time in this appeal the question whether *General Electric* should be overruled, the Government has completely changed the theory of its case as argued and briefed below. This is contrary to the fundamental principle generally applied by this Court that it will not consider questions which were not raised below. This principle is especially applicable when, as here, the appellant departs from the joinder of issues on which it de-

liberately chose to base its case in the district court from which this appeal is taken directly to this Court under the Expediting Act.

Such a shift in the theory of the Government's case is clearly prejudicial to the appellees. This surprise tactic on appeal violates the rudimentary principles of fair play and the orderly process of adjudication in Anglo-American jurisprudence. It is obvious that preparation for trial and the trial of any case are inherently governed by the joinder of issues.

It is untenable for the Government to assert that appellees were not prejudiced because they still have occasion to present defenses, since the court below granted the appellees' motion to dismiss at the close of the Government's case-in-chief. Appellees consented to a stipulation that the Government could offer in this civil suit the record in the prior criminal proceeding only after the Government expressly disclaimed an intention to seek the overruling of *General Electric*.[3] Beyond that, it is elementary that the substantive, procedural and evidentiary approach to *any* case, including the nature of the cross-examination of witnesses, is governed by the joinder of issues at the trial level. The whole purpose of the pre-trial, designed to identify the issues, is negated if an appellant can change its basic theory for the first time on appeal after losing its case on another theory it elected in the trial court.

---

[3] The pretrial hearing at which the waiver was made was held on October 15, 1962 (J. S. pp. 33a-38a) and the stipulation was signed by counsel for the parties on several dates in March and April, 1963. The stipulation is reproduced *infra*, p. 39.

II. The General Electric Decision Should Not Be Overruled, Even Apart from the Government's Waiver of That Issue Below

Apart from the Government's express disclaimer, it would be inappropriate on the record of this case to reconsider and overrule *General Electric*.

(1) *General Electric's ratio decidendi*, formulated in 1926 by a unanimous Court, is a sound and proper accommodation of the patent laws and antitrust laws when construed *in pari materia*, as the majority of this Court stated and approved in its recent majority opinion in *Simpson v. Union Oil Company*, 377 U. S. 13 (1964).

(2) Businessmen and their counselors have justifiably relied upon the rule of *General Electric*. This is not a proper case to depart from the rule of *stare decisis* deeply imbedded in American jurisprudence. Only in exceptional circumstances has this Court overruled a long-standing precedent; and none of the grounds upon which this Court has overruled its prior decisions exists in this case. The Government has failed to show that changing conditions, the lessons of experience or inconsistent later decisions of this Court require reconsideration and overruling of *General Electric*.

(3) Whether regarded as a principle judicially created by a unanimous Court in the 1926 *General Electric* case, or as a matter primarily of Congressional concern, it is noteworthy that Congress has not responded to numerous bills introduced in the 1940's to outlaw the first sale price limitation in a patent license as sanctioned by *General Electric*, as well as other limitations, such as the field of use limitation, also sanctioned by this Court in *General Talking Pictures v. Western Electric Co.*, 305 U. S. 124 (1938).

More significantly, when the Congress in 1952 codified the patent laws, with revisions of certain prior provisions and addition of new provisions, it did not seek to disturb the *General Electric ratio decidendi.*

III. With Respect to the Government's Alternative Ground That the Huck-Townsend License Arrangement Goes Beyond General Electric and Violates the Sherman Act

The District Court Correctly Held That The Huck-Townsend Patent Arrangement Is In All Material Respects Within The Sanction of General Electric

On the second question presented by the Government, the district court correctly held that the Huck-Townsend exclusive patent license here in issue is in all material respects within the sanction of *General Electric.*

The findings of fact of the district court, not directly challenged by the Government, are to the effect that the alleged oral agreement involves nothing more than an extension of the term of the exclusive license to Townsend so long as Townsend continued to observe Huck's prices. (Finding 16, J. S. 15a.) As shown more fully in appellees' argument, the Government is attempting to challenge the legality of the grant of an exclusive license.

The Government Misconceives The Inherent Nature Of An Exclusive License

This Court and lower federal courts have never questioned the right of the patentee to grant an exclusive license —in this case exclusive of all others than the patentee itself—so long as the patentee acts individually in the exercise of his independent and untrammelled judgment.

The oral agreement to which the court below refers in its Finding 16 is in legal effect only an extension of the original two-year exclusive license to Townsend. From this exclusive license stems the lawful consequence that, so long as the exclusive license remains in effect, the patentee must individually refrain from licensing others. No antitrust violation has ever been held by this Court or a lower federal court to arise from an exclusive license *per se*. *General Electric at the very least* sanctions a first sale price limitation in a *single license*. In this case, the question whether a plurality of non-exclusive licenses, each containing a first sale price limitation, is also within the sanction of *General Electric*, is not in issue. The only price limitation in this case is in the exclusive license by Huck to Townsend.

ARGUMENT

I.

THIS IS NOT A PROPER CASE IN WHICH TO RECONSIDER AND DETERMINE WHETHER OR NOT GENERAL ELECTRIC SHOULD BE OVERRULED BECAUSE THE GOVERNMENT EXPRESSLY DISCLAIMED AND WAIVED THAT ISSUE IN THE COURT BELOW

The Government's Jurisdictional Statement anticipates this contention of the appellees but seeks to avoid the frequently repeated general principle of this Court that it will not consider on appeal questions not raised by appellant below.

Appellees note first that the Government does not challenge the supplement to the record which the district judge made with his comment that:

> "The interests of justice will best be served if a full and complete record of all proceedings in the

trial court is available to the appellate court upon its review of the case". (J. S. 37a.)

The Government Affirmatively Disclaimed Attack Upon General Electric, Which it Asserted Was "Still Good Law"

The essence of this supplemental amendment to one of the pretrial orders, set forth in footnote 10 of the Government's Jurisdictional Statement, and at page 39a of its Appendix C, consists of two unequivocal representations on behalf of the Government in the court below. One is that the Government "is not attempting to have the doctrine set in the *General Electric* case overruled and stated only that facts in this case do not fall within that doctrine". (J. S. 38a.) The other is the immediately following assertion by Government counsel "that the [General Electric] doctrine is *still good law* but does not apply as the actions in this case are illegal without application of the doctrine * * *" (emphasis supplied). (J. S. 38a.)

These categorical representations were later supplemented by a letter from the then Assistant Attorney General in charge of the Antitrust Division of the Department of Justice (J. S. 39a-40a) in which he dealt solely with the Government's theory that "the facts of this case fall outside the facts and law of *United States v. General Electric* * * *". (J. S. 41a.)

It is difficult to imagine how statements as unambiguous as those above quoted can be construed otherwise than as an express disclaimer and waiver of the Government's intention to make the overruling of *General Electric* an issue in this case.

Faced with these irrefutable statements of record, the Government's Jurisdictional Statement, by way of con-

fession and avoidance, seeks to persuade this Court that the foredoing addition to the pre-trial order "ought not preclude the plenary consideration by this Court of the important question whether *General Electric* should be overruled". Appellees recognize that there is no jurisdictional restriction upon the Court's consideration of new questions, either *sua sponte* or otherwise, in exceptional circumstances. Appellees submit, however, that, in the circumstances of this case, there are no compelling considerations for injecting for the first time on appeal an issue deliberately disclaimed and waived by the Government below.

First, this Court in promulgating the Federal Rules of Civil Procedure intentionally provided several means by which the issues to be tried could be defined and limited in the interests of an orderly trial and disposition of the controversy. Among the procedures provided for this purpose is the pretrial hearing and the pretrial order for the pupose of defining and limiting the issues for trial. Rule 16 specifies that "such order when entered controls the subsequent course of the action, unless modified at the trial to prevent manifest injustice." Thus, the rule in limiting the issues to be tried limits the evidence which may be offered.

The spirit and intent of this portion of Rule 16 has been consistently followed by the lower courts, even in cases involving the United States.[4] Accordingly, the question

---

[4] *Washington v. General Motors Acceptance Corp.*, 23 F.R. Serv. 16.32 Case 2 (S.D. Fla. 1956);
Montgomery Ward & Co., v. The Northern Pacific Terminal Company of Oregon, 17 F.R.D. 52 (D. Ore. 1954);
Sinclair Refining Company v. George L. Howell, 222 F. 2d 637 (5th Cir. 1955);
United States v. An Article of Drug, etc., Acnotabs, 207 F. Supp. 758 (D. N.J. 1962);
Frank v. Giesy, 117 F. 2d 122 (9th Cir. 1941);

(Continued on next page)

whether or not the *General Electric* doctrine is good law was not an issue in this case; was not tried or argued below; and is not properly before this Court.

Even where the issues have not been expressly limited by pleadings or otherwise, this Court has generally refused to pass on matters not raised or considered below.

In *Duignan v. United States,* 274 U. S. 195 at 200 (1927), the Court stated:

> "This Court sits as a court of review. It is only in exceptional cases coming here from the federal courts that questions not pressed or passed upon below are reviewed".

See also *Wong Tai v. United States,* 273 U. S. 77 at 78 (1927) (constitutionality of statute raised for the first time on appeal not considered); and *Helvering v. Cement Investors, Inc.,* 316 U. S. 527 at 535 (1942), where the Court said: "We will not consider here for the first time the question whether a tax liability may have been incurred under Section 112 (a) by reason of the earlier transaction, a question not fairly within the issues as framed by the Commissioner and not decided below". The long established nature

---

(Continued from preceding page)

Clark v. United States, 13 F.R.D. 342 (D. Ore. 1952);
Fowler v. Crown-Zellerbach Corporation, 163 F. 2d 773 (9th Cir. 1947);
Daitz Flying Corp. v. United States, 4 F.R.D. 372 (E.D. N.Y. 1945);
United States v. Fallbrook Public Utility District, 165 F. Supp. 806 (S.D. Cal. 1958);
United States v. E. I. DuPont de Nemours and Co., 10 F.R.D. 618 (D. Del. 1950);
United States v. Shubert, 15 F.R. Serv. 33.333, Case 1 (S.D. N.Y. 1951);
United States v. E. I. DuPont de Nemours & Co., 11 F.R.D. 308 (D. Del. 1951).

of this limitation is attested by a like ruling as far back as *Ewing v. Howard,* 7 Wall. 499 (1869), where it was held that the defense of usury could not be raised in the Supreme Court for the first time. See also *Virtue v. Creamery Package Mfg. Co.,* 227 U. S. 8 (1913) and *Virginian Rwy. Co. v. Mullens,* 271 U.S. 220 at 227 (1926), where this Court emphasized the importance of joinder of issue as a factor against considering a new theory for the first time on appeal.

This Court has shown concern about prejudice to the party who tried the case on one theory in the court below and suddenly found himself facing for the first time on appeal another theory introduced by the Government. In *Giordenello v. United States,* 357 U. S. 480 (1958), the Government originally argued in the court below that the arrest was justified because the warrant was valid. Before the Supreme Court the Government argued that even if the warrant was invalid, the arrest itself was valid because based on probable cause that a crime had been committed. The Court at page 488 stated:

> "We do not think that these belated contentions are open to the Government in this Court and accordingly we have no occasion to consider their soundness. To permit the Government to inject its new theory in the case at this stage would unfairly deprive petitioner of an adequate opportunity to respond".

In *Giordenello* the Court further pointed out that the petitioner might otherwise have pursued a different line of cross-examination.

Cf. *Peck v. Heurich,* 167 U. S. 624 at 629 (1897), where this Court observed that "A judgment cannot be affirmed upon a ground not taken at the trial, *unless it is made clear beyond doubt that this could not prejudice the rights*

of the plaintiff in error". (Emphasis added.) The instant case is clearly not one where the Government could "beyond doubt" show that appellees herein were not prejudiced by the Government's express waiver below and the resulting joinder of issue in the trial court.

The salutary rule against consideration on appeal of an issue not raised below becomes even more manifestly sound where, as in this case, the Government expressly waived the issue below.

In *Helvering v. Wood,* 309 U. S. 344 (1940), the Government for the first time on appeal argued that a certain section of the Revenue Act sustained the tax in question. The Court said at 349:

> "For a wholly different reason, petitioner's argument based on Section 22 (a) must fail. The Board of Tax Appeals purported to place its decision solely on Section 166 and 167 of the Act. Petitioner in his assignments of error mentioned specifically only Sections 166 and 167, not Section 22 (a). In his brief before the Circuit Court of Appeals petitioner expressly waived *reliance* upon any section other than Section 166 * * *. In view of these facts, *especially the express waiver below,* we do not think that petitioner should be allowed to add here for the first time another string to his bow. * * * To open here for the first time *and in the face of the express disclaimer* an inquiry into the broader field is not only to deprive this Court of the assistance of a decision below but *to permit a shift to ground which the taxpayer had every reason to believe was abandoned* * * *" (Emphasis added.)

In distinguishing *Helvering v. Wood, supra,* and finding special circumstances warranting consideration on appeal of an issue not raised below, Justice Black, speaking for the Court in *Hormel v. Helvering,* 312 U. S. 552 stated at 557 (1941):

> "* * * We held in *Helvering v. Wood*, 309 U.S. 344, 348-349, that the Government could not present in this Court as a wholly new issue the applicability of Section 22 (a). But we there especially relied upon the fact that the Government, when the case was before the Circuit Court of Appeals *had made an express waiver* of any reliance on 22 (a)." (Emphasis added.)

The necessity of defining and limiting issues has special relevance to antitrust cases where avoidance of undue protraction of trial has brought about customary resort to pre-trial discovery, to pre-trial conferences and pre-trial orders designed to identify and narrow the issues. Indeed, the Government's specific disclaimer of intention to seek an overruling of *General Electric* and its express acknowledgment that the case was "still good law" were avowedly for the purpose of apprising appellees of the Government's basic theory of its case and thus "to aid them in preparation for trial" (Pre-Trial Order, J. S. 34a). Despite these matters of record, the Government would negate the very objectives of orderly pre-trial by changing horses on appeal to ride toward the goal of persuading this Court to overrule *General Electric*.

In this connection, it is sheer sophistry for the Government to argue that appellees were not prejudiced since on grant of their motion to dismiss made at the conclusion of the Government's case, appellees "have not yet had occasion to adduce evidence in support of their defenses". (J. S. Footnote 10 at p. 11.) It is inherently prejudicial to any party to prepare for and conduct a trial on one issue and then have the issue changed on appeal. The Government statement ignores the fact that the criminal trial and the stipulation that the Government could offer in this civil suit the record of its evidence in the criminal proceeding

both occurred *after the Government had disclaimed any intention to attack the validity of General Electric.* It cannot be presumed that the Government's witnesses would have been cross-examined in the same manner in the absence of the waiver or that the record of the criminal case would have been stipulated at all in that event.

The Government's concession that in this case it is only seeking prospective injunctive relief against further enforcement of the restrictions in the Huck-Townsend license does not eliminate the serious prejudicial effects upon appelles if *General Electric* should be overruled. Both Huck and Townsend would be exposed to liability in treble damage suits.

While Lower Courts Generally Follow Supreme Court Decisions, The Government Could have Challenged General Electric As Allegedly No Longer A Vital Precedent

The Government seeks to convince this Court that the pre-trial statements on behalf of the Government of record in this case, when viewed in the light of the circumstances in which they were made, "merely expressed the obvious point that the government could not properly have urged the district court not to follow General Electric let alone to 'overrule' it". The Government then cites various cases in the lower federal courts in support of its generalization that " * * * until this court has spoken its outstanding decisions are undeniably binding upon the lower courts". (J. S. 11, Footnote 10.)

Appellee recognizes that district courts generally and properly must as a matter of law feel obligated to follow and apply the decisions of the Supreme Court or of a

Court of Appeals in the same district if the particular question has not yet been adjudicated by the Supreme Court. But when the Government intends to ask this Court to overrule one of its earlier decisions and the defendants ask prior to trial what the position of the Government is with respect to the doctrine announced in the earlier decision, the Government must set forth its position and its intentions so that the defendant can properly prepare for trial and the trial court can determine what evidence is admissible. Otherwise this Court's whole concept of pre-trial procedures for limiting and defining issues is violated.

Moreover, it is an over-generalization for the Government to assert the automatic assumption that a lower court will *invariably* feel obliged to follow a Supreme Court decision. In the instant case, this automatic assumption is especially questionable in view of the Government's flat statement that "*General Electric* has long ceased to be a vital precedent". (J. S. 17.) If the Government really believes that *United States v. Line Material*, 333 U. S. 287 (1948), served notice "that General Electric was no longer a reliable precedent", then by its own assertion it is admitting that there was no excuse for not raising that issue in the court below.

II.

THE GENERAL ELECTRIC DECISION SHOULD NOT BE OVERRULED, EVEN APART FROM THE GOVERNMENT'S WAIVER OF THAT ISSUE BELOW

Appellees strenuously dispute the Government's position that "General Electric rested upon an erroneous view of the nature of the patent monopoly"; that "General Electric has long since ceased to be a vital precedent"; that it is "out of harmony with other decisions of this Court"; and that it has been a prolific source of confusion and uncertainty". (J. S. 17-18.)

To understand the unsoundness of the Government position it is necessary to consider the background of the *ratio decidendi* of *General Electric*, which for the past thirty-eight years has remained "good law", as the Government expressly stated below, despite repeated unsuccessful efforts of the Government in the 1940's to persuade this Court to repudiate it.

The Patent Laws and The Antitrust Laws Are Construed By This Court in Pari Materia and The Antitrust Laws are Accordingly Modified Pro Tanto

The latest expression of this Court on this subject is in *Simpson v. Union Oil Co.*, 377 U. S. 13 (1964), where Justice Douglas speaking for the Court, placed *General Electric* in perspective in these comments:

> "The Court in that case particularly relied on the fact that patent rights have long included licenses 'to make, use, and vend' the patented article 'for any royalty, or upon any condition the performance of which is reasonably within the reward which the patentee by the grant of the patent is entitled to secure.' *Id.*, 272 U.S. at 489, 47 S. Ct. at 196, 71

L. Ed. 362. Congress in establishing the patent system included 35 U.S.C. Sec. 154, which provides in part 'Every patent shall contain a short title of the invention and a grant to the patentee, his heirs or assigns, for the term of seventeen years, of the right *to exclude others from making, using, or selling* the invention throughout the United States, referring to the specifications for the particulars thereof.' (Italics added by Court).

"'The right to manufacture, the right to sell, and the right to use are each substantive rights, and may be granted or conferred separately by the patentee.' *Adams v. Burke,* 17 Wall. 453, 456, 21 L. Ed. 700. Long prior to the General Electric case, price fixing in the marketing of patented articles had been condoned (*Bemet & Sons v. National Harrow Co.,* 186 U.S. 70, 22 S. Ct. 747, 46 L. Ed. 1058), provided it did not extend to sales by purchasers of the patented articles. *Adams v. Burke, supra; Ethyl Gasoline Corp. v. United States,* 309 U.S. 436, 60 S. Ct. 618, 84 L. Ed. 852.

"The patent laws which give a 17-year monopoly on 'making, using, or selling the invention' are *in pari materia* with the antitrust laws and modify them *pro tanto.* That was the *ratio decidendi* of the General Electric case. See 272 U.S., at 485, 47 S. Ct. 192, 71 L. Ed. 362. We decline the invitation to extend it."

Appellees submit that this aptly sums up the Congressional intention in the accommodation of the patent laws to the antitrust laws in harmony with the Constitutional purpose of promoting the progress of science and the useful arts. The patent laws and the antitrust laws are not inherently in opposition. On the contrary, both sets of laws stem from the paramount public policy of maintaining a healthy competitive economy. Within its appointed orbit,

each of these bodies of law reveals the Congressional design of fostering purposes compatible with private competitive enterprise.

Thus, in reconciling the overriding public interest in promoting progress of science and the useful arts with the private incentive to invent and to invest risk capital in patented inventions, Congress also sought to effectuate the Constitutional purpose of "securing for limited Times * * * to Inventors the exclusive right to their * * * Discoveries". Constitution, Article I, Section 8. This reward to inventors has been characterized as secondary to the primary purpose of promoting technological progress. It could be characterized in a more meaningful sense as the instrument by which the primary purpose is effected, because anything which weakens the incentive provided by the patent system renders it less effective for its primary purpose. Thus, unless the patent laws are construed *in pari materia* with the antitrust laws, the essence of the patent grant as a right to exclude all others from making, using, or selling the patented invention would be rendered nugatory since the legitimate reward of the patentee would then be branded as an antitrust violation.

The *General Electric ratio decidendi,* formulated by a unanimous Supreme Court in an opinion by Chief Justice Taft, constitutes a sound harmonization of these two sets of laws. In *General Electric* the Court announced as the yardstick for measuring the lawful rights of the patentee, when he acts individually and stays within the scope of the claims of his patented invention, the following fundamental proposition:

> "* * * the patentee may grant a license to make, use, and vend articles under the specifications of his patent for any royalty, or upon any condition

> the performance of which is reasonably within the reward which the patentee by the grant of the patent is entitled to secure". (272 U.S. 476, 489.)

This Case is Factually Like General Electric

The court below concluded that Huck did not secure a reward beyond that to which it was legally entitled as the patent owner within the *ratio decidendi* of General Electric. In so concluding, it correctly found that on its facts, the case at bar is essentially like the General Electric case. The General Electric case was like the instant case in the following material respects:

(a) There was only one patent license with a first sale price limitation. In *General Electric*, while the license to Westinghouse was nonexclusive, it was the only one granted by General Electric with a first sale price limitation. In this case the Huck license to Townsend was exclusive but it is also the only license granted by Huck with a first sale price restriction.[5]

(b) In both *General Electric* and this case the patentee reserved its right to make and sell the licensed patented article concurrently with the licensee with whom it competed. This factor is precisely the ground upon which the Court sanctioned the first sale price restriction. Chief Justice Taft said:

> "One of the valuable elements of the exclusive right of a patentee is to acquire profit at the price at which the article is sold. The higher the price, the

---

[5] Also in *Bement v. National Harrow Co.*, 186 U.S. 70 (1902), only a single license was before the Court. The Court was not called upon to decide more than whether a first sale price limitation in that license was valid.

> greater the profit, unless it is prohibitory. When the patentee licenses another to make and vend *and retains* the right to continue to make and vend on his own account, the price at which his licensee will sell will necessarily affect the price at which he can sell his own patented goods. It would seem entirely reasonable that he should say to the licensee, 'Yes, you may make and sell articles under my patent but not so as to destroy the profit that I wish to obtain by making and selling them myself' • • •". (Emphasis supplied.)

(c) Most importantly, it should be noted that neither *General Electric* nor this case involves a plurality of licenses with a first sale price restriction.[6]

In this case the appellees do not have any occasion to seek an extension of *General Electric* for the obvious reason that the facts in this case are precisely within the bounds of *General Electric.*

The Scope of General Electric Has Been Clearly Defined

General Electric in the 1940's was a subject of controversy not only regarding its soundness but, more significantly, because at that time the scope of the permissible limits of the *General Electric* rule needed clarification. Subsequent cases clearly define its boundaries.

---

[6] This was held improper in *Newburg Moire Co. v. Superior Moire Co.*, 237 F. (2d) 283-284. A factor in this *Newburg* case was the dominance of the market by the patentee and its several licensees. In the instant case the court found (Finding 9 J. S. 10a) that there are other fasteners used and usable for the same purpose as lockbolts and there is no finding that Huck and Townsend dominate the relevant market.

United States v. Line Material Co., 333 U. S. 287 (1948), was one such case. There the Government sought to have this Court overrule *General Electric* but an equally divided Court declined to do so.

In *Line Material*, however, the cross-license between Line and Southern, each of which owned separate but complementary patents, was held in violation of Section 1 of the Sherman Act because, as stated by Justice Reed at p. 311:

> "While the General Electric case holds that a patentee may, under certain conditions, lawfully control the price the licensee of his several patents may charge for the patented device, no case of this Court has construed the patent and anti-monopoly statutes to permit separate owners of separate patents by cross-license or other arrangements to fix the prices to be charged by them and their licensees for their respective products. * * *"

In this case there is no combination of separately owned Huck and separately owned Townsend patents. The Huck-Townsend patent license here in issue covers *only* patents owned by Huck which the Government conceded are *valid* patents. Furthermore, in this case, there are no *plural* patent licenses granted by Huck with a first sale price restriction. In *Line Material* Justice Reed carefully distinguished *General Electric* on its precise facts. Assuming the the validity of the *General Electric* case, he stated that in a single, vertical patent license with a first sale price restriction, "that reasonable restraint accords with the patent monopoly granted by the patent law."

Since *Line Material* this Court has itself demonstrated that the fear that *General Electric* would present "a host of difficult and unsettled questions", as the Government argued in its *Line Material* brief, or "has become a prolific

source of confusion and uncertainty", as the Government now argues, has not been borne out. The course of decisions of this Court in patent-antitrust cases subsequent to *Line Material* and cases in the lower federal courts applying the guides set down by this Court show that courts have had no difficulty distinguishing legitimate arrangements under *General Electric* from conspiracy cases.

By its own presentation and citation of cases the Government has reduced to insignificance its main argument that "* * * *General Electric* is out of harmony with other decisions of this Court which consistently have invalidated restrictive conditions in patent-licensing agreements". (J. S. 18.)

The inherent contradiction in this generalization is easily revealed. *General Electric* has been kept within its constricted bounds precisely because this Court has invalidated retrictive conditions in patent licenses beyond the ambit of General Electric. What the Government is really doing is attempting to rekindle into a flame the embers of a burning issue in the 1940's which this Court itself has relegated to the limbo of the past.

General Electric Is In Complete Harmony With Subsequent Decisions of This Court in Patent Misuse and Antitrust Cases

A summary of the series of decisions of this Court, relied upon by the Government in again urging this Court to repudiate *General Electric* will demonstrate that all of these decisions are consistent and in harmony with *General Electric* when properly construed.

First, appellee thinks it is clear that the patent misuse cases cited by the Government are not in "'a closely related context", as the Government states (J. S. 12), but in an

entirely different context. Since *Motion Picture Patent Co. v. Universal Film Mfg. Co.*, 243 U. S. 502 (1917), this Court has consistently struck down restrictions in patent licenses which had the effect of using a patent to restrain trade in articles not within its scope. These patent misuse cases are irrelevant because neither this case nor the *General Electric* case involve any restraints on trade in unpatented articles.

The Government is also in error in citing a group of patent-antitrust cases[7] as being in support of its generalization that *General Electric* is inharmonious with other decisions of this Court and "a prolific source of confusion and uncertainty".

Appellees have already shown that *Line Material* involved a combination of the separately owned patent rights of two patent owners plus a horizontal price fixing conspiracy between the patentees and their sublicensees, as well as among the sublicensees themselves. This combination and conspiracy is obviously outside the lawful pale of *General Electric.*

In the *Ethyl* case and in the *Univis Lens* case, both *infra,* resale price maintenance was struck down, consistent with *Simpson, supra,* but neither impairs the right of a patentee to control the price of the first sale, which is within the patent monopoly.

---

[7] *United States v. Line Material Co.*, 333 U.S. 287; *United States v. United States Gypsum Co.*, 333 U.S. 364; *United States v. Masonite Corp.* 316 U.S. 265; *United States v. United States Gypsum Co.*, 340 U.S. 76; *United States v. Vehicular Parking, Ltd.*, 54 F. Supp. 828 (D. Del.) cf. *Standard Sanitary Mfg. Co. v. United States*, 226 U.S. 20. See, also, *Ethyl Gasoline Corp. v. United States*, 309 U.S. 436 (price control over one patented product used as a lever to control others). See also: *United States v. Univis Lens*, 316 U.S. 241 is also distinguishable.

The *Masonite* case, *supra,* was one of the horizontal price fixing, quite different from the single vertical patent license sanctioned in *General Electric.*

The two *Gypsum* cases, *supra,* and *United States v. New Wrinkle,* 342 U.S. 371 (1952) were industry-wide licensing and horizontal price fixing arrangements, far different than the single vertical patent license of *General Electric.*

The district court concluded that cases such as those summarized above are distinguishable from *General Electric* and that the instant case is in all material respects within the limited exception of *General Electric.* (Conclusion VII, J. S. 28a-29a.)

This Case Does Not Contain Any of the Factors Normally Present When This Court Overrules Its Prior Decisions

The wisdom of not overruling the *General Electric* case is supported by a review of the history of this Court in overruling decisions since its founding.

The basic factors which have motivated this Court to overrule its prior decisions seem generally to have been one or more of the following three: (1) inconsistent later cases, (2) the lessons of experience and (3) changing conditions.[8] None of the above basic factors is present in this case.

---

[8] See Blaustein & Field, "Overruling" Opinions in the Supreme Court, 57 Mich. L. Rev. 151 (1958) (table of such cases listed in Appendix to this article); Israel, Gideon v. Wainright: the "Art" of Overruling, The Supreme Court Review 211 (1963) (supplementing the table in Blaustein & Field, supra).

As has been shown above, *General Electric* is not "out of harmony" with other decisions of this Court and, therefore, one of the basic grounds upon which this Court has been disposed to reconsider and overrule a prior precedent —that the prior precedent is in conflict with or inconsistent with the later precedents—is lacking. By its own presentation the Government has demonstrated that this Court has been astute in striking down every genuine patent misuse and antitrust abuse of patents when, on the facts, the conduct of the defendants strayed from the orbit of the *General Electric* case. The later precedents of this Court are entirely consistent with the *General Electric* case, since they struck down only licenses which extended the scope of the rule.

Since *Line Material,* the decisions of this Court have demonstrated its judicial perceptiveness in striking down as patent misuse or antitrust violation, or both, departures from the legally permissible limits of *General Electric.* There is, therefore, no basis, from this judicial history, for the Government's protestation that its experience with the operation of the *General Electric* rule since Line Material "has further convinced us of the unsoundness of that decision." (J. S. 10.) There is nothing here to indicate the nature or validity of the Government's "experience" to which it refers.

There is likewise no evidence of any changing conditions which would prompt the overruling of the *General Electric* doctrine. There is no evidence comparing the conditions of 1926 with the conditions of 1963, when this case was tried. In fact, as pointed out hereinafter, any change has been in favor of continuing the rule, since for thirty-eight years reliance has been placed upon it.

The General Electric Decision Has Been Justifiably Relied Upon By Businesses

The fact that a decision of this Court has been relied upon in business transactions for many years may be taken into consideration in weighing the propriety of overruling that earlier decision. The *General Electric* decision has withstood all attacks for about thirty-eight years. While in many cases, this Court and lower courts have refused to extend its scope, it has never been overruled and still remains the law of the land.

It is suggested by the Government that the *General Electric* decision should no have been relied upon in business transactions after the *Line Material* decision, in which an equally divided Court refused to overrule it. (J. S. 17.) It must be remembered, however, that the decision was *not* overruled. Businessmen are entitled to and have relied on the cases of this Court which have not been overruled. Furthermore, since *Line Material* the decision in *General Electric* has been followed by a number of lower courts in upholding licensing arrangements.[9] The very existence of these cases in the lower courts gives some indication of the number of businessmen who have relied on the *General Electric* doctrine since the *Line Material* case in 1948.

---

[9] *Prestole Corporation v. Tinnerman Prod.*, 271 F. 2d 146 (6th Cir. 1959); *Westinghouse Electric Corp. v. Bulldog Eectric Products Co.*, 179 F. 2d 139 (4th Cir. 1950); *Glen Raven Knitting Mills v. Swanson Hosiery Mills*, 189 F. 2d 845 (4th Cir. 1951); *Sunbeam Corp. v. Wentling*, 192 F. 2d 7 (3rd Cir. 1951); *Columbia Pictures Corp. v. Coomer*, 99 F. Supp. 481 (E. D. Ky. 1951); *Ronson Patents Corp. v. Sparklet Devices Inc., et al.*, 112 F. Supp. 676 (E. D. Mo. 1953).

The Government's Economic Analysis of the Alleged Effects Of General Electric is Devoid of Empirical Evidence, Being Based on Mere A Priori Assumptions

Appellee next submits that the Government, having failed to show that *General Electric* runs counter to Constitutional purposes or the enacted Congressional patent laws, by condoning either patent misuse or antitrust violation, shifts to *a priori* assumptions in questioning that the first sale price limitation in a patent license should be a part of the reward to which the patentee is entitled, as held in *General Electric.* No empirical evidence is adduced by the Government in support of the abstract and hypothetical situations it discusses at pages 14-16 of its Statement.

Among the questions that call for empirical data are the following: Is there a large or small volume of commerce involved in patent licenses containing a first sale price limitation in a single license? Is the first sale price so fixed any greater than that which would result from a high royalty rate if it were not coupled with a first sale price restriction? To what extent would a patentee be disposed to refrain from licensing even one other competitor if he wished also to make and sell the licensed patented article? Is the first sale price limitation in a single patent license designed merely to protect the competing patentee against destructive price cutting in the sale of the patented device by his single licensed competitor rather than designed to forestall competition generally? Would the overruling of *General Electric* result in resort to trade secret protection on a larger scale than is now the case?

The Government points to alternatives from which a patentee may elect to gain profit other than through a first sale price limitation in a patent license, but none of these alternatives is, in the view of appellees, in the public interest.

Certainly the public interest is not advanced by forcing the patentee to sell or to assign his patent. (J. S. 14.) The purchaser as sole producer could still set his own price. Furthermore it is purely hypothetical and speculative to say that a patent can be marketed in the above way as readily as by a license to one other party with a first sale price limitation. There may be no interested prospective purchaser or assignee and a license may be the only practical alternative.

Next, the Government states that the patent owner "may refrain from licensing and reap his reward in the form of manufacturing profits." (J. S. 14.) This abstract proposition is plainly a mere assumption that the public interest would be advanced by compelling the patentee to be the sole manufacturer of the patented article. The probabilities are that public interest would be advanced by inducing a patentee to create a needed second manufacturing source of the patented article, when the patentee prefers to license another for that purpose. Huck did precisely that in this case.

Equally untenable is the Government's argument to the effect that public interest would be advanced by restricting a patentee, who elects to license a competitive producer, to the patentee's right to exact from the competitor a royalty as high as he is willing to pay. It is an unsupported and unsupportable assumption that the public might benefit from the superior efficiency of a competitor of the patentee

in overcoming the burden of a high royalty rate to sell his output at a lower price than the one that patentee might set. It is more probable that the licensee could not undersell the licensor because he could not absorb the high royalty.

It is evident that the broad policy questions pertaining to a reconsideration of General Electric cannot be resolved on mere theoretical reasoning advanced by the Government. At stake are not only the private interests of parties such as Huck and Townsend, but more importantly the public interest in maintaining the minimum of exclusive rights of patentees, involving as they do both the preservation of incentive to invent and high risk capital investment incentives for costly research and development.

Whether General Electric Should Stand as a Precedent or Be Rejected is For Congress To Determine

This brings appellee to the point that, even though *General Electric* may be regarded as a judicial interpretation, carving out an exception to the antitrust laws, it is today a doctrine that should be changed only if the Congress so elects. Numerous bills were introduced in Congress during the 1940's proposing to outlaw patent license restrictions of the type sanctioned by *General Electric*.[10] None of them was acted upon.

Moreover, in 1952, when Congress enacted the Patent Code, 35 U.S.C., it did not enact any prohibition against patent licenses containing restrictions such as are sanc-

---

[10] S. 2730, 77th Cong., 2d Sess. (1942); S. 2491, 77th Cong., 2d Sess. (1942); H.R. 7713, 77th Cong., 2d Sess. (1942); H.R. 109 78th Cong., 1st Sess. (1943); H.R. 1371, 78th Cong., 1st Sess. (1943); H.R. 3874, 78th Cong., 1st Sess. (1943); H.R. 97, 79th Cong., 1st Sess. (1945); H.R. 3462, 79th Cong., 1st Sess. (1945); S. 2482, 79th Cong., 2d Sess. (1946); S. 72, 80th Cong., 1st Sess. (1947).

tioned by General Electric. To the contrary, the legislative history of the Patent Code shows that the prime intention of Congress was to strengthen, rather than to weaken patent rights.[11]

Overruling General Electric Would Open The Floodgates to Outlawing Other Valid Restrictions In Patent Licenses

The Government's focus upon the first sale price restriction validated by *General Electric* overlooks the far-reaching other consequences which would flow from overruling *General Electric*. The *ratio decidendi* of that case comprehends more than a first sale price restriction in a patent license. The reasonable reward was interpreted by this Court in *General Talking Pictures Corp. v. Western Electric Co.*, 305 U.S. 124 (1938), to sanction also a field of use restriction. In his majority opinion of the Court, Justice Brandeis specifically stated that this use restriction is of the character sanctioned by *General Electric*, from which he quoted with approval. He also stated at p. 127, "That a restrictive license is legal seems clear", citing this Court's early case of *Mitchell v. Hawley*, 16 Wall. 544 (1872) and that "The practice of granting licenses for a restricted use is an old one", citing *Rubber Co. v. Goodyear*, 9 Wall. 778. There would appear to be no rational basis for distinguishing a first sale price restriction from other common patent license restrictions such as restrictions as to territories, quantities, fields of use or types of products.

---

[11] See Hearings on Patent Law Codification and Revision before Subcommittee No. 3, Serial No. 9, House Committee on the Judiciary, 82nd Cong., 1st Sess. (1951).

In this case the Government is attacking only the first sale price patent license limitation sanctioned by *General Electric*. It is not necessary in this case to inject a discussion of the other patent license restrictions mentioned above except to point out that once *General Electric* is reconsidered on the first sale price aspect of a patent license, the Court is inviting a Government attempt to have invalidated the other types of license limitations long held valid and within the ambit of *General Electric*.

III.

THE DISTRICT COURT CORRECTLY HELD THAT THE HUCK-TOWNSEND PATENT LICENSE ARRANGEMENT IS IN ALL MATERIAL RESPECTS WITHIN THE SANCTION OF GENERAL ELECTRIC

The district court's conclusion was that upon the evidence "the case at bar is in all material aspects the same as and rule by the decision in *U. S. v. General Electric Co.* * * *" and that the Government "failed to show that the patent arrangements between Huck and Townsend were designed to or did secure a reward beyond that to which Huck as the patent owner was legally entitled". (Conclusions VII and IX, J. S. pp. 28a, 29a.)

This conclusion of the district court is challenged by the Government in the Jurisdictional Statement almost as an afterthought to its effort to have the *General Electric* doctrine overruled. The Government's alternative argument is that the price maintenance agreement was in return for the right in the licensee to restrain the patentee from issuing further licenses. However, the Government's statement of this issue makes it quite clear that the effect of the asserted agreement between Huck and Townsend is no different than would be the granting of an exclusive li-

cense to Townsend for the life of the patents. The grant of an exclusive license in itself restrains the patentee from granting further licenses under his patents.

The district court correctly concluded (Conclusion I, J. S. 25a) that an exclusive license in no way violates the Sherman Act. Neither this Court nor any lower federal court has ever held to the contrary. What the Government overlooks is that inherent in the grant of an exclusive license to one person, or to that person except for the patentee himself, is an undertaking by the patentee not to license others so long as the exclusive license is in force.

If it be accepted that a patentee may grant an exclusive license reserving the right to compete with its licensee, and it further be accepted that the *General Electric* doctrine as to first sale price maintenance is sound where the license is non-exclusive, is there any basis for holding that an exclusive license may not contain a first sale price maintenance provision where the patentee reserves the right to sell the patented devices? What are the adverse consequences of such an agreement? Insofar as it may be said to involve a restraint against the grant of another license it is no different than any exclusive license. Moreover that restraint, if it be one, has no different consequences in an exclusive agreement containing a price maintenance clause than in a case like *General Electric* where there was only one non-exclusive license containing a price maintenance clause. Actually, in the light of the cases holding multiple non-exclusive price maintenance licenses to be objectionable, a price maintenance license which is exclusive serves to insure against the evil of multiple licenses of the same type.

What the Government confuses is a situation, such as is here presented, where an exclusive patent license inher-

ently and by its very nature obligates the patentee during the existence of the exclusive license not to license others, and a situation where the patentee delegates to another the power to veto the granting of other licenses by the patentee.

Besser Manufacturing Co. v. United States, 96 F. Supp. 304 (E. D. Mich. 1951), affirmed, 344 U.S. 444 (1952), is clearly not apposite to this case. In *Besser* the Government did not dispute the validity of the exclusive license as such. It challenged a provision in a license whereby the two independent individual patentees covenanted that they would not grant any other license under their patents without joint *written consent of Besser and Sterns*, the joint exclusive licensees. This gave Besser and Stearns a veto power over the grant by the patentees of a license to any other party. In such circumstances, it is understandable that the district court in *Besser*, while recognizing that an exclusive license as such would be lawful, held that a *horizontal* agreement or combination between the two patentees and the two exclusive licensees, Besser and Stearns, that no further licenses would be granted without the consent of the licensees was beyond the protection of the patent grant and violated the Sherman Act. It is also to be noted that in *Besser* the entire relevant industry was completely dominated by the two exclusive licensees.

In contrast the patentee in the instant case, Huck, acting independently in the sole exercise of its own discretion, granted Townsend an exclusive license, at first for two years and then, if the Looker testimony is to be accepted, extended the exclusive license for the life of the relevant Huck patents. There was no provision for agreement on other licensees, but simply an inherent incapacity of Huck to grant any other licenses.

United States v. Krasnow, 143 F. Supp. 184, affirmed 355 U.S. 5, is another case involving collaboration of licensor and licensee in the selection of other licensees. Moreover, it involved a flagrant attempt to create a monopoly based on questionable patents which were used for harassing purposes but never put to the final test of litigation. This contrasts with the present case, in which there is no provision for agreement on other licensees, and the validity of the basic Huck patents covered by the license, is conceded, having been litigated and held valid in a fully contested infringement action. (Finding 12, J. S. 10a.)

In sum, without attacking the findings of fact of the court below on this phase, the Government apparently argues that an exclusive license with a first sale price limitation is *per se* beyond the scope of *General Electric*. If, as seems clear *General Electric* sanctions a first sale price limitation in a purely vertical patent license arrangement between the parties thereto, the "minimal scope" of *General Electric* clearly must sanction such a price limitation where, as in this case, there is only a single and exclusive license with such a first sale price restriction. In *General Electric*, while the General Electric license to Westinghouse was actually non-exclusive, that license was the only one which contained a first sale price limitation. In both cases the patentee reserved the right to compete with the single licensee and hence needed the price limitation to protect his due reward as patentee.

CONCLUSION

As to the first question presented by the Government this is not a proper case for reconsidering *General Electric* for the purpose of determining whether or not it should be overruled. To hold otherwise would be to permit a

complete reversal of position by the Government, to the prejudice of appellees, in a situation where there are no extenuating factors. Moreover, we submit that the rule that the Government objects to, is indeed sound, and that any change therein at this date is for the Congress.

The second question presented by the Government is not significantly different from the first; the decision of the district court on that question is clearly correct.

This appeal therefore presents no questions of substance or which warrant briefs and oral argument. The judgment of the district court should be affirmed.

Respectfully submitted,

JOHN A. BLAIR,
J. KING HARNESS,
JOHN C. STERRITT,
7-141 General Motors Building,
Detroit 2, Michigan,
Counsel for Appellee, Huck Manufacturing Company.

ALBERT M. STERN,
Of Counsel for Huck Manufacturing Company.

THOMAS W. POMEROY, JR.,
S. K. McCUNE,
W. WALTER BRAHAM, JR.,
1130 Oliver Building,
Pittsburgh 22, Pennsylvania,
Counsel for Appellee, Townsend Company.

S. CHESTERFIELD OPPENHEIM,
Of Counsel for Appellees.

October 26, 1964.

ADDENDUM

UNITED STATES DISTRICT COURT
FOR THE EASTERN DISTRICT OF MICHIGAN

UNITED STATES OF AMERICA, *Plaintiff*, v. HUCK MANUFACTURING COMPANY, AND TOWNSEND COMPANY, *Defendants.*	Civil No. 21-791

STIPULATION

It is hereby stipulated among all parties to this action by their attorneys as follows:

The entire Record in the case of *United States v. Huck Manufacturing Company, et al.*, (Criminal Action #39017, E. D. Mich.) is to be placed in evidence in this action subject to all objections appearing therein. Such Record shall constitute the plaintiff's case-in-chief in this action and on which plaintiff will rest. Defendants will move by April 15, 1963 pursuant to the Federal Rules of Civil Procedure for a dismissal of this action on that Record.

Jack L. Lipson	Arthur W. Dickey Harness, Dickey & Pierce	T. W. Pomeroy, Jr.
Charles E. Esherick	Albert M. Stern Stern and Rossier by permission AWD	Kirkpatrick, Pomeroy, Lockhart & Johnson
Attorneys, United States	Attorneys, Huck Manufacturing Company	Attorneys, Townsend Company
Date March 20, 1963	Date April 1, 1963	Date March 21, 1963

INDEX

	Page
Opinion below	1
Jurisdiction	1
Questions presented	2
Statute involved	2
Statement	3
Summary of argument	9
Argument	13
I. This Court's decision in *United States* v. *General Electric Company* that a patentee may fix the sales prices of its licensees is erroneous and should be overruled	13
Introduction	13
A. The *General Electric* holding that price-restrictive licensing is authorized by the patent law was erroneous	18
1. The right to fix a licensee's price is not a lesser included right logically implicit in the patent grant	19
2. The right to fix a licensee's price cannot be justified as a "reasonable" corollary of the patentee's power to exclude	23
3. Price restraints cannot be justified on the ground that they encourage licensing and thereby benefit competition	28

785-229—65——1

Argument—Continued
I. This Court's decision etc.—Continued Page
B. The public interest in overruling *General Electric* outweighs considerations of *stare decisis*..... 38
C. This Court should not decline to overrule *General Electric* because of the district court's finding that the government stated that it was not seeking such overruling..... 46
II. In any event, the agreement that Townsend would follow Huck's prices as long as it remained the sole licensee, and that Huck would grant no other licenses as long as Townsend followed its prices, was an illegal restraint of trade which *General Electric* does not sanction..... 49
Conclusion..... 51

CITATIONS

Cases:
American Equipment Co. v. *Tuthill Bldg. Material Co.*, 69 F. 2d 406..... 42
Associated Press v. *United States*, 326 U.S. 1.. 51
Barber-Colman Co. v. *National Tool Co.*, 136 F. 2d 339..... 42
Bauer v. *O'Donnell*, 229 U.S. 1..... 16
B. B. Chemical Co. v. *Ellis*, 314 U.S. 495.... 15, 24
Bement v. *National Harrow Co.*, 186 U.S. 70... 14, 15, 16, 17, 18, 21
Bloomer v. *McQuewan*, 14 How. 539..... 20
Blount Mfg. Co. v. *Yale & Towne Mfg. Co.*, 166 Fed. 555..... 50
Boston Store v. *American Graphophone Co.*, 246 U.S. 8..... 16

Cases—Continued

	Page
Brulotte v. *Thys*, 379 U.S. 29	49
Carbice Corp. of America v. *American Patents Development Corp.*, 283 U.S. 27	15
Cummer-Graham Co. v. *Straight Side Basket Corp.*, 142 F. 2d 646	42
Ethyl Gasoline Corp. v. *United States*, 309 U.S. 436	15, 39, 43
General Electric Co. v. *Willey's Carbide Tool Company*, 33 F. Supp. 969	42
Henry v. *A. B. Dick Co.*, 224 U.S. 1	15, 21
Hormel v. *Helvering*, 312 U.S. 552	48
International Business Machines Corp. v. *United States*, 298 U.S. 131	15
International Salt Co. v. *United States*, 332 U.S. 392	15
Kendall v. *Winsor*, 21 How. 322	24
Klor's v. *Broadway-Hale Stores*, 359 U.S. 207	51
Leitch Mfg. Co. v. *Barber Co.*, 302 U.S. 458	15
Leeds & Catlin Co. v. *Victor Talking Machine Co.*, 213 U.S. 325	15
Luckett v. *Delpark*, 270 U.S. 496	20
McCullough v. *Kammerer Corp.*, 166 F. 2d 759, certiorari denied, 335 U.S. 813	36
Mercoid Corp. v. *Mid-Continent Investment Co.*, 320 U.S. 661	15, 21
Morton Salt Co. v. *G. S. Suppiger Co.*, 314 U.S. 488	15
Motion Picture Patents Co. v. *Universal Film Mfg. Co.*, 243 U.S. 502	10, 15, 16, 18, 21, 26
Newburgh Moire Co. v. *Superior Moire Company*, 237 F. 2d 283	39, 41
Northern Pacific R. Co. v. *United States*, 356 U.S. 1	19
Pfotzer v. *Aqua Systems, Inc.*, 162 F. 2d 779	36
Standard Oil Co. v. *United States*, 283 U.S. 163	51

Cases—Continued

	Page
Standard Sanitary Mfg. Co. v. *United States*, 226 U.S. 20	16
Straight Side Basket Corp. v. *Webster Basket Co.*, 82 F. 2d 245	42
Straus v. *Victor Talking Machine Co.*, 243 U.S. 490	16
United States v. *Allegheny Ludlum Steel Corp.*, Civ. 45–83, D.N.J.	44
United States v. *American Optical Co.*, Civ. 10–391, S.D.N.Y.	44
United States v. *Austenal Laboratories, Inc.*, Civ. 50–496, S.D.N.Y., 1949	44
United States v. *Bausch & Lomb Optical Co.*, Civ. 10–394, S.D.N.Y.	43
United States v. *Besser Manufacturing Company*, 96 F. Supp. 304, affirmed, 343 U.S. 444	50
United States v. *Catalin Corp. of America*, Civ. 7743, D.N.J.	43
United States v. *Columbia Steel Co.*, 334 U.S. 495	2
United States v. *Driver-Harris Co.*, Civ. 942–56, D.N.J., 1956	44
United States v. *du Pont & Co.*, 353 U.S. 586	2
United States v. *General Cable Corp.*, Civ. 40–76, S.D.N.Y.	44
United States v. *General Electric Co.*, 80 F. Supp. 989	42, 44
United States v. *General Electric Co.*, 82 F. Supp. 753	42, 44
United States v. *General Electric Co.*, 272 U.S. 476	2, 9, 11, 12, 13, 14, 16, 17, 18, 23, 28, 29, 38, 39, 40, 42, 43, 44, 45, 47, 48, 49, 50, 51

Cases—Continued

	Page
United States v. *General Instrument Corp.*, Cr. 3960, D.N.J.	44
United States v. *Krasnov*, 143 F. Supp. 184, affirmed, 355 U.S. 5	36, 45, 50
United States v. *Line Material Co.*, 333 U.S. 287	10, 11, 14, 24, 27, 35, 38, 39, 40, 43, 51
United States v. *Masonite Corp.*, 316 U.S. 265	19, 24, 29, 39, 41
United States v. *McKesson & Robbins*, 351 U.S. 305	19
United States v. *Michigan Tool Co.*, Crim. 33671 and Civ. 12605, E.D. Mich., 1953	44
United States v. *Minnesota Mining & Mfg. Co.*, Civ. 8–119, D. Mass., 1949	44
United States v. *Minnesota Mining & Mfg. Co.*, Crim. 61–73–D, E.D. Ill., 1961	45
United States v. *New Wrinkle, Inc.*, 342 U.S. 371	39, 41, 43
United States v. *Phillips Screw Co.*, Civ. 47–C–147, N.D. Ill.	44
United States v. *Robertshaw-Fulton Controls Co.*, Civ. 14745, W.D. Pa., 1956	45
United States v. *Scott & Williams, Inc.*, Civ. 54–358, S.D.N.Y., 1949	44
United States v. *Socony-Vacuum Oil Co.*, 310 U.S. 150	19
United States v. *Terminal Railroad Assn.*, 224 U.S. 383	51
United States v. *United States Gypsum Co.*, 333 U.S. 364	39, 41, 43
United States v. *United States Gypsum Co.*, 340 U.S. 76	41
United States v. *Univis Lens Co., Inc.*, 316 U.S. 241	24, 39, 43

Cases—Continued

	Page
Westinghouse Electric v. *Bulldog Electric Products Co.*, 179 F. 2d 143	41
Wilson v. *Sanford*, 10 How. 99	20

Constitution, statutes and rules:

U.S. Constitution, Art. I, Sec. 8	19
Patent Act, 35 U.S.C. 1, *et seq.*:	
35 U.S.C. 154	19
35 U.S.C. 261	20
35 U.S.C. 281	20
Sherman Act, Section 1, 26 Stat. 209, as amended, 15 U.S.C. 1	2, 3
Section 2	3
Rule 41(b), Federal Rules of Civil Procedure	4

Miscellaneous:

Baker, *Patent Rights and the Antitrust Laws*, 34 J.P.O.S. 687 (1952)	40
Celler, *Patents and Monopoly*, 38 J.P.O.S. 425 (1956)	40
Clapp, *Some Recent Developments in Patent-Antitrust Law*, 36 Marquette L. Rev. 143 (1952), 34 J.P.O.S. 945	40
Diggins, *The Patent-Antitrust Problem*, 53 Mich. L. Rev. 1093 (1955)	40
Farley, *Price Fixing and Royalty Provisions in Patent Licenses*, 34 J.P.O.S. 46 (1952)	40
Furth, *Price-Restrictive Patent Licenses Under the Sherman Act*, 71 Harv. L. Rev. 815	16
Gibbons, *Price Fixing in Patent Licenses and the Antitrust Laws*, 51 Va. L. Rev. 273	22
Hollabaugh, *Patents and Antitrust Laws*, 25 Univ. Cinc. L. Rev. 43 (1956)	39
Kligler, *Recent Judicial Limitation of the Patent License Contract*, 30 J.P.O.S. 685 (1948)	40
Mulford, *Special Problems in Licensing Patents in the United States*, 39 J.P.O.S. 395 (1957)	40

Miscellaneous—Continued

	Page
Report of the Attorney General's National Committee to Study the Antitrust Laws (1955)	23, 26
Swain, *Patents and Antitrust—Some Recent Developments*, 43 J.P.O.S. 251 (1961)	40
Williams, *Conflicting Landmark Decisions on Restrictive Patent Licenses; Package Patent Licensing and Acquisitions*, 46 Chi. Bar Rec. 312	39
Wood, *Patent Combinations and the Anti-Trust Laws*, 17 George Washington Law Rev. 59 (1948)	40
Wood and Johnson, *Patents and the Antitrust Laws*, Univ. Ill. L. Forum 544 (1950)	40

In the Supreme Court of the United States

OCTOBER TERM, 1965

No. 8

UNITED STATES OF AMERICA, APPELLANT

v.

HUCK MANUFACTURING COMPANY AND TOWNSEND COMPANY

ON APPEAL FROM THE UNITED STATES DISTRICT COURT FOR THE EASTERN DISTRICT OF MICHIGAN, SOUTHERN DIVISION

BRIEF FOR THE UNITED STATES

OPINION BELOW

The opinion of the district court (R. 700) is reported at 227 F. Supp. 791.

JURISDICTION

The judgment of the district court was entered on July 17, 1964, *nunc pro tunc* as of February 28, 1964. Notices of appeal were filed by the United States on April 27, 1964, and on August 13, 1964.[1] This Court

[1] Appellant erroneously believed that the district court had entered judgment on February 28, 1964, and filed its notice of appeal therefrom. After appellant learned, and pointed out to the court below, that in fact no such judgment had been en-

785-220 65 2

noted probable jurisdiction on January 18, 1965 (R. 782; 379 U.S. 956). The jurisdiction of this Court is conferred by Section 2 of the Expediting Act of February 11, 1903, 32 Stat. 823, as amended, 15 U.S.C. 29. *United States* v. *du Pont & Co.*, 353 U.S. 586; *United States* v. *Columbia Steel Co.*, 334 U.S. 495.

QUESTIONS PRESENTED

1. Whether this Court should overrule the holding in *United States* v. *General Electric Company*, 272 U.S. 476, that a license to make a patented article on condition that the licensee maintain its prices at a level set by the patentee, does not violate the Sherman Act.

2. Whether, if *General Electric* is not overruled, an agreement by a patentee not to grant additional licenses as long as its licensee follows the prices which it sets, contravenes section 1 of the Sherman Act.

STATUTE INVOLVED

Section 1 of the Sherman Act, 26 Stat. 209, as amended, 50 Stat. 693, 69 Stat. 282, 15 U.S.C. 1, provides in pertinent part:

> Every contract, combination in the form of trust or otherwise, or conspiracy, in restraint of trade or commerce among the several States, or with foreign nations, is declared to be illegal * * *.

---

tered, the district court, on July 17th, entered judgment *nunc pro tunc* as of February 28th. As a protective measure, the United States filed an additional notice of appeal on August 13, 1964.

STATEMENT

1. This is a direct appeal from a final judgment of the district court dismissing the government's civil antitrust suit against Huck Manufacturing Company ("Huck") and Townsend Company ("Townsend"). The complaint alleged that the two companies had violated Sections 1 and 2 of the Sherman Act by restraining trade and conspiring to monopolize the manufacture and sale of patented lockbolts,[2] which are metal fastening devices used principally in the construction of aircraft (Finding No. 7, R. 706). The basic charge was that Huck (the patentee) and Townsend, its licensee, had agreed that Townsend would sell the patented products at the prices and on the terms and conditions fixed by Huck, and that Huck would issue no additional licenses under its patents. An earlier criminal proceeding[3] involving the same charge, had been dismissed by another district judge at the conclusion of the government's case on the ground that the facts established did not constitute violations of Section 1 of the Sherman Act without evidence that the advantage acquired by the defendants as a result of their agreements was more than a normal and reasonable reward to a patentee. The court did find, however, that the government had established, at least prima facie, that the parties had

[2] Huck is the owner of United States Patents Nos. 2,531,048 and 2,531,049, dated November 21, 1950, covering lockbolts (Finding No. 10, R. 707). The validity of these patents is not contested here.

[3] 214 F. Supp. 776.

made an oral agreement under which Townsend would observe Huck's published prices and Huck would withhold further licenses. By stipulation of the parties the record in the criminal case was introduced into evidence as the government's case-in-chief in this civil action. On that record Judge Machrowicz granted defendants' motions to dismiss under Rule 41(b), Federal Rules of Civil Procedure (R. 722).

Although the defense has not yet put in its case, Huck and Townsend vigorously deny the existence of the oral agreement to fix prices and maintain the exclusivity of Townsend's license.[4] The district court concluded that "upon the evidence submitted * * * the case at bar is in all material respects the same as and ruled by the decision in *U.S.* v. *General Electric Co.* * * * " (Conclusion VII, R. 721). It further ruled that "there is no violation of the Sherman Act by Huck's establishment of the prices, terms and conditions of sale for the patented lockbolts and the following thereof by the licensee Townsend, for it is established law under the *General Electric* case, that

[4] While the district court refers, in Finding No. 16 (R. 711), only to the "verbal agreement * * * which the Government contends was entered into," the last sentence of that same Finding appears to assume the existence of such oral concurrence:

"The verbal agreement was no more than the exercise by Huck of its right as the patent owner of the lockbolt patents to grant or extend an exclusive license to another (in this case, Townsend) for the unexpired term of those patents and to require as a condition thereof that its licensee sell the patented lockbolts, which it could legally manufacture only under license, upon the terms and conditions of sale and price established by Huck and the exercise by Townsend of its right to agree to and accept such a patent license."

it is not a violation of the Sherman Act for a licensee to follow the prices, terms and conditions of sale of the patent owner, by agreement to do so" (Conclusion III, R. 719).

2. The government's evidence established the following facts:

Huck manufactures lockbolts and sells them throughout the United States, primarily for use in aircraft construction (Findings Nos. 3, 7, R. 706). Its domestic sales of that product in 1960 amounted to approximately $3½ million (GX–80, R. 614). Townsend, which was a Pennsylvania corporation when this suit was filed, is now a division of Textron Industries, Inc., and manufactures lockbolts at plants in California and Pennsylvania (Findings Nos. 2, 4, R. 705, 706). Its lockbolt sales in 1960 were approximately $2,399,873 (GX–103, R. 643).

In the latter part of 1950, Townsend, without obtaining a license from Huck, began to manufacture and sell lockbolts in competition with Huck. Soon afterward, Townsend decided that it should not risk a suit for patent infringement brought by Huck, which might invalidate the patents and open the field to other fastener manufacturers (GX–95, R. 632); accordingly, it requested a lockbolt license from Huck. Huck refused the request, and brought an action for infringement against Townsend. The district court found the patents to be valid and infringed by Townsend, and the latter filed a notice of appeal on May 27, 1953 (Finding No. 12, R. 707; GX–25, R. 501).

Despite its legal victory, Huck remained apprehensive about the existence of Townsend as a competitor, and particularly about the possibility that Townsend might develop a fastener that would serve the same purposes as a lockbolt but not infringe Huck's patents (R. 56, 189, 190; GX–26, R. 502; GX–27, R. 503–507). Thus, when Townsend in 1953 again sought a license to manufacture and sell lockbolts, Huck gave the matter serious consideration. It made extensive analyses of the advantages and disadvantages of granting a license, noting, among other factors, that its position as the sole supplier of lockbolts placed it at a disadvantage in negotiating labor contracts; but, on the other hand, that unless there were price restrictions forbidding the licensee to sell appreciably below Huck's published prices the company could suffer badly in competition because of its high labor rates and other costs, and that Townsend appeared capable of producing and selling lockbolts at a price much lower than that of Huck (R. 55, 193; GX–27, R. 503–507). Townsend, for its part, recognized that to receive a license from Huck would be more advantageous than to have the patents invalidated on appeal because, with Townsend as the sole licensee, the two companies would be able to control the lockbolt market and discourage potential competitors (Findings Nos. 12, 13, R. 707, 708; R. 396, 397; GX–95, R. 632).

Negotiations between the two companies, looking toward the grant of a license to Townsend, began in the spring or summer of 1954 (R. 59). During that

period, at a meeting of the presidents of the two companies in the office of Huck's attorney in Detroit, there was a general discussion of the various provisions of the contemplated license. Royalties, patent validity, and licensing of improvements were all considered and tentative agreements reached as to each. In addition, the parties agreed that for a two-year period, Townsend would follow Huck's lockbolt prices and Huck would not license any other firms (R. 61–63). Toward the latter part of the meeting, the President of Townsend, Mr. Dickenson, asked the attorneys to leave the room, stating that the others wanted "to talk business" (R. 63).

The executives then continued negotiations. Mr. Dickenson stated that they all were aware that the proposed agreement did not satisfy either Townsend's desire for a license which would be exclusive for the life of the patents, or Huck's desire for a price maintenance provision covering the same period. He therefore proposed "a supplementary verbal agreement" whereby Townsend would observe Huck's published lockbolt prices during the life of the patents if Huck refrained from licensing potential competitors of Townsend (R. 66, 67). Mr. Armour, President of Huck, accepted this proposal, promising, in turn, that Huck would not issue further licenses (except for lockbolts of a type which neither company wished to produce) so long as Townsend continued to adhere to Huck's prices (Finding No. 16, R. 711; R. 67–70). Thus, in effect, the exclusive licensing

and price maintenance provisions were extended by verbal agreement for the life of the patents.[5]

On September 14, 1954, Huck and Townsend executed a written license agreement (GX–17, R. 469–474). Three days later they jointly stipulated to dismiss Townsend's appeal from the judgment in the infringement suit (Finding No. 12, R. 707–708; GX–33, R. 524, 525). Under the written terms of this contract, which was to run for the life of the patents, Townsend, at a stated royalty, granted a non-exclusive cross-license to Huck on any improvements on lockbolts developed or acquired by Townsend, as well as on lockbolt devices which were substitutes for Huck's

---

[5] Testimony as to the making of the oral agreement was given by a government witness, Robert Looker. Looker, stepson of Louis Huck, inventor of the lockbolt, had been employed by Huck from 1947 until 1956, at which time he was Vice-President in Charge of Sales, and supervisor, in conjunction with the firm's attorneys, of Huck's patent matters (R. 20, 21, 53). After leaving Huck, Looker assumed the presidency of Brown-Line Corporation, which manufactured fastening devices for aircraft interiors, and unsuccessfully sought a license from Huck for lockbolts not manufactured by Huck (R. 157; GX–60), R. 559). Brown-Line Corporation subsequently filed an action against Huck and Townsend seeking treble damages for alleged violations of the Sherman Act.

Looker testified that he was present at the meeting which culminated in the verbal agreement described above (R. 59).

The court below indicated some dissatisfaction with Looker's testimony, on the basis of his interest in the outcome of the litigation and suggested some circumstantial inconsistencies in the testimony (Finding No. 15, R. 709, 710). But the court did not find that Looker's testimony was untruthful, and in the criminal trial Judge Kaess, who actually heard and saw the witness, found that the agreement was proved *prima facie* (214 F. Supp. at 777).

lockbolts; Huck agreed to make its license to Townsend exclusive for the first two years, while Townsend agreed, during the same two-year period, not to sell below the prices on lockbolts set by Huck's published schedules (Finding No. 14, R. 708, 709; GX–17, R. 469–474).[6]

Since that time, as the court below found, Huck has granted no additional licenses for the manufacture and sale of the general line of lockbolts (Finding No. 22, R. 712).[7] And Townsend has in fact maintained its prices substantially at the levels set by Huck (Finding No. 18, R. 711).

SUMMARY OF ARGUMENT

I

This Court's decision in *United States* v. *General Electric Co.*, 272 U.S. 476, that a patentee may lawfully condition a license to make and sell a patented article upon the licensee's maintenance of prices set by the patentee, was erroneous and should be over-

[6] Subsequently, Huck and Townsend entered into further agreements to cross-license products related to lockbolts. These were the Lockbolt Stump License of 1955 (GX–19, R. 476–480); the Blind Lockbolt License of 1958 (GX–72, R. 584–587); the Lockbolt Installation Tool Cross License of 1958 (GX–70, R. 567–574); and the Lockbolt Installation Tool Cross-Sales Agreement of 1958 (GX–71, R. 579–582) (Finding No. 23, R. 713).

[7] It has, however, granted two additional licenses to Pheoll Manufacturing Co. and Standard Pressed Steel Co. Both are limited to lockbolts made of titanium, a metal which neither Huck nor Townsend utilizes (Finding No. 22, R. 712). The government's witness testified that licenses of that limited nature were not foreclosed by the oral agreement (R. 67).

785–229—65——3

ruled, as four of the eight participating Justices voted to do in *United States* v. *Line Material Co.*, 333 U.S. 287, 315. This power to fix prices was said in *General Electric* to derive from the patent law, but there is nothing therein that grants such authority. Nor are there any other reasons of law or policy which justify retention of this exception to the general principle that price-fixing arrangements between competitors are illegal *per se*.

A. Under the patent law the patentee receives only the power to exclude. Thus, when the patentee enters into licensing agreements, he is not exercising any power granted by the patent laws, but only his general authority to enter into contracts disposing of his property. *Motion Picture Patents Co.* v. *Universal Film Mfg. Co.*, 243 U.S. 502. While the patent statute grants the power to prevent others from using a patented invention, it does not authorize a patentee to subject to his control the businessses of those whom he chooses not to exclude.

The power to charge a royalty permits the patentee to collect a bargained-for sum from users of the invention, which is a fair measure of its value. The power to control competitive activities of licensees, however, provides a means for imposing a burden upon the public out of proportion to the value of the invention. It deprives the public of cost savings or other competitive advantages which licensees might effect and which have no relation to the value of the invention.

The policy of the patent laws to promote invention

and discovery similarly provides no basis for extending the price-fixing privilege to patentees. The existence and extent of any relationship between the power to fix prices and the quantity or quality of research and development activities is remote and speculative. Moreover, any inducement to licensing that the price-fixing privilege may furnish does not convert it to a pro-competitive device. The opportunity to fix prices releases forces whose influences cannot be reliably gauged, and the fixing of prices has a pervasive and dangerous effect upon the economy. The reasons that led the Court to condemn price-fixing as unlawful *per se* also compel rejection of the claim that any spur to licensing provided by *General Electric* aids the competitive system more than the price-fixing hurts it. Moreover, there is no way to weigh (1) the gain in non-price competition which occurs whenever licenses are granted only because the price-fixing is permissible, against (2) the loss in competition which occurs whenever price-fixing is added to a license that would have been granted in any event.

A patentee's decision whether to license may turn upon many factors unrelated to his power to fix prices. Even a decision not to license does not necessarily injure competition in the long run. Furthermore, any appraisal of the effect of the *General Electric* rule upon competition must recognize that price-fixing licenses provide a convenient opportunity for abandoning competition. Thus, it is not only impossible to predict that competition will be benefitted by the addition of new productive sources, as the

General Electric rule presupposes, but one can never be sure that the license itself is not sought for the purpose of stabilizing prices rather than because it is needed to produce the patented product.

B. Considerations of *stare decisis* afford no basis for reaffirming *General Electric*. This Court's four-to-four decision in *Line Material* served notice on the business community seventeen years ago that *General Electric* was a doubtful precedent, and even before then its validity was uncertain. The rule has been so narrowed and its current scope is so doubtful that it no longer serves as a useful guide to the business community. As long as it remains on the books, however, *General Electric* inevitably will be both a source of confusion and a temptation to those who would utilize the doctrine as a colorable basis for anticompetitive practices.

C. This Court should not decline to overrule *General Electric* because of the district court's finding that the government stated that it was not seeking such overruling. The government raised in the district court all the issues that that court could decide; and since the court dismissed the complaint at the close of the government's case, appellees cannot claim that they were prejudiced because they refrained from introducing any evidence on those issues in reliance on a belief that the government would not challenge *General Electric*. Nor can they show that they were prejudiced because they would have followed different trial tactics and strategy if they had thought that the government would make such challenge.

II

Even if *General Electric* is not overruled, the agreement that Townsend would follow Huck's prices as long as it remained the sole licensee, and that Huck would not license others as long as Townsend followed its prices, constituted an unreasonable restraint of trade in violation of the Sherman Act. The agreement cannot be justified as "normally and reasonably adapted to secure pecuniary reward for the patentee's monopoly"—the touchstone of legality under *General Electric* (272 U.S. at 490)—since Townsend undertook to follow Huck's prices not in return for the right to use Huck's patents (which it would continue to have whether or not it followed such prices), but to assure that Huck would not license anyone else.

ARGUMENT

I.

THIS COURT'S DECISION IN *UNITED STATES* V. *GENERAL ELECTRIC COMPANY* THAT A PATENTEE MAY FIX THE SALES PRICES OF ITS LICENSEES IS ERRONEOUS AND SHOULD BE OVERRULED

Introduction

1. In *United States* v. *General Electric Company,* 272 U.S. 476, this Court in 1926 upheld the validity of an arrangement by which the patentee granted a license to make and sell the patented article on condition that the licensee maintain its prices at a level set by the patentee. The Court ruled that such price-fixing was within the permissible scope of the patent

monopoly because it was "normally and reasonably adapted to secure pecuniary reward for the patentee's monopoly" (p. 490) and therefore did not violate the Sherman Act. In the 1947 Term, the government urged that *General Electric* should be overruled, but an equally divided court declined to do so. *United States* v. *Line Material Co.*, 333 U.S. 287. In the intervening years the scope—and indeed the current validity—of the *General Electric* rule has continued to be a subject of controversy. The present status of the rule is so uncertain that it provides neither an adequate guide to businessmen for planning patent arrangements nor sufficient certainty for effective antitrust enforcement. The government continues to believe that *General Electric* was wrongly decided, and that the *General Electric* rule has resulted in substantial injury to competition. In these circumstances, the government again urges the Court to reexamine *General Electric* and to overrule it.

2. At the outset, it is appropriate to summarize the legal background against which the *General Electric* case arose. It was not the first case in which the Court upheld the right of a patentee to control his licensee's price. The issue was first considered in *Bement* v. *National Harrow Co.*, 186 U.S. 70, decided in 1902. There the Court held valid an agreement between a patent holding company and a contributor to the pool, licensing the latter to make and sell patented harrows at not less than specified prices. The decision was based on the broad ground that "[t]he very object of these [patent] laws is monopoly, and the rule is, with few exceptions, that any conditions which are not in

their very nature illegal with regard to this kind of property, imposed by the patentee and agreed to by the licensee for the right to manufacture or use or sell the article, will be upheld by the courts. The fact that the conditions in the contracts keep up the monopoly or fix prices does not render them illegal" (186 U.S. at 93).

On the basis of similar reasoning, the Court later held that the patentee properly could require a licensee to use the patented product only in conjunction with certain unpatented materials which the patentee also supplied. *Henry* v. *A. B. Dick Co.*, 224 U.S. 1. That decision, too, was predicated on the theory that the patentee's statutory right to withhold his invention from the public altogether necessarily embraced the lesser right to allow its use on conditions of his own choosing (224 U.S. at 35). This reasoning, however, was short-lived. In *Motion Picture Patents Co.* v. *Universal Film Mfg. Co.*, 243 U.S. 502, the Court overruled the *A. B. Dick* decision, holding that tying clauses in patent license agreements were illegal.[8] It declared (p. 514) that the theory that re-

[8] See also *Mercoid Corp.* v. *Mid-Continent Investment Co.*, 320 U.S. 661 (overruling *Leeds & Catlin Co.* v. *Victor Talking Machine Co.*, 213 U.S. 325); *Carbice Corp. of America* v. *American Patents Development Corp.*, 283 U.S. 27. Today such restrictions, whether express or implied, and whether the tied article is patented or unpatented, violate both the patent and the antitrust laws. See *Leith Mfg. Co.* v. *Barber Co.*, 302 U.S. 458; *Ethyl Gasoline Corp.* v. *United States*, 309 U.S. 436; *International Business Machines Corp.* v. *United States*, 298 U.S. 131; *Morton Salt Co.* v. *G. S. Suppiger Co.*, 314 U.S. 488; *B. B. Chemical Co.* v. *Ellis*, 314 U.S. 495; *International Salt Co.* v. *United States*, 332 U.S. 392.

strictive contract conditions were lesser-included restraints which the statutory patent monopoly permits, failed to "distinguish between the rights which are given to the inventor by the patent law * * * and rights which he may create for himself by private contract which, however, are subject to the rules of general as distinguished from those of the patent law." While the Court in *Motion Picture Patents* did not explicitly overrule the *Bement* decision, it "certainly shook the foundations on which the legality of price-restrictive licensing seemed to rest." See Furth, *Price-Restrictive Patent Licenses under the Sherman Act,* 71 Harv. L. Rev. 815, 819 (1958).

In another line of cases, the Court held that a patentee could not lawfully sell the patented articles to a licensee upon condition that the latter maintain resale prices prescribed by the licensor. *Bauer* v. *O'Donnell,* 229 U.S. 1; *Straus* v. *Victor Talking Machine Co.,* 243 U.S. 490; *Boston Store* v. *American Graphophone Co.,* 246 U.S. 8. The Court also struck down a patent licensing plan under which manufacturers and jobbers combined to fix prices and regulate competition. *Standard Sanitary Mfg. Co.* v. *United States,* 226 U.S. 20.

Thus, when the *General Electric* case came before the Court in 1926, the trend of decisions gave reason to believe that price-restrictive licensing would be held illegal, and the government argued that the *Bement* decision, already devitalized, should be finally interred (see 272 U.S. at 491).

Instead, the Court breathed new life into the *Bement* decision. The *General Electric* case, insofar

as is here pertinent, arose out of a government suit alleging that General Electric and Westinghouse—which together accounted for 85 percent of the nation's output of incandescent electric lamps—had entered into an agreement through which Westinghouse was licensed to make such lamps under General Electric's patents on condition that it sell them at prices fixed by the licensor. The Court held that this price-fixing provision was a valid exercise of the licensor's rights under the patent. The Court quoted with apparent approval the basic rationale of *Bement* set forth above (pp. 14–15), but supported its decision with somewhat different reasoning. Although *Bement* had stated that the patentee may license the sale of the patented product on whatever conditions he chooses "with few exceptions", the Court in *General Electric* stated that those conditions must be "normally and reasonably adapted to secure pecuniary reward for the patentee's monopoly" (at 490) and that their performance must be "reasonably within the reward which the patentee by the grant of the patent is entitled to secure" (at 489). The Court reasoned (at 490) that—

> One of the valuable elements of the exclusive right of a patentee is to acquire profit by the price at which the article is sold. The higher the price, the greater the profit, unless it is prohibitory. When the patentee licenses another to make and vend, and retains the right to continue to make and vend on his own account, the price at which his licensee will sell will necessarily affect the price at which he can sell his own patented goods. It would seem

> entirely reasonable that he should say to the licensee, "Yes, you may make and sell articles under my patent, but not so as to destroy the profit that I wish to attain by making them and selling them myself."

The Court distinguished *Motion Picture Patents* on the ground that a tying clause imposes a restraint upon products not covered by the patent grant, whereas the price at which a patented article sells is "certainly a circumstance having a more direct relation * * * to the rights of the patentee, than the unpatented material with which the patented article may be used" (p. 493). It distinguished the resale-price-maintenance cases on the ground that the first sale of the patented article (to the licensee) exhausts the patentee's monopoly and terminates his control over the article (at 493–494).

We submit that price restrictions in patent licenses cannot be justified either on the sweeping grounds of the *Bement* decision or on the more limited view adopted in *General Electric,* and that both approaches attribute to the patent monopoly a breadth which it simply does not have.

A. THE *GENERAL ELECTRIC* HOLDING THAT PRICE-RESTRICTIVE LICENSING IS AUTHORIZED BY THE PATENT LAW WAS ERRONEOUS

There can be no doubt that, unless it is authorized by the patent law, a price maintenance agreement such as the one involved here (and in *General Electric*), is a *per se* violation of the Sherman Act. The appellees are competitors, and horizontal price-fixing arrangements "are all banned because of their actual or potential threat to the central nervous system of the

economy." *United States* v. *Socony-Vacuum Oil Co.*, 310 U.S. 150, 224, n. 59 at 226. They are the archetype of those "agreements or practices which because of their pernicious effect on competition and lack of any redeeming virtue are conclusively presumed to be unreasonable and therefore illegal without elaborate inquiry as to the precise harm they have caused or the business excuse for their use." *Northern Pacific R. Co.* v. *United States*, 356 U.S. 1, 5. See, also, *United States* v. *McKesson & Robbins*, 351 U.S. 305, 309–310; *United States* v. *Trenton Potteries Co.*, 273 U.S. 392, 397. Nor is the combination any less illegal because the patentee has the assumed right to prescribe the price without consultation with his licensee. "The fixing of prices by one member of a group, pursuant to express delegation, acquiescence, or understanding, is just as illegal as fixing of prices by direct, joint action." *United States* v. *Masonite Corp.*, 316 U.S. 265, 276. The sole question, therefore, is whether a price-fixing combination otherwise banned by the Sherman Act is exempted from that prohibition by the patent statutes. We submit that those statutes have no such effect.

1. The right to fix a licensee's price is not a lesser included right logically implicit in the patent grant

Pursuant to the constitutional authority to give inventors "for limited Times * * * the exclusive Right to their * * * Discoveries" (Art. I, Sec. 8), the patent laws give the holder of a patent only "the right to exclude others from making, using, or selling the invention throughout the United States" (35 U.S.C.

154). See *Bloomer* v. *McQuewan*, 14 How. 539, 548. The Patent Act makes that right assignable (35 U.S.C. 261) and provides for its enforcement through patent infringement actions in the federal courts (35 U.S.C. 281). This narrow and limited monopoly is all that Congress has given. The patentee may, of course, enter into licensing contracts under which he agrees, in return for a royalty, to waive his statutory right of exclusion and to permit the licensee to utilize the patented invention free from the threat of an infringement suit. The right to make such agreements, however, stems not from the Patent Act itself but from the general law of contracts; as is true of most contracts, the rights of the parties are dependent upon State law and enforceable (in the absence of diversity) only in the State courts. See *e.g.*, *Luckett* v. *Delpark*, 270 U.S. 496; *Wilson* v. *Sandford*, 10 How. 99.

There is nothing in the Patent Act which purports to validate agreements which would otherwise be unlawful. And, specifically, nothing in the Act authorizes the patentee to demand, as a *quid pro quo* for waiving his right of exclusion, a price-fixing agreement plainly outlawed by the Sherman Act. In sum, when the patentee prescribes the terms and conditions on which he will refrain from enforcing his statutory monopoly, he acts solely by virtue of his right as the onwer of property to make contracts concerning that property; such a contract, like any other, is subject to the limitations imposed by the general law and is not exempted from those limitations by the

patent statute. Cf. *Mercoid Corp.* v. *Mid-Continent Investment Co.*, 320 U.S. 661, 666.

The classic rationale for price-restrictive licensing is that the right to exclude others from using the patented invention logically and necessarily includes the lesser right to permit such use upon whatever conditions the patentee may prescribe. See *Bement* v. *National Harrow Co.*, 186 U.S. 70. As we have noted, this Court once relied upon a similar rationale to justify the inclusion of tying clauses in patent license agreements. See *Henry* v. *A. B. Dick Co.*, 224 U.S. 1, 35. That holding, however, and the reasoning on which it was based, was repudiated in *Motion Picture Patents Co.* v. *Universal Film Mfg. Co.*, 243 U.S. 502. There the Court specifically rejected the argument that the right to deny entirely implies the right to allow conditionally. "The defect in this thinking," it declared, "springs from the substituting of inference and argument for the language of the statute and from failure to distinguish between the rights which are given to the inventor by the patent law and which he may assert against all the world through an infringement proceeding and rights which he may create for himself by private contract which, however, are subject to the rules of general as distinguished from those of the patent law" (243 U.S. at 514). The same fallacy underlies the rule permitting price restrictions in patent licenses.

It is no answer to say that price restrictions, unlike tying clauses, do not extend the patentee's monopoly to products not embraced within the terms of the

patent grant. The fact remains that the right to regulate by contract the business of a competitor is not an integral or necessary part of the power to exclude. Moreover, any claim of a right to control the patentee's business decisions in marketing a patented item misconceives the scope of the patent claim. It ignores the distinction between (a) the patented invention or discovery, *i.e.*, the novel idea or concept which the patentee has contributed to the art, and (b) the concrete physical objects made and sold by his competitor pursuant to license. The patentee has a property right in the inventive idea or concept, but he has no such interest in the articles manufactured by the licensee. Even under existing law, the lower courts have held that a patentee may not fix the price of the licensee's unpatented end product when the patent covers only a component, constituent material, or a machine or process used in the manufacture of the product. See, *infra,* pp. 41–42; Gibbons, *Price Fixing in Patent Licenses and the Antitrust Laws,* 51 Va. L. Rev. 273, 290–292. This rule apparently applies without regard to the importance of the invention in producing the end product, for the reason that the patentee is not entitled to fix the price of anything other than his own invention.

For precisely the same reason, we submit, the owner of a patented invention should not be permitted to control the price at which another businessman sells articles which he manufactures and owns. For while such an article admittedly embodies the patentee's inventive contribution, it embodies much else besides.

It incorporates also the many factors of production and distribution contributed or assembled by the licensee himself—factors such as capital investment, productive technology, managerial skill, labor, materials, and sales organization. The market price of the article reflects not only the value of the patentee's idea, but also the economies which the licensee may have achieved through efficient organization, superior manufacturing techniques, enlightened labor relations, prudent and selective acquisition of raw materials, and improved distribution methods. The fact that the patentee is entitled to protection and compensation for his idea does not justify depriving the public of these cost savings or denying to it the benefits of competition in these other aspects of production and distribution. See *Report of the Attorney General's National Committee to Study the Antitrust Laws*, 235, 236 (1955) (dissenting remarks of Louis B. Schwartz).

There is therefore no sound basis in theory for regarding the price-fixing privilege as a "lesser included" right logically implicit in the statutory right to exclude.

2. The right to fix a licensee's price cannot be justified as a "reasonable" corollary of the patentee's power to exclude

a. The *General Electric* decision, as we have seen, rested on the view that "the patentee may grant a license * * * upon any condition the performance of which is reasonably within the reward which the patentee by the grant of the patent is entitled to secure" (272 U.S. at 489). A price-maintenance provision

was deemed justified because of the danger that the patentee might otherwise be undersold by a licensee and forced to reduce his own price, and thus could no longer receive a monopoly price for his own production. This approach plainly makes "the inventor's reward the prime rather than an incidental object of the patent system" (*Line Material,* 333 U.S. at 318 (concurring opinion)). It is incompatible with the principles, announced by this Court in many other cases, that the rights granted by a patent must be confined "strictly to the terms of the statutory grant" (*United States* v. *Univis Lens Co., Inc.,* 316 U.S. 241, 251); that the patent monopoly may not be enlarged merely because "it would be more convenient to the patentee to have it so, or because he cannot avail himself of its benefits within the limits of the grant" (*B. B. Chemical Co.* v. *Ellis,* 314 U.S. 495, 498); and that "the benefit to the public or the community at large," rather than the advantage of the patentee, was "the primary object in granting and securing that monopoly" (*Kendall* v. *Winsor,* 21 How. 322, 328). "As stated by Mr. Justice Story in *Pennock* v. *Dialogue,* 2 Pet. 1, 19, the promotion of the progress of science and the useful arts is the 'main object'; reward of inventors is secondary and merely a means to that end." *United States* v. *Masonite Corp.,* 316 U.S. 265, 278.

The power to exclude, which the patent laws give, is itself a fair and appropriate reward for the patentee's invention. If he chooses to remain the sole manufacturer, he reaps that reward in the form of monopoly profits on the protected sales. Presum-

ably that reward will vary with the commercial importance of the invention, which is as it should be. If, instead, he prefers to grant licenses, thereby shifting to others part of the risks of investment in production facilities, he receives a royalty in exchange. Again the royalty is presumably commensurate with the value of his invention, for it is the product of a free bargaining process.

In the event he chooses to manufacture and sell the patented product in competition with the licensee, he may or may not be able to protect his competitive position by fixing a royalty which increases the licensee's costs of production to a level at which he cannot underprice the patentee. In accordance with the usual operation of an open market, the licensee's willingness to concede that kind of protection will depend upon an appraisal of the value of the invention. Thus, the ability to adjust the royalty is not a complete substitute for price-fixing. Whenever the commercial value of the patent is not enough to overcome the patentee's relative inefficiency even at the highest obtainable royalty, he will still be at a competitive disadvantage. But this is just another way of saying that the invention is not important enough to enable this particular patentee to compete successfully, for competitors would prefer to forego a license and to compete by other means rather than to pay a higher royalty.

We submit that nothing in the purpose or policy of the patent law justifies permitting a patentee to obtain by means of a price-fixing agreement an immunity from competition which exceeds the advantage

that licensees are willing to concede in terms of royalties. "[I]f [the patentee's] discovery is an important one his reward * * * will be large, as experience has abundantly proved, and if it be unimportant he should not be permitted by legal devices to impose an unjust charge upon the public in return for the use of it." *Motion Picture Patents Co.* v. *Universal Film Mfg. Co., supra,* at 513. And a price-fixing agreement is exactly the kind of agreement to which a licensee might readily agree even if the patent is unimportant, for it may actually lower his royalty obligation while the public pays the larger toll.

To be sure, even if the patent is very valuable, so that the patentee has the ability to command a high royalty, he does not have the same measure of security which would be afforded by a price-fixing agreement. The possibility remains that he may have miscalculated the licensee's costs; that the licensee may be willing to accept a lower profit than the patentee had bargained for; or, most important, that the licensee, though burdened with a high royalty, may in the future develop cost-saving methods which will enable him to undersell the patentee despite the handicap of a high royalty. But the patentee's power to exclude is substantially different from and does not logically include the right to freeze these competitive possibilities. One leading authority has summed up the matter in these terms (*Report of the Attorney General's National Committee to Study the Antitrust Laws,* 235, 236 (1955) (dissenting remarks of Louis B. Schwartz)):

> A patentee obtains the exact value of his lawful monopoly on the invention when he exacts all the traffic will bear in the way of royalties, or by exercising his privilege to be the sole maker or seller. When the patentee seeks, in addition, to control his licensee's prices it must be because he fears that the advantage which he has in technology is more than over-balanced by his competitor's advantages in plant efficiency, management, labor relations, and cost of materials, so that whatever he charges in the way of royalties will still leave his competitor in a position to sell for less. But there is no justification for depriving the public of the benefits of competition in all these other aspects of production and distribution merely because the patentee is entitled to a protected price for his inventive contribution. * * *

b. It is sometimes argued that the basic objective of the patent laws is to promote invention and discovery, and that the rewards of price-fixing serve as an important stimulus to that end.[9] Even if the price-fixing privilege did serve that end, it still would not overcome the fact that the Constitution and the patent statutes give the patentee the power to exclude, and not any guarantee of profit (see *supra*, pp. 19–21). Furthermore, although a court might be able to ascertain whether the authority to fix prices was a significant factor in inducing a particular patentee to undertake research, the determination whether patentees as a class would be deterred from research

[9] See Mr. Justice Burton's dissent in *Line Material*, 333 U.S. at 350–352.

if denied that power is a matter properly for legislative rather than judicial cognizance. There are compelling economic forces which, wholly apart from any hope by patentees that their profits will be increased through price-fixing provisions in patent licenses, will induce manufacturers to undertake substantial research. These include the need to keep up with or ahead of competitors, the fear of being pre-empted by a rival's patents, and the hope of earning royalties from the patents. For a court to attempt to resolve that issue—*i.e.* to determine whether the diminution in research that the *General Electric* rule may avoid outweighs the injury to competition that that rule causes—would unwisely embroil the judiciary in a highly conjectural and speculative inquiry.

3. Price restraints cannot be justified on the ground that they encourage licensing and thereby benefit competition

It is sometimes argued that the right to control a licensee's prices should not be treated as other price-fixing arrangements because such a right ultimately benefits, rather than injures, competition. The argument is that since the patent law gives the patentee a monopoly, a rule which results in the encouragement of licensing is justified because every license creates some competition which would not otherwise exist. Thus appellees argue that the "probabilities are that public interest would be advanced by inducing a patentee to create a needed second manufacturing source of the patented article" (Mot. to Affirm, p. 31). As we show below, this argument is wholly conjectural, and such speculation provides no justification for per-

mitting a patentee to engage in a practice that has as clear an anticompetitive effect as price-fixing has. As the Court said in a related context, the power of the patentee to fix the price at which its licensees sell their patented product:

> is a powerful inducement to abandon competition. The extent to which that inducement in a given case will have or has had the desired effect is difficult, if not impossible, of measurement. The forces which that influence puts to work are subtle and incalculable. * * * It is outside our competence to inquire whether the result was or was not beneficent, or whether the evil was or was not realized. As in case of an appraisal of the reasonableness of prices which are fixed, such a determination could satisfactorily be made 'only after a complete survey of our economic organization and a choice between rival philosophies' (*United States* v. *Trenton Potteries Co., supra,* 273 U.S. at p. 398) and only after weighing a host of intangibles. *United States* v. *Socony-Vacuum Oil Co., supra.* The power of this type of combination to inflict the kind of public injury which the Sherman Act condemns renders it illegal *per se.* [*United States* v. *Masonite Corp.,* 316 U.S. 265, 281.]

a. The argument that the *General Electric* rule induces some patentees to grant licenses who would not otherwise do so, and that the non-price competition thereby created is better than no competition at all, provides no valid basis for concluding that the rule results in a net gain for competition. The rule also per-

mits some patentees to fix prices who would otherwise grant licenses without such restraints. There is no possible basis for measuring the price competition that is lost in the latter cases against the non-price competition that is gained in the former, short of a census of all patent licenses containing price-fixing provisions and a method of measuring the importance of the commerce affected by the patentee's decision. For instance, the decision of the owner of a basic important patent would be far more significant than the decisions of a large number of owners of gadget patents. And it is apparent that there is nothing in the nature of the available choice that would permit a prediction as to which choice would be made by the owners of any particular type of patent.

Moreover, there is no way of demonstrating that in any large number of cases the option to price-fix is the decisive consideration in granting or denying a license. The decision whether to license necessarily turns upon many factors, both pro and con, and there are many reasons why a patentee may decide to share his invention even though he cannot control the licensee's prices.

First, the patentee's productive capacity may be too small to meet the expected needs of the market. For him to make an additional large investment may involve a risk he is unwilling to take, or he may even be unable to secure the capital. In such cases, he may conclude that the royalties from licensing would exceed the sales profits which would be lost through competition, including price competition by the licensee.

Second, the patentee's customers may demand that he license additional suppliers in order to relieve the pressure on his capacity, speed up delivery schedules, and provide more dependable service. Unless satisfied, these customers may abandon the patented product and seek out alternatives.

Third, the patentee, though willing and able to meet existing demand, may find it desirable to license other suppliers in order to promote the sale of the patented product more widely and thus stimulate new demand. Rapid cultivation of the market through licensing is particularly important in dynamic industries where technological progress threatens to make any invention obsolete within a relatively few years.

Fourth, the patentee may be motivated to license competitors because of doubt as to the validity, coverage or competitive strength of his patent. He may fear that unless he makes his invention available to competitors on a royalty basis, they will seek to invalidate the patent, show that it is not infringed, or circumvent it by developing superior or less expensive substitutes.

Many of these factors were operative in the present case and influenced Huck's decision to grant Townsend a license. In assessing the wisdom of this action, Huck's vice president noted (R. 503–505) that more than one source was required in order to develop a greater over-all market; that royalty income would be of appreciable benefit and would require no capital expenditure; that a second source might hasten the development and expansion of production of tools to apply the patented bolts, the scarcity of which was

Huck's greatest sales drawback; that Townsend already had considerable capital invested in the product and might try, through re-development, to avoid the patents; that Townsend threatened to appeal from the adverse decision in Huck's patent infringement suit and there was a possibility that the patents would be declared invalid and/or not infringed by the Townsend construction (R. 505); and that it was probable that such a license would deter Townsend from any continuing development to circumvent Huck's patent.

But even in those cases where the price-fixing option might be decisive in the patentee's determination, it cannot be assumed that the grant of the price-fixing license results in a net gain to competition. In today's complex technology, hardly a product exists which is not being made in some closely substitutable form by active competitors, and they are likely to be the most frequent applicants for licenses. To the extent that a competitor shifts from producing such a substitute product, with respect to which competition is unrestricted, to the new patented product as to which there will be no price competition, there would hardly appear to be any net gain in competition.

Indeed, a good case can be made that the grant of a price-fixing license in such circumstances is most likely to result in a net loss to competition. For even if the shift from a substitute product is viewed as pro-competitive, the over-all effect might still be anti-competitive. The license has two possibly useful effects: (1) a second source of production has been added, with non-price competition a possibility; and (2) upon the expiration of the patent monopoly

a second source of supply will be available, already equipped and experienced in production. Neither of these results is necessarily of substantial competitive significance, however.

In appraising the competitive significance of a second source of supply with price restraints, it must be borne in mind that we are assuming the case of a patentee who would deny all licenses rather than permit price competition. But such a patentee presumably would be equally unlikely to grant licenses that have price-fixing provisions if he believed that the licensees would be likely to divert any substantial amount of existing or potential business. Similarly, it is doubtful that a patentee would be likely to grant a license which would establish a competitor for the period after the patent had expired, if he thought this would create real competition. In the rare cases where a patent actually could provide complete domination of a market for 17 years, it is doubtful that the price-fixing option would induce the patentee to license.

As against the dubious benefits which a license might provide for competition, there must be weighed the fact that the mere acceptance of a license may have a deterrent effect on other potential competitors. In the present case, for example, one of the considerations which influenced Townsend's attorneys to recommend the acceptance of a license from Huck was that "it might be possible by such a license agreement to control the lockbolt business and limit it to Huck and Townsend. Such a limitation would be preferable to a legal action which would invalidate the patents and

which, by the same act, would open the field to other manufacturers of fasteners. A license agreement would certainly discourage them from going into the field" (GX–95, R. 632–633). Thus, if the patent is in fact one which could not survive attack, licensing not only fails to "open up" significant competition between the patentee and the licensee themselves, but in addition removes the likelihood of a challenge by those most likely to attack the patent, and leaves it standing as a deterrent to other potential competitors. Moreover, to the extent that the license helps to provide a second source for customers, plus additional productive facilities, the attractiveness of the market is substantially reduced for other potential competitors, who might otherwise be prepared to challenge the patent or invent around it. In such circumstances, if the license contains restrictions suppressing price competition, the resulting direct injury to competition is obviously not offset by any increase in non-price competition.

b. Where the patent is both valid and sufficiently broad to exclude all commercially acceptable substitutes, and the patentee would not otherwise have granted any licenses, the granting of a price-fixing license admittedly makes the product available from another source. But that does not mean that competition is thereby increased. For competition involves a significant time factor, and in the long run it might be better served through vigorous efforts to bypass the patent by developing new products and methods—efforts which may be deterred by the acceptance of a license

under the existing patent. Thus, in the present case, Huck's vice-president thought it "probable that such a license would deter [Townsend] from any continuing development to circumvent our patent protections" (R. 506). Here again, the long-term impact upon competition of removing incentives to circumvent the patent would seem too high a price to pay for the benefit of creating non-price competition in the sale of the patented product.

As Mr. Justice Douglas pointed out in his concurring opinion in *Line Material* (333 U.S. at 319), the offering of a price-fixing license is "a powerful inducement for the abandonment of competition, for the cessation of litigation concerning the validity of patents, for the acceptance of patents no matter how dubious, for the abandonment of research in the development of competing patents." Countermoves of the non-patentee when he is denied a license are a feature of the patent system which have a beneficial effect upon the competitive system. In deciding whether inducements shall be offered to patentees to grant licenses in the interest of encouraging competition, the loss of such counter-moves also must be weighed.

The above analysis assumes that the licensee derives no benefit from the price restrictions themselves and is motivated to accept a license by his desire either to avoid an infringement suit or to produce the patented article in preference to his own. On those assumptions, the considerations discussed above are equally applicable whether the patentee licenses a

single competitor, as in the present case, or many competitors. There is still another class of cases, however, in which restrictive licensing unquestionably injures competition—notably, those in which the licensee, though neither fearing an infringement suit nor preferring the patentee's product, accepts a license solely to secure the benefit of the price restrictions themselves. When several competitors are licensed, each benefits from the renunciation of price competition by the others, and therefore each has an incentive to accept the burdens of the license even though convinced that the patent is invalid and/or that his own product does not infringe and is at no competitive disadvantage.

The competitive situation is but slightly different when only a single license is granted. Since a price-maintenance provision restrains only the licensee, not the patentee,[10] a sole licensee does not get the benefit of anyone else's price-fixing commitment. He does, however, gain practical advantages which may be equally valuable. Realistically, there is little likelihood that the patentee will engage in price-cutting, since the whole purpose of the price-maintenance provision is to protect his monopoly price. Moreover, the patentee knows that if he reduces his price to a level unacceptable to the licensee, the latter remains

[10] A restraint on the freedom of competition by the patentee would plainly be illegal; it could not even arguably be justified in terms of the patent law. See *McCullough* v. *Kammerer Corp.*, 136 F. 2d 759 (C.A. 9), certiorari denied, 335 U.S. 813; *Pfotzer* v. *Aqua Systems, Inc.*, 162 F. 2d 779 (C.A. 2); *United States* v. *Krasnov*, 143 F. Supp. 184, 197–198 (E.D. Pa.), affirmed *per curiam*, 355 U.S. 5.

free to attack the patent or resume production of his own non-infringing product. Thus, even without an explicit commitment in the license, the patentee is not likely to make an important price change without discussing, and perhaps clearing, it with the licensee.

What the price-fixing provisions do is to provide a mechanism, or legal excuse, for continuing communication and exchange of information between the parties with regard to prices. Normally, there is also a set price list to which both parties are expected to adhere until further notice from the patentee, and which is bound to be a limiting factor on price movements. In sum, through the medium of the price-maintenance provision, and its administration, the parties are able to stabilize prices to a degree which otherwise would have been impossible.[11] This stabilization may often be worth more to the licensee than permission to make the patented product, and to secure it he may be willing to accept a license even though he has no fear of being excluded from the market. Here, as in the multi-license situation, price-fixing may be the *raison d'etre* of the agreement, and price competition may be suppressed though the patent itself has no power to restrain.

[11] Moreover, the ability to make a binding promise to follow the patentee's price, no matter how high it goes, may be of benefit to the licensee, as well as to the patentee. But for such a commitment, each party may hold his price down for fear that the other will underprice him if he raises it. The licensee's agreement frees the patentee from this uncertainty and enables him to raise his price with assurance that the licensee will follow, and this is an assurance which the licensee may obviously be happy to provide.

B. THE PUBLIC INTEREST IN OVERRULING *GENERAL ELECTRIC* OUTWEIGHS CONSIDERATIONS OF *STARE DECISIS*

We have shown that *General Electric* was erroneously decided and that the rule it established is one which frustrates antitrust policy without furthering the objectives of the patent law. There remains only the question whether the reasons for overruling the decision are outweighed by the desirability of adhering to precedent. Here, as in *Line Material*, it may be argued that businessmen have shaped their licensing arrangements in reliance on *General Electric*, and that it would be unfair to defeat their expectations. We submit, however, that in this instance considerations of *stare decisis* are of minimal weight, while the public interest in eliminating this unsound precedent is substantial.

1. *General Electric* has long since ceased to be a vital precedent. Seventeen years ago, in *Line Material*, four of the eight participating Justices took the position that *General Electric* was incorrect and should be overruled. At that time, the Court was understandably reluctant to disturb business arrangements which had been made—though even then only "hesitatingly"—in reliance upon the earlier decision (333 U.S. at 303). Today, however, there is no reason for such concern. The views expressed by the concurring Justices in *Line Material* served notice upon the business community, and upon members of the patent and antitrust bars, that *General Electric* could no longer be relied upon. All patents issued prior to *Line Material* have now expired;[12] and hence

[12] The life of a patent is seventeen years, and *Line Material* was decided on March 8, 1948.

all price-restrictive licenses currently in effect were entered into after *Line Material* and with full notice of the risks involved.

Moreover, the scope of the *General Electric* doctrine has been sharply curtailed by subsequent decisions of this Court and of the lower federal courts.[13] Legal writers have repeatedly noted that the *General Electric* decision has been "whittled away by subsequent decisions to a mere shadow of its former self."[14] These commentators have voiced doubt as to its continuing authority and counseled against relying on it. One observer, writing in 1956, declared:

> The present day scope of the GE doctrine is so narrow as to be of almost no practical use to a patent owner and the dangers are too great to risk if the owner attributes any substantial value to his patents.
>
> * * * * *
>
> Under these circumstances [*Line Material* and the subsequent trend of decisions], any reliance on the doctrine is, to say the least, a hazardous undertaking which may leave the patent owner in a precarious position from the standpoint of treble damage suits and the enforcement of his patents against infringers.[15]

---

[13] *E.g.*, *United States* v. *New Wrinkle, Inc.*, 342 U.S. 371; *United States* v. *United States Gypsum Co.*, 333 U.S. 364; *United States* v. *Univis Lens Co., Inc.*, 316 U.S. 241; *United States* v. *Masonite Corp.*, 316 U.S. 265; *Ethyl Gasoline Corp.* v. *United States*, 309 U.S. 436; *Newburgh Moire Co.* v. *Superior Moire Company*, 237 F. 2d 283 (C.A. 3).

[14] Williams, *Conflicting Landmark Decisions on Restrictive Patent Licenses; Package Patent Licensing and Acquisitions*, 46 Chi. Bar Rec. 312, 317 (1965).

[15] Hollabaugh, *Patents and Antitrust Laws*, 25 Univ. Cinc. L. Rev. 43, 64, 65 (1956).

And in 1950, only two years after *Line Material*, General Electric's general counsel warned that "the net effect is so to limit the commercial utility of price restrictions while enhancing unpalatable legal consequences that their use is seriously discouraged." Wood and Johnson, *Patents and the Antitrust Laws*, Univ. Ill. L. Forum 544, 564 (1950).[16]

In this process of limiting the *General Electric* doctrine, there has arisen considerable uncertainty as to its proper application, i.e., as to the precise circumstances in which price conditions are "normally and reasonably adapted to secure pecuniary reward for the patentee's monopoly." Two examples will serve to illustrate this generalization.

a. Decisions subsequent to *General Electric* raise serious doubts as to whether a patentee may ever grant two or more similar price-fixing licenses. This Court repeatedly has held that *General Electric* does not authorize concerted action by a patentee and his licensees to regulate the prices of an entire industry

[16] See also Wood, *Patent Combinations and the Anti-Trust Laws*, 17 George Washington Law Review 59 (1948); Diggins, *The Patent-Antitrust Problem*, 53 Mich. L. Rev. 1093 (1955); Clapp, *Some Recent Developments in Patent-Antitrust Law*, 36 Marquette L. Rev. 143 (1952); 34 J.P.O.S. 945; Farley, *Price Fixing and Royalty Provisions in Patent Licenses*, 34 J.P.O.S. 46 (1952); Baker, *Patent Rights and the Antitrust Laws*, 34 J.P.O.S. 687 (1952); Swain, *Patents and Antitrust—Some Recent Developments*, 43 J.P.O.S. 251 (1961); Kligler, *Recent Judicial Limitaton of the Patent License Contract*, 30 J.P.O.S. 685 (1948); Mulford, *Special Prablems in Licensing Patents in the United States*, 39 J.P.O.S. 395 (1957); Celler, *Patents and Monopoly*, 38 J.P.O.S. 425 (1956).

through multiple restrictive licenses,[17] and it has ruled that such illegal concerted action is established by proof that substantially identical "industry-wide [price-fixing] license agreements [were] entered into with knowledge on the part of licensor and licensees of the adherence of others * * *" (*United States* v. *United States Gypsum Co.*, 333 U.S. 364, 389; "the concert of action [was] established by the favored licensee clause of the standard license agreement" (*United States* v. *United States Gypsum Co.*, 340 U.S. 76, 83). Although this Court found it unnecessary in *Gypsum* to decide "whether a plurality of licenses, each containing a price-fixing provision, violates the Sherman Act" (340 U.S. at 85), the Third Circuit subsequently held that a patentee violated the Sherman Act by issuing price-fixing licenses to two of the other four firms in the industry. *Newburgh Moire Co.* v. *Superior Moire Company*, 237 F. 2d 283.[18]

b. The question has also arisen as to the relationship which the patent must bear to the article sold by the licensee in order to justify the patentee in regulating its price. The circuits are divided over whether a licensor may control the price of an unpatented article through a license of a patent covering the machine or process used to produce it, with a majority holding

[17] *United States* v. *New Wrinkle, Inc.*, 342 U.S. 371; *United States* v. *United States Gypsum Co.*, 340 U.S. 76, 84; *United States* v. *United States Gypsum Co.*, 333 U.S. 364; *United States* v. *Masonite Corp.*, 316 U.S. 265.

[18] The Fourth Circuit previously had indicated the contrary view. See *Westinghouse Electric* v. *Bulldog Electric Products Co.*, 179 F. 2d 139, 143 (dictum).

that he may not.[19] Similarly, the courts are divided over whether the patentee may by license regulate the price of an article only part of which—albeit a valuable and essential part—is covered by the patent; two different district courts took conflicting views with regard to the same patents and licensees. Compare *General Electric Co.* v. *Willey's Carbide Tool Company,* 33 F. Supp. 969, 977 (E.D. Mich.) with *United States* v. *General Electric Co.,* 80 F. Supp. 989, 1004–1005 (S.D.N.Y.); see, also, *United States* v. *General Electric Co.,* 82 F. Supp. 753, 813 (D. N.J.).

The effect of *General Electric* in both of these areas is unclear. Substantial litigation would be required before those issues were resolved, and certainly before the many other questions arising out of the application of *General Electric* to a wide variety of factual situations could be definitively settled.

2. The many limitations which have been engrafted upon the *General Electric* rule, however, have by no means rendered it harmless to the public interest. As we have shown, the decision is a source of confusion and uncertainty and is of little practical value as a guide for formulating business policies. At the same time it is a standing invitation to price-fixing by those willing to take a chance. Experience has shown that the privilege of fixing a licensee's price, however limited, readily leads to abuse. *General Electric* has been invoked in support of a multitude of restrictive

[19] *Cummer-Graham Co.* v. *Straight Side Basket Corp.*, 142 F. 2d 646 (C.A. 5); *Barber-Colman Co.* v. *National Tool Co.*, 136 F. 2d 339 (C.A. 6); cf. *American Equipment Co.* v. *Tuthill Bldg. Material Co.*, 69 F. 2d 406 (C.A. 7). Contra: *Straight Side Basket Corp.* v. *Webster Basket Co.*, 82 F. 2d 245 (C.A. 2).

schemes, the variety and comprehensiveness of which are recorded in the decisions of this Court. They have included efforts to control the price of optical lenses at the distribution level by parcelling out "manufacturing licenses" to wholesalers and retailers who ground the lens blanks;[20] complex licensing arrangements designed to regulate the prices and practices of thousands of wholesale jobbers of gasoline;[21] industry-wide patent licensing systems aimed at regulating prices for wallboard and for a specialty paint;[22] and cross-licensing agreements giving one patentee a right to fix prices under another's patent on heavy duty fuses.[23] While in each case the Court eventually condemned the arrangement as going beyond the limited privilege conferred by *General Electric*, the public has doubtless paid a heavy toll in the meantime.

The restrictive licensing schemes which have reached this Court represent only a small portion of those whose validity has been litigated in the lower federal courts since the *General Electric* decision. Nine such cases were pending at the time of the *Line Material* decision and are described in the Court's opinion (333 U.S. at 301–302), but none came before this Court for resolution.[24] Other cases filed by the

---

[20] *United States* v. *Univis Lens Co., Inc.*, 316 U.S. 241.

[21] *Ethyl Gasoline Corp.* v. *United States*, 309 U.S. 436.

[22] *United States* v. *United States Gypsum Co.*, 333 U.S. 364; *United States* v. *New Wrinkle, Inc.*, 340 U.S. 371.

[23] *United States* v. *Line Material Co.*, 333 U.S. 287.

[24] One was later dismissed on plaintiff's motion because of the cessation of the alleged violation (*United States* v. *Catalin Corp. of America, Civ.* 7743, D.N.J.); one resulted in a summary judgment against one conspirator (*United States* v. *Bausch &*

United States in the intervening years were similarly disposed of without appeal to this Court.[25] As long as the *General Electric* rule retains any vitality, patentees will continue to devise and utilize price-fixing schemes

---

Lomb Optical Co., Civ. 10–394, S.D.N.Y.; the remaining defendants were later dismissed); four ended with consent judgments against most or all of the defendants (*United States* v. *General Cable Corp.*, Civ. 40–76, S.D.N.Y.; *United States* v. *Phillips Screw Co.*, Civ. 47–C–147, N.D. Ill.; *United States* v. *American Optical Co.*, Civ. 10–391, S.D.N.Y.; *United States* v. *Allegheny Ludlum Steel Corp.*, Civ. 45–83, D.N.J.); one ended with pleas of *nolo contendere* and $48,000 in fines (*United States* v. *General Instrument Corp.*, Cr. 3960, D.N.J.); the companion civil case resulted in a litigated decree for the government, reported in 87 F. Supp. 157 (D.N.J.); one in a finding of guilty and fines of $56,000 (*United States* v. *General Electric Co.*, Cr. 110–412, 80 F. Supp. 989 (S.D.N.Y., 1948); and one, *United States* v. *General Electric Co.*, Civil 1364, 82 F. Supp. 753 (D.N.J. 1949), resulted in a litigated decree enjoining the General Electric Company from conspiring with Westinghouse and others to restrain trade and monopolize the incandescent electric lamp industry.

[25] These cases included *United States* v. *Minnesota Mining & Mfg. Co.* (Civ. 8–119, D. Mass., 1949), involving patent license agreements among the manufacturers of sandpaper and other coated abrasives, settled by consent decree in 1950; *United States* v. *Driver-Harris Co.* (Civ. 942–56, D.N.J., 1956), involving patent license agreements among manufacturers of electrical alloy resistance wire, settled by consent decree in 1964; *United States* v. *Austenal Laboratories, Inc.* (Civ. 50–496, S.D.N.Y., 1949), involving patent license agreements among manufacturers of patented dentures, settled by consent decree in 1951; *United States* v. *Michigan Tool Co.* (Crim. 33671 and Civ. 12605, E.D. Mich., 1953), involving patent license agreements among manufacturers of machines for cutting, shaping and finishing gears, concluded by *nolo contendere* pleas and a consent decree in 1956; *United States* v. *Scott & Williams, Inc.* (Civ. 54–358, S.D.N.Y., 1949), involving patent license agreements among manufacturers of seamless hosiery machinery, set-

in patent licenses that appear to hold out any promise of being upheld. Perhaps all or most of such schemes ultimately will be invalidated. But in the interval the public will be denied the benefits of substantial price competition whose elimination is improper, and businessmen will have to undergo substantial and expensive litigation to protect their right to be free from such restrictions.

In conclusion, the *General Electric* decision is erroneous in principle, obscure and uncertain in its application, damaging in its effect upon competition, and readily susceptible of abuse. The considerations which normally make the Court reluctant to disturb established legal rules are here almost totally absent. We urge, therefore, that the Court reconsider this decision and overrule it.

---

tled by consent decree in 1954; and *United States* v. *Robertshaw-Fulton Controls Co.* (Civ. 14745, W.D. Pa., 1956), involving a patent license agreement between two manufacturers of temperature controls for gas ranges, settled by consent decree in 1957. *United States* v. *Krasnov*, 143 F. Supp. 184 (E.D. Pa., 1956), held unlawful an arrangement by which two manufacturers of slip covers cross-licensed patents and agreed to collaborate in the selection of future licensees, the bringing of infringement suits and the setting of prices. The district court there held that the agreement was beyond the scope of the *General Electric* rule, since it "operated clearly for the benefit of the patentee and licensee", and this Court affirmed *per curiam*, 355 U.S. 5. A criminal action against the same defendants was terminated upon pleas of *nolo contendere* (Crim. 15754, E.D. Pa.). In still another action now pending a multi-count indictment charges price fixing in patent licenses relating to pressure sensitive tape, magnetic recording tape, magnetic recording media and certain lithographic plates. (*United States* v. *Minnesota Mining & Mfg. Co.*, Crim. 61-73-D, E.D. Ill., 1961.)

C. THIS COURT SHOULD NOT DECLINE TO OVERRULE *GENERAL ELECTRIC* BECAUSE OF THE DISTRICT COURT'S FINDING THAT THE GOVERNMENT STATED THAT IT WAS NOT SEEKING SUCH OVERRULING

Subsequent to entry of the judgment below and filing of the notice of appeal, the district court granted the defendants' motion to supplement the record by adding two pre-trial orders. These orders had been drafted by that court in 1962, submitted to counsel for suggestions, and signed by Judge Machrowicz, but (contrary to the belief of all counsel) had not been entered on the record. The government did not object to this much of the motion. In addition, at the request of defendants and over the government's objection, the district court added the following statement to one of the pretrial orders (see R. 773–778):

> On October 15, reporting on the applicability of the General Electric case, the Government stated that it is not attempting to have the doctrine set in the General Electric case overruled and stated only that facts in this case do not fall within that doctrine; that the doctrine is still good law but does not apply as the actions in this case are illegal without application of the doctrine; and that it will write a letter by December 29, describing in what way the facts of this case differ from the facts of the General Electric case. A copy of the letter to the Court, dated October 30, 1962, from the Assistant Attorney General of the United States, Antitrust Division of the Department of Justice, is attached hereto and made a part hereof [R. 778].[26]

[26] The letter to which the court referred set forth the government's reasons for concluding that this case did not come within the *General Electric* doctrine (R. 779–781).

The court stated (R. 778) that this recital "correctly relates events which occurred on October 15, 1962."

Appellees presumably will argue, as they did in their motion to affirm (pp. 10–18), that this finding forecloses the government from now urging that *General Electric* should be overruled. Although we strongly opposed such amendment of the pre-trial order (See R. 740–749, 754–759), we do not seek to overturn the finding it contains as clearly erroneous. We do submit, however, that the government is not barred because of this finding from urging that *General Electric* should be overruled; in any event, as appellees themselves recognize (Motion to Affirm 12), such a statement by the government would not create any jurisdictional bar to the Court considering the issue.

Appellees were not prejudiced in any way by their belief that the government would not challenge *General Electric*. The only factual issue before the district court was whether, as the government contended and its witness testified, Huck and Townsend had supplemented their written agreement, under which Townsend received an exclusive license for two years and undertook to observe Huck's prices during that period, with an oral understanding that prices would continue to be fixed so long as the license remained exclusive. The only legal issue before the district court—and, indeed, the only such issue that that court could decide as the case came before it—was whether, if there had been such an oral agreement, it was covered by the *General Electric* rule. Since the dis-

trict court dismissed the complaint at the close of the government's case, appellees cannot claim that they refrained from introducing any evidence relating to these two issues that they might otherwise have presented had they believed that the government would challenge *General Electric.*

Nor can appellees demonstrate that they were prejudiced because they would have followed different trial tactics and strategy if they had thought that the government would challenge *General Electric.* For whether this Court should overrule one of its own decisions depends upon broad considerations of public policy, and obviously does not turn upon the facts of the particular case in which it is urged to do so. Appellees can make in this Court all legal arguments as to why *General Electric* should not be overruled. To the extent that arguments on this broad legal issue may rest on material or data that are not part of the record, appellees may follow the usual practice in cases of this kind of presenting such material in their brief.

This is not the ordinary case in which a party's failure in the lower court to make an argument which might have been dispositive bars it from raising the point at the appellate level. Cf. *Hormel* v. *Helvering,* 312 U.S. 552, 556–558. In this case the government presented to the district court every issue which that court could decide. Appellees were not prejudiced in connection with the government's presentation of evidence on those issues by any belief they may have had that the government on an appeal to this Court would not raise here another issue which only this Court could decide.

II

IN ANY EVENT, THE AGREEMENT THAT TOWNSEND WOULD FOLLOW HUCK'S PRICES AS LONG AS IT REMAINED THE SOLE LICENSEE, AND THAT HUCK WOULD GRANT NO OTHER LICENSES AS LONG AS TOWNSEND FOLLOWED ITS PRICES, WAS AN ILLEGAL RESTRAINT OF TRADE WHICH *GENERAL ELECTRIC* DOES NOT SANCTION

The record shows that Huck wanted Townsend to observe its prices because the latter was a low-cost producer.[27] It also shows that Townsend wanted to be the sole licensee for the life of the patents on products which the companies wanted to make.[28] The written agreement provided that Huck would grant no other licenses for two years, and that Townsend would follow Huck's prices during that period.[29] Townsend's representative, however, orally proposed that it would continue to observe the Huck prices for the duration of the agreement (which was for the life of the last patent licensed), if Huck granted no additional licenses.[30] Huck's representatives responded that it would not issue any more licenses on products which either company wished to manufacture if Townsend adhered to Huck's price structure.[31]

This arrangement, we submit, is not sanctioned by the *General Electric* rule, and is unlawful *per se*. The price fixing cannot be justified as "normally and

---

[27] R. 193.

[28] R. 67.

[29] R. 472 (GX 17, par. 12).

[30] R. 67. The licensed "patents" included those to be issued on pending application and on improvements (R. 469, 470). Cf. *Brulotte* v. *Thys*, 379 U.S. 29.

[31] R. 70.

reasonably adapted to secure pecuniary reward for the patentee's monopoly" (*United States* v. *General Electric,* 272 U.S. at 490), since Townsend undertook to follow Huck's prices not in return for the right to use Huck's patents (which it would continue to have whether or not it followed such prices), but to assure that Huck would not license anyone else. Huck's commitment to grant no additional licenses was not an exercise of its power to exclude, but a limitation upon that power which it assumed in return for its licensee's price fixing commitment. Any agreement whereby the patentee surrenders his freedom to license others is of doubtful validity even when price fixing is not involved. See *United States* v. *Besser Manufacturing Company,* 96 F. Supp. 304, 311 (E.D. Mich.), affirmed, 343 U.S. 444; *United States* v. *Krasnov,* 143 F. Supp. 184, 201–202 (E.D. Pa.), affirmed, 355 U.S. 5; cf. *Blount Mfg. Co.* v. *Yale & Towne Mfg. Co.,* 166 Fed. 555, 559 (D. Mass.). *A fortiori,* such an agreement cannot justify an agreement to fix prices.

Moreover, as a practical matter, such a loose and informal surrender of the patentee's freedom to license in return for a price-fixing agreement inevitably invites concerted action in regulating access to the patents. For whenever Huck might otherwise be inclined to grant a license, it would inevitably be most reluctant to do so over Townsend's objection, and thus run the risk of price-cutting by the latter. At the same time Huck naturally would seek Townsend's agreement to the issuance of a new license that might be advantageous to Townsend. Just as "lawful in-

dividual monopolies granted by the patent statutes cannot be unitedly exercised to restrain competition" (*Standard Oil Co.* v. *United States,* 283 U.S. 163, 174), so competitors may not share the power to exclude which the patent laws give only to the owner of a patent. *United States* v. *Line Material,* 333 U.S. 287, 311; *United States* v. *Terminal Railroad Assn.,* 224 U.S. 383; *Associated Press* v. *United States,* 326 U.S. 1; *Klor's* v. *Broadway-Hale Stores,* 359 U.S. 207.

This Court, because of the anticompetitive implications of the *General Electric* decision, has consistently given it a narrow scope (see *supra,* pp. 39–41, 43). In keeping with that approach, the *General Electric* rule should not be permitted to sanction a license agreement in which price fixing is combined with a patentee's commitment not to deal with others, these restraints serving as reciprocal inducements.

CONCLUSION

The judgment of the district court should be reversed, and the cause should be remanded for further proceedings.

Respectfully submitted.

RALPH S. SPRITZER,
Acting Solicitor General.
DONALD F. TURNER,
Assistant Attorney General.
FRANK GOODMAN,
Assistant to the Solicitor General.
ROBERT B. HUMMEL,
JON D. HARTMAN,
Attorneys.

AUGUST 1965.

U.S. GOVERNMENT PRINTING OFFICE: 1965

LIBRARY
SUPREME COURT, U. S.

Office-Supreme Court, U.S.
FILED
SEP 24 1965
JOHN F. DAVIS, CLERK

IN THE

Supreme Court of the United States

OCTOBER TERM, 1965

No. 8

UNITED STATES OF AMERICA,
Appellant,

—v.—

HUCK MANUFACTURING COMPANY and TOWNSEND COMPANY,
Appellees.

ON APPEAL FROM THE UNITED STATES DISTRICT COURT FOR THE EASTERN DISTRICT OF MICHIGAN

BRIEF FOR APPELLEES

PAUL A. PORTER
DENNIS G. LYONS
1229 Nineteenth Street, N.W.
Washington, D.C. 20036

JOHN A. BLAIR
J. KING HARNESS
JOHN C. STERRITT
700 Fisher Building
Detroit, Michigan 48202

ALBERT M. STERN
2388 First National Building
Detroit, Michigan 48226

Attorneys for Appellee Huck Manufacturing Company

THOMAS W. POMEROY, JR.
S. K. McCUNE
W. WALTER BRAHAM, JR.
1100 Oliver Building
Pittsburgh, Pennsylvania 15222

Attorneys for Appellee Townsend Company

Of Counsel:
ARNOLD, FORTAS & PORTER
Washington, D. C.
HARNESS, DICKEY & PIERCE
Detroit, Michigan
STERN and ROSSIER
Detroit, Michigan
KIRKPATRICK, POMEROY, LOCKHART & JOHNSON
Pittsburgh, Pennsylvania

September, 1965.

INDEX

	Page
Opinions Below	1
Questions Presented	2
Statement	2
Summary of Argument	18
Argument	24
Introduction	24
I. This Case is Procedurally Inappropriate for a Reconsideration of the *General Electric* Rule	30
II. The Record of This Case Cannot Support an Informed Judgment That *General Electric* Should be Overruled	40
A. The Record does not Afford a Basis for Resolution of the Issues which must be Resolved Before a Decision to Overrule *General Electric* Could be Made	40
B. The Arguments Made in Favor of Overruling *General Electric* Are Void of Factual Support on the Present Record	55
III. The Pragmatic Reasons Advanced by the Government for Overruling *General Electric* are Without Substance	68
IV. The Arrangements Shown or Suggested by The Present Record Are Permitted by the *General Electric* Rule	75
Conclusion	81

Page

CITATIONS

CASES:

Adams v. Burks, 17 Wall. 453 (1873) 45
Associated Press v. United States, 326 U. S. 1 (1945) ..78, 79
Automatic Radio Mfg. Co. v. Hazeltine Research, Inc., 339 U. S. 827 (1950) 47
Barber-Colman Co. v. National Tool Co., 136 F. 2d 339 (6th Cir. 1943) 27, 71
Bauer v. O'Donnell, 229 U. S. 1 (1913) 77
Becton, Dickinson & Co. v. Ersel & Co., 86 F. 2d 267 (6th Cir. 1936) 77
Bement v. National Harrow Co., 186 U. S. 70 (1902) 77
Blount Mfg. Co. v. Yale & Towne Mfg. Co., 166 Fed. 555 (D. Mass. 1909) 78
Brownell v. Ketcham Wire & Mfg. Co., 211 F. 2d 121 (9th Cir. 1954) 77
Brulotte v. Thys Co., 379 U. S. 29 (1964) 43
Cummer-Graham Co. v. Straight Side Basket Corp., 142 F. 2d 646 (5th Cir. 1944), *cert. denied,* 323 U. S. 726 (1944) 26, 71
Duignen v. United States, 274 U. S. 195 (1927) 32
Ethyl Gasoline Corp. v. United States, 309 U. S. 436 (1940) 26, 79
Fowler v. Crown-Zellerbach Corp., 163 F. 2d 773 (9th Cir. 1947) 32
General Electric Co. v. Willey's Carbide Tool Co., 33 F. Supp. 969 (E. D. Mich. 1940) 72
Giordenello v. United States, 357 U. S. 480 (1958) 32
Glen Raven Knitting Mills, Inc. v. Sanson Hosiery Mills, Inc., 189 F. 2d 845 (4th Cir. 1951) 69
Hayward v. Andrews, 106 U. S. 673 (1882) 77
Helvering v. Cement Investors, Inc., 316 U. S. 527 (1942) 32
Industrial Ass'n v. United States, 268 U. S. 64 (1925) .. 16
James P. Marsh Corp. v. United States Gauge Co., 129 F. 2d 161 (7th Cir. 1942) 61

Page

Klor's, Inc. v. Broadway-Hale Stores, Inc., 359 U. S. 207 (1959) 78
Newburgh Moire Co. v. Superior Moire Co., 237 F. 2d 283 (3d Cir. 1956) 26, 70
Newburgh Moire Co. v. Superior Moire Co., 105 F. Supp. 372 (D. N. J. 1952) 26
Northern Pac. R. Co. v. United States, 356 U. S. 1 (1958) 64
Prestole Corp. v. Tinnerman Products, Inc., 271 F. 2d 146 (6th Cir. 1959) 69, 70
Ronson Patents Corp. v. Sparklets Devices, Inc., 112 F. Supp. 676 (E. D. Mo. 1953) 69
Simpson v. Union Oil Co., 377 U. S. 13 (1964) 27, 45
Sinclair Refining Co. v. Howell, 222 F. 2d 637 (5th Cir. 1955) 32
Sola Electric Co. v. Jefferson Electric Co., 317 U. S. 173 (1942) 27
Standard Oil Co. v. United States, 283 U. S. 163 (1931) 78
Standard Sanitary Mfg. Co. v. United States, 226 U. S. 20 (1912) 26
Straight Side Basket Corp. v. Webster Basket Co., 82 F. 2d 245 (2d Cir. 1936) 71
The Monrosa v. Carbon Black Export, Inc., 359 U. S. 180 (1959) 38
United States v. Aluminum Co. of America, 148 F. 2d 416 (2d Cir. 1945) 44, 72
United States v. Austenal Laboratories, Inc. (Civ. 50-496, S. D. N. Y. 1949) 73
United States v. Besser Mfg. Co., 96 F. Supp. 304 (E. D. Mich. 1951), *aff'd*, 343 U. S. 444 (1952) 78
United States v. Colgate & Co., 250 U. S. 300 (1919) 65
United States v. Driver-Harris Co. (Civ. 942-56, D. N. J. 1956) 73
United States v. Eastman Kodak Company, CCH 1954 Trade Cas. para. 67,920 (W. D. N. Y. 1954) 53

Page

United States v. E. I. duPont de Nemours & Co., 11 F. R. D. 308 (D. Del. 1951) 32
United States v. E. I. duPont de Nemours & Co., 118 F. Supp. 41 (D. Del. 1953), *aff'd*, 351 U. S. 377 (1956) 61, 78
United States v. E. I. duPont de Nemours & Co., 351 U. S. 377 (1956) 53
United States v. Fallbrook Public Utilities District, 165 F. Supp. 806 (S. D. Cal. 1958) 32
United States v. General Electric Co., 272 U. S. 476 (1926) ..... passim
United States v. General Electric Co., 80 F. Supp. 989 (S. D. N. Y. 1948) 72
United States v. General Electric Co., 82 F. Supp. 753 (D. N. J. 1949) 69, 72
United States v. Krasnov, 143 F. Supp. 184 (E. D. Pa. 1956), *aff'd*, 355 U. S. 5 (1957) 73, 78
United States v. Line Material Co., 333 U. S. 287 (1948) 26, 30, 60, 68, 69, 70, 71, 73, 78
United States v. Line Material Co., 64 F. Supp. 970 (E. D. Wis. 1946) 30
United States v. Michigan Tool Co. (Crim. 33671 and Civ. 12605, E. D. Mich. 1953) 74
United States v. Minnesota Mining & Mfg. Co. (Crim. 61-73-D, E. D. Ill. 1961) 73
United States v. Minnesota Mining & Mfg. Co. (Civ. 8-119, D. Mass. 1949) 74
United States v. New Wrinkle, Inc., 342 U. S. 371 (1952) 25, 26, 60, 62
United States v. Oregon State Medical Soc'y, 343 U. S. 326 (1952) 16
United States v. Paramount Pictures, Inc., 334 U. S. 131 (1948) 25
United States v. Parke, Davis & Co., 362 U. S. 29 (1960) 65
United States v. Robertshaw-Fulton Controls Co. (Civ. 14745, W. D. Pa. 1956) 73

Page

United States v. Scott & Williams, Inc. (Civ. 54-358, S. D. N. Y. 1949) 73
United States v. Shubert, 15 F. R. Serv. 33.333, Case 1 (S. D. N. Y. 1951) 32
United States v. Singer Manufacturing Co., 374 U. S. 174 (1963) 37
United States v. Terminal Railroad Ass'n, 224 U. S. 383 (1912) 78
United States v. United Shoe Machinery Corp., 110 F. Supp. 295 (D. Mass. 1953), *aff'd*, 347 U. S. 521 (1954) 74
United States v. United States Gypsum Co., 333 U. S. 364 (1948), 340 U. S. 76 (1950) 25, 27, 60, 62, 70
United States v. Vehicular Parking, Ltd., 54 F. Supp. 828 (D. Del. 1944) 27
Virginian R. Co. v. Mullens, 271 U. S. 220 (1926) 32
Westinghouse Electric Co. v. Bulldog Electric Products Co., 179 F. 2d 139 (4th Cir. 1950) 71
White Motor Co. v. United States, 372 U. S. 253 (1963) 19, 34, 36, 49, 55, 64

STATUTES AND RULES:

Expediting Act, 32 Stat. 823 (1903), as amended, 15 U. S. C. §29 ..... 20, 23, 37

Federal Rules of Civil Procedure
Rule 16 31
Rule 41(b) 31

Sherman Act, 26 Stat. 209 (1890), as amended, 15 U. S. C. §1, *et seq.* 2, 5, 18, 24, 26, 27, 29, 34, 62, 70, 78, 79, 80
28 U. S. C. §1498 41
35 U. S. C. §154 77

MISCELLANEOUS:

Barnard & Zlinkoff, Patents, Procedure and the Sherman Act, 17 Geo. Wash. L. Rev. 1 (1948) 49

Page

Crawford, Patents, Profits and Pirates; An Interview with Thomas A. Edison, Saturday Evening Post, Sept. 27, 1930 28

Diggins, The Patent-Antitrust Problem, 53 Mich. L. Rev. 1093 (1955) 65

Dominick, Recent Developments in the Law of Price Restrictions in Patent License Agreements, 11 Geo. Wash. L. Rev. 302 (1943) 49

Furth, Price-Restrictive Patent Licenses Under the Sherman Act, 71 Harv. L. Rev. 815 (1958) 62, 66

Gibbons, Price Fixing in Patent Licenses and the Antitrust Laws, 51 Va. L. Rev. 273 (1965) 44, 46, 47, 54, 60, 65

Harris & Siegel, Evolving Court Opinion on Patent Licensing, 5 Patent, Trademark and Copyright J. 103 (1961) 42

Hearings, Part III, U. S. Temporary National Economic Committee (1939) 51

Jewkes, Sawers & Stillerman, The Sources of Invention (1958) 48, 50, 53

Kareken, Antitrust and the Exploitation of Patents, 8 Patent, Trademark & Copyright J. 107 (1964) 43, 54

Kaysen & Turner, Antitrust Policy (1959) 44, 63

Kottke, Electrical Technology and the Public Interest (1944) 47

Land, The Role of Patents in the Growth of New Companies, 41 J. P. O. S. 502 (1959) 50

McCarthy, A Patent Licensing Policy for Minimizing Antitrust and Misuse Risks, 46 J. P. O. S. 547 (1964) 43

Page

Note, Antitrust Problems in Patent Pooling and Multiple Licensee Agreements, 20 U. Pitt. L. Rev. 54 (1958) 67

Note, Patent Price Restrictions and the Antitrust Laws: A Balance Upset, 67 Yale L. J: 700 (1958) 44, 54, 60

Note, Patent Use Restrictions, 75 Harv. L. Rev. 602 (1962) 52

Note, Price Fixing Through Patent Licensing, 61 Harv. L. Rev. 1427 (1948) 49

Note, 55 Mich. L. Rev. 726 (1957) 43

Note, 2 Rutgers L. Rev. 254 (1948) 49, 66

Note, 96 U. Pa. L. Rev. 126 (1947) 67

Report, Attorney General's National Committee to Study the Antitrust Laws (1955) 66

Report, Part I-IV, Temporary National Economic Committee 51

Schumpeter, Capitalism, Socialism and Democracy (3d ed. 1950) 47

Stedman, "Legal Problems in the International and Domestic Licensing of Know-How," Address before Section Meeting of the American Bar Association, Miami, August 8, 1965 28

Study No. 3 of the Subcommittee on Patents, Trademarks and Copyrights, Senate Judiciary Committee, 84th Cong., 2d Sess. (1956) 52

Study No. 26 of the Subcommittee on Patents, Trademarks and Copyrights, Senate Judiciary Committee, "The Patent System: Its Economic and Social Basis," 86th Cong., 2d Sess. (1960) 52

Turner, Antitrust Policy and the Cellophane Case, 70 Harv. L. Rev. 281 (1956) 67

Page

Williams, Conflicting Landmark Decisions on Restrictive Patent Licenses, 10 Antitrust Bull. 295 (1965) 68

Wood & Johnson, Patents and the Antitrust Laws, 1950 Univ. of Ill. L. Forum 544 ..... 52, 69

S. 270, 77th Cong., 2d Sess. (1942) 66

S. 2491, 77th Cong., 2d Sess. (1942) 66

S. 2730, 77th Cong., 2d Sess. (1942) 66

S. 2482, 79th Cong., 2d Sess. (1946) 66

S. 72, 80th Cong., 1st Sess. (1947) 66

H. R. 7713, 77th Cong., 2d Sess. (1942) 66

H. R. 109, 78th Cong., 1st Sess. (1943) 66

H. R. 1371, 78th Cong., 1st Sess. (1943) 66

H. R. 3874, 78th Cong., 1st Sess. (1943) 66

H. R. 97, 79th Cong., 1st Sess. (1945) 66

H. R. 3462, 79th Cong., 1st Sess. (1945) 66

IN THE

Supreme Court of the United States

OCTOBER TERM, 1965

No. 8

UNITED STATES OF AMERICA,

Appellant,

—v.—

HUCK MANUFACTURING COMPANY and TOWNSEND COMPANY,

Appellees.

ON APPEAL FROM THE UNITED STATES DISTRICT COURT
FOR THE EASTERN DISTRICT OF MICHIGAN.

BRIEF FOR APPELLEES

OPINIONS BELOW

The opinion of the District Court dismissing the complaint on motion under Rule 41 at the close of the Government's case is reported at 227 F. Supp. 791, and appears at R. 700-22. The opinion of another district judge in the District Court for the Eastern District of Michigan, granting motions for judgments of acquittal at the close of the Government's case in a companion criminal prosecution against appellees and their presidents, is reported at 214 F. Supp. 776.

QUESTIONS PRESENTED

1. Whether this Court should relieve the Government from its repeated waiver in the District Court of any intention to challenge the doctrine of the *General Electric* case (*United States* v. *General Electric Co.*, 272 U. S. 476 (1926)) in this matter, and permit the question of the continuing validity of that case to be raised for the first time on direct appeal to this Court?

2. Whether the present record permits the conclusion that the *General Electric* case should no longer be considered to be a proper accommodation of the antitrust laws and the patent laws, and should be overruled by this Court?

3. Whether the agreement alleged to exist here between a patentee and its licensee, whereby in return for an exclusive license for the life of the patent the licensee agreed to maintain the patentee's prices in the sale of the patented items, would, if proved, amount to a violation of Section 1 of the Sherman Act, the rule of the *General Electric* case notwithstanding?

STATEMENT

This appeal arises out of the civil side of companion civil and criminal antitrust actions filed against Huck Manufacturing Company ("Huck") and Townsend Manufacturing Company ("Townsend") by the United States in October, 1961. The indictment in the criminal case and the complaint in the civil case were couched in substantially similar terms. Each charged a combination and con-

spiracy in unreasonable restraint of trade in violation of Section 1 of the Sherman Act, and a combination and conspiracy "to monopolize the aforesaid[1] interstate trade and commerce in lockbolts" in violation of Section 2 of the Sherman Act. (See Complaint, para. 14, R. 4.) The Complaint did not identify the trade and commerce involved other than by explaining what "lockbolts" were.

The Criminal Trial[2]—The criminal trial took place first and was held before Judge Kaess in the District Court for the Eastern District of Michigan, and a jury, in February and March, 1963. It was undisputed at the trial that lockbolts are a form of fastening device used to join pieces of metal; that the lockbolt is used in the aircraft industry,[3] in the construction of trucks, trailers, railroad cars, and ships, and in various other industrial applications. (R. 42-43, 336) Conventional nuts and bolts, rivets and other specialized fasteners are alternative methods of fastening to lockbolts. (R. 366)

The evidence showed that lockbolts in the form sold by appellees are patented products. The basic patents are U. S. Patents Nos. 2,531,048 and 2,531,049, which were issued on November 21, 1950, to Huck Manufacturing Company as assignee of the inventor, Louis Huck, the founder and president of the company. These patents will expire

---

[1] The "aforesaid" trade was not more precisely defined than as the domestic trade in lockbolts. (Complaint, paras. 6-13, R. 2-3)

[2] For reasons which will be developed later (pp. 10-11), the transcript of the criminal trial constituted the evidence in the civil case. Thus the references to the record on appeal which we make at this point are in fact references to the transcript of the criminal case.

[3] Though in competition with other fasteners; at least one airframe manufacturer never used lockbolts at all. (R. 366) The record, for reasons that will be developed later, does not indicate the proportions of use of lockbolts and of use of substitute fasteners by those airframe manufacturers who did make use of lockbolts.

on November 21, 1967. The validity of these patents was not, and has not been, challenged by the Government.

Huck and Townsend each are engaged in the manufacture of lockbolts. Huck's plant is in Detroit and Townsend's plants are at Santa Ana, California, and Ellwood City, Pennsylvania. Both Huck and Townsend sell lockbolts throughout the United States. (R. 2, 9, 13)

Both Huck and Townsend are small producers. Total domestic sales of lockbolts by Huck and Townsend in 1960 amounted to about $6 million. Huck's sales were about $3.5 million and Townsend's about $2.5 million. (GX 80, 103, R. 614, 643)

In September, 1954, Huck entered into a patent licensing agreement with Townsend. (GX 17; R. 469) The patent license covered the basic patents identified above, certain earlier patents, and two subsequent patent applications for improvements owned by Huck. A five per cent royalty was provided for on the net selling price of all devices manufactured and sold by Townsend which were covered by any of the patents licensed.[4] (Para. 2, R. 470) The agreement provided that the license would be exclusive for the first two years of its life, and that during that period Townsend was "to maintain at least Huck's prices" on the licensed products. (Para. 12, R. 472) Apart from this, the license was nonexclusive and there were no price restrictions.[5] (Para. 1, R. 470)

---

[4] There were also provisions designed to make sure that Townsend's quality was up to Huck's standards. (Paras. 9, 10, 11, 17, R. 471-72, 473) Certain other provisions were aimed at the accurate computation and payment of the specified royalties. (Paras. 3, 4, 5, 6 and 7, R. 470-71)

[5] Townsend also granted back to Huck a nonexclusive, royalty-free license, containing no price maintenance provision, on improve-

At the criminal trial, the Government did not challenge the rule of the *General Electric* case, *United States* v. *General Electric Co.*, 272 U. S. 476 (1926), that a patent owner who manufactures and sells patented articles may, without violation of the Sherman Act, license another to make and sell the patented articles and require the licensee, as to those articles, to observe and follow the patent owner's prices. Rather, it sought to prove that the conduct of Huck and Townsend went beyond that allowable under *General Electric*.

The Government's evidence at the criminal trial, which took place in February and March, 1963, consisted of certain documentary evidence and the oral testimony of four witnesses, all of them former employees of Huck or of Townsend.[6] The principal witness was one Robert Looker. He was the stepson of Louis Huck, founder and president of Huck Manufacturing Company. He joined Huck in 1947 and rose in the company until, in 1954, he became its highest ranking sales executive. From 1954 until 1956, Looker had principal responsibility for Huck's patent matters including its patent licensing policies. (R. 53)

Looker left Huck in August, 1956, to become president of Brown-Line Corporation ("Brown-Line"), a company which made various products used in the aviation industry but which did not manufacture lockbolts. Commencing in

---

ment or substitute lockbolt devices invented by Townsend. (Para. 8, R. 471) Subsequently, Huck issued certain other licenses to Townsend on a nonexclusive basis and with no price restriction provisions. These other licenses, which are not challenged in this Court, were the lockbolt stump and collar license (GX 19; R. 476); a license and a sales agreement covering lockbolt installation tools (GX 70, 71; R. 567, 579); and a "know-how" license covering blind lockbolts. (GX 72, R. 584)

[6] An FBI photographer also briefly testified to identify certain pictures of lockbolts. (R. 320)

1956, Looker wrote a series of letters on behalf of Brown-Line seeking to obtain from Huck a license under Huck's lockbolt patents.[7] (GX 60, 61, 64, 65; R. 559, 560, 562, 563-64) Huck declined to issue such a license. In 1958, Looker began a correspondence with the Department of Justice urging the Department to take action against Huck under the antitrust laws.[8] (R. 237-39, 252-70, 657-58, 664-72)

Looker testified that he had participated in the negotiations which culminated in the licensing agreement between Huck and Townsend in September, 1954. Looker testified that he attended a meeting some time before that agreement was executed, in the offices of Harness, Dickey & Pierce, Huck's attorneys in Detroit, at which the license was negotiated. (R. 59-60; 182)

Looker testified that there came a time during this meeting when the attorneys for Huck and Townsend, who had been engaged in working out the proposed terms of the license agreement, were asked to leave the room, and that the

---

[7] The Government erroneously states that the license which Brown-Line requested was simply for lockbolts of a sort not manufactured by Huck. (Gov't Br., p. 8, n. 5) Actually, Brown-Line sought a license generally to manufacture lockbolts under certain described Huck patents, including those manufactured by Huck. (GX 60, 61, 63, R. 559-61) The only exclusion from Brown-Line's request was for those devices which were manufactured and sold by Huck "as standard parts". (GX 60, R. 559)

[8] This correspondence led into other matters, such as Looker's passing on reports of price-fixing among certain of Brown-Line's competitors in the aircraft seat fittings industry (in which Huck and Townsend do not participate), congratulations to the Justice Department for its "splendid work" in the Philadelphia electrical industry price-fixing case, explanation in response to a letter from Assistant Attorney General Bicks as to how certain personal papers of Mr. Huck happened to come into Looker's possession, expressions of fears that the Department would "negotiate" with Huck, anticipatory refutations of any "malice" existing between him and Huck, and so forth. (Defs. Exs. R, S, U, V, X, R. 664-68, 671)

meeting thereafter continued without them for a period of about 45 minutes. (R. 63-64, 72) On cross-examination, Looker admitted that the occasion for asking the attorneys to leave the room was, however, the outbreak of acrimony involving the attorneys. The attorney for Townsend had stated that a statement the attorney for Huck had made amounted to "a fine way to call a guy an S.O.B." Looker stated that more than the initials were used. (R. 307)

After the attorneys had been asked to leave the room, according to Looker, Townsend's president proposed that the companies enter into what Looker characterized as a "supplementary verbal agreement to the effect that the Townsend Company would not violate the Huck lockbolt price structure during the life of the agreement, if the Huck Manufacturing Company refused to, or restrained themselves from issuing patent licenses to potential competitors to the Townsend Company." (R. 67) Looker testified that the president of Huck thereafter said, "as best I can recall, words to the effect that 'then we won't issue more loekbolt patent licenses if you keep our price structure for lockbolt devices.'"[9] (R. 69) The record does not indicate why the parties should have been unwilling to put

[9] The only other evidence offered in support of Looker's story by the Government was a handwritten notation appearing in the margin of a letter written in April, 1951, from Huck's attorneys to the executive vice president of Huck. (GX 27, R. 509) The letter, written more than three years before the issuance of the license, on an earlier occasion when licensing Townsend was being contemplated, discussed the various provisions which might be put in a patent license. Opposite the attorneys' discussion of an exclusivity clause, there appeared the handwritten notation "?—not in writing—agreed for period of (3) yrs. in writing." There was no evidence as to when this handwritten note was put on or what it meant. Various other handwritten notes in the margin of the letter relating to royalties were at variance with the actual terms of the 1954 license granted to Townsend. (R. 510)

this alleged provision in the written agreement, which as later executed in fact contained such a provision for a two-year period.

It was developed on cross-examination that Looker had, after the commencement of this action, filed a treble damage suit against Huck based on Huck's failure to grant Brown-Line a license. That claim was based entirely on damages said to accrue after the expiration of the two-year period of exclusiveness provided for in the license agreement, and, of course, after the time that Looker left Huck to join Brown-Line.[10] Looker admitted that: "We feel now that we can afford a low-cost case [in his private antitrust suit], so to speak, if we have a prima facie case."[11] (R. 285)

It was also brought out on cross-examination that on a number of occasions Looker recognized that Huck was not bound to maintain any exclusiveness after September, 1956, and that the price restrictions would expire then. (R. 219, 273; Defs. Ex. Y, R. 672-73; GX 59, 60, 61, 64, R. 558-60, 562) Thus, in a memorandum of August, 1955, when he was still with Huck, Looker stated, with reference to a request for a license, that "Although we may not be at liberty to grant such a license at this time, we will be in a little over a year from now." (Defs. Ex. Y, R. 673) A memorandum written by Looker shortly before he left Huck, and about four months before the end of the two-year period, suggested that Huck license another source. (GX 59, R. 558) And a memorandum written by Looker

[10] Looker left in August, 1956, before the two-year period was up.

[11] Since Looker's company was not a user of lockbolts, it could well be said that it was not damaged by the price-restrictive provision (if it were unlawful); and in any event its damages would be hard to prove. Therefore, it was essential to Looker's "low-cost case" that the allegedly exclusive feature of the license in the post-1956 period be established and held to be unlawful.

in December, 1955, to Huck's president reflected that the price restrictions upon Townsend would expire at the close of the "balance of the two-year period." (GX 44, R. 542)

The proofs indicated that on various occasions before and after the close of the two-year period Huck refused to grant licenses for a general line of lockbolts to other companies. (Olympic Screw and Rivet Company, R. 102-03; R. 398-99; GX 66, 68, R. 564-66; GX 92, R. 628; GX 98, R. 636; Republic Steel Corporation, R. 104-05; Illinois Tool Works, GX 78, R. 611; Pheoll Manufacturing Company, R. 99-100) The record contained no evidence that Townsend participated in these refusals or that it was even aware that applications for licenses had been made by any of these companies to Huck. Huck licensed two firms, without price restrictions, to make titanium lockbolts; a metal in which neither it nor Townsend worked. (Fdg. 22, R. 712) There was no evidence of the extent to which titanium lockbolts competed with those of other metals.

At the close of the Government's case, Judge Kaess granted motions for a judgment of acquittal on the charges both under Section 1 and under Section 2. Judge Kaess held that, for the purposes of the motion, the Government had established "at least prima facie" [12] that Huck had a continuing arrangement with Townsend under which Huck determined the selling prices of the patented product and under which no other firm was licensed. 214 F. Supp., at 777. However, Judge Kaess held that, even assuming an arrangement of the sort to which Looker testified, no violation of the Sherman Act could be inferred. Noting that the Govern-

[12] Clearly such an arrangement was shown *prima facie*, inasmuch as Looker testified to it. Judge Kaess was sitting with a jury (R. 18) and had no basis to pass on Looker's credibility in this connection; he had to accept it for purposes of passing on the motion.

ment "has indicated that it does not consider the problem of defining the relevant market to be part of its case" and that it had not offered evidence as to the positions of Huck and Townsend in the fastener industry generally, he concluded that: "It has not been shown that the object of defendants' patent arrangement was to secure a greater reward than that attributable to the superiority of the products, or to achieve monopoly power." (214 F. Supp., at 777, 779)

The formulation of the issues in the civil case.—In pretrial conferences in the civil case held in October, 1962, it was established that: "The Government is proceeding on the same theory of law in this case as it has advanced in the criminal case." (R. 767) There was an initial pretrial conference held on October 1 at which the Government undertook to restudy the matter and to advise the defendants of its position as to the applicability of the *General Electric* case.

After a two-week study, the Government advised the court and the parties on October 15, 1962, that the *General Electric* doctrine "is still good law" and that it was not "attempting to have the doctrine set in the General Electric case overruled." The pretrial order resulting from that conference[13] recited that "[T]he Government stated that it is not attempting to have the doctrine set in the General Electric case overruled and stated only that facts in this case do not fall within that doctrine; that the

[13] The pretrial order in question was not entered until after the Government filed its notice of appeal to this Court. Then, after a hearing at which the order was amended to reflect the concessions made by the Government in October, 1962, as reflected in the notes of the Judge's law clerk taken at the time (R. 755-56), the order was entered. The Government attempts to belittle the order in its brief (pp. 46-47) but does not challenge its accuracy in this Court; in fact, its accuracy was conceded below. (R. 756)

doctrine is still good law but does not apply as the actions in this case are illegal without application of the doctrine." (R. 767-68)

Shortly after the October 15 pretrial conference, Assistant Attorney General Loevinger sent a confirmatory letter to Judge Machrowicz, to whom the civil case had been assigned, advising of the legal theory which the Government intended to follow in the civil case. The letter was restricted to a description of the way the facts of the case, according to the Government's contentions, differed from the facts of *General Electric*. It concluded: "Accordingly, we submit that the facts of this case fall outside the facts and law of *United States* v. *General Electric*, supra." (R. 779-81)

After this position was taken, and subsequent to the trial of the criminal case, at the instance of the Government, the appellees agreed that the entire Record in the criminal action "is to be placed in evidence in this [the civil] action subject to all objections appearing therein. Such Record shall constitute the plaintiff's case-in-chief in this action and on which plaintiff will rest. Defendants will move by April 15, 1963 pursuant to the Federal Rules of Civil Procedure for a dismissal of this action on that Record." (R. 17) Thereafter, the Government submitted the transcript of the criminal case to Judge Machrowicz, sitting in the civil case, and appellees moved to dismiss under Rule 41(b) of the Federal Rules of Civil Procedure. (R. 694) Once again, the Government in its trial brief specifically took the position that it would establish its antitrust charges on the basis that the conduct in question fell outside the limits of permissible conduct under the *General Electric* decision. (Gov't Tr. Br., p. 50)

The civil case and the District Court's findings.—After oral argument (R. 696-99), held in April, 1963, Judge Machrowicz, following an independent study of the record[14] (R. 705), concluded, as had Judge Kaess in the criminal case, that the conduct of Huck and Townsend did not go beyond that permissible under the *General Electric* decision, and that accordingly there should be judgment for Huck and Townsend at the close of the Government's case. (R. 700-22)

The District Court found that Huck's position in licensing Townsend in 1954 was that it "wanted to issue no more licenses under lockbolt patents than it believed would adequately supply the demand for the patented lockbolts and alleviate the difficulties it faced, namely, the demand of customers for a second source of supply, and delay in meeting delivery dates specified by the customers."[15] (Fdg. 13, R. 708)

The District Court's findings discussed Looker's testimony as to the alleged oral agreement simply as being Looker's testimony, and made no finding of the existence of any such agreement.[16] (Fdg. 15, R. 709) The court did, however, find that Looker, "inconsistent with his pres-

---

[14] No collateral estoppel or *res judicata* effect has been or is contended for as between the judgment in the criminal case and this case.

[15] Thus, Douglas Aircraft Company complained about Huck's deliveries and requested that a second source be established. Others complained of delivery schedules during the period when Huck was a sole producer. (R. 56, 58)

[16] After referring four times to the alleged oral agreement as "the testimony of Looker," or Looker's or the Government's "contention" (Fdgs. 15 and 16, R. 709-11), the District Court once failed to repeat this qualification in referring to it. (Second sentence, Fdg. 16, R. 711) The Government's Brief attempts to escalate this omission into an acceptance of Looker's testimony. (Gov't Br., p. 4, n. 4)

ent contention that Huck was prohibited from granting licenses under its lockbolt patents to others than Townsend by the alleged verbal agreement with Townsend, recognized . . . that Huck Manufacturing Company was free to grant such licenses." [17] (Fdg. 15, R. 710)

The District Court found that Huck kept its customers and Townsend advised by published price lists of the prices, terms and conditions of sale, established by Huck, of the patented lockbolts. (Fdg. 17, R. 711) It was found that Townsend "except for occasional deviations, observed and followed substantially the same prices, terms and conditions of sale established and observed by Huck for the sale of the patented lockbolts which Huck manufactured." [18] (Fdg. 18, R. 711)

The District Court did not find that there was any agreement or understanding between Huck and Townsend on prices, after the two-year period specified in the patent license which expired in September, 1956. Moreover, as to the licensee's role, the District Court found that: "There is no evidence in this case that the licensee Townsend was granted, or had, or exercised any power or authority to fix prices under Huck's lockbolt patents for Huck, the patent owner, or any other licensee under the Huck lockbolt patents to follow." [19] (Fdg. 19, R. 711) It found that

---

[17] The court also found that Looker "initiated in the Department of Justice and pressed and followed up the action of the Department which culminated in the criminal action . . . and this present civil action." (R. 710)

[18] On several occasions, Townsend and Huck cut each other's prices and price terms in the post-1956 period. (R. 377-78; 381-82) An internal memorandum in the post-1956 period at Townsend forbade price collaboration with Huck. (Defs. Ex. EE, R. 694) (This antedated the start of Looker's correspondence with the Justice Department.)

[19] The trial court found that there had been certain contacts between Huck and Townsend but that these related to such matters

Townsend did not participate in Huck's refusals to license other companies, and that these refusals were made in the exercise of Huck's independent judgment. (Fdg. 22, R. 712-13)

The District Court also found that the patents covered in the basic license between Huck and Townsend were "conceded to be valid and subsisting and to cover lockbolts which Townsend has manufactured and sold and is presently manufacturing and selling under the license." (Fdg. 21, R. 712) Furthermore, the District Court found that there was no agreement that prevented or restrained Townsend in any way from developing and making and selling lockbolts that would be independent of and avoid Huck's patents. (Fdg. 24, R. 717)

The court also found that there had been no evidence that purchasers of the lockbolts were prevented or restrained from obtaining other fastening devices for like uses available and obtainable in the market at comparable prices. (Fdg. 26, R. 717) It found on the limited proofs in the record that "several types of fasteners other than lockbolts are used or usable for the same purposes as lockbolts." (Fdg. 9, R. 707)

Judge Machrowicz, like Judge Kaess, was moved to comment on the lack of economic evidence in the Government's case and the total absence of any effort to show a relevant market other than one defined simply in terms of the lockbolts covered by the patent claims. He found that while there was evidence "that there are fastening devices

---

as interchangeability, quality control, and the exchange of technical information, and that the contacts "have been in furtherance of legitimate, normal business motives permissible under the patent license" and that they had "not been for the purpose of fixing prices." (Fdg. 20, R. 712)

other than the patented lockbolts which can be and are used for the same purposes and which are regarded as competitive with the patented lockbolts," there was no evidence in the record "to define the industry or market in which the patented lockbolts and other fastening devices available for the same purposes and uses are being sold, or to show its magnitude." (Fdg. 27, R. 717) Thus, the court found "there is no evidence from which the impact or effect of the combination and conspiracy alleged with respect to the patented lockbolts upon the market for the patented lockbolts and the other fastening devices used and usable for the same purposes can be evaluated or determined." (Fdg. 28, R. 717)

The court found that there was no evidence: "that Huck and Townsend had any intention to or did conspire to restrain or monopolize, or did restrain or monopolize, trade or commerce in lockbolts beyond the limits of the lawful patent monopoly granted to Huck as owner of the lockbolt patents," (Fdg. 29, R. 717) or that the arrangement between Huck and Townsend "was designed to or did secure to Huck other than a reasonable reward for the use of exclusive patent rights of which Huck was the owner by the grant to it of the lockbolt patents." (Fdg. 25, R. 717)

The District Court then discussed the applicable law and recited that: "The Government concedes that under the authority of the decision in *U. S.* v. *General Electric Co.*, 272 U. S. 476, the patent owner who manufactures and sells the patented articles can license another to make and sell the patented articles and require the licensee, with respect to the patented devices made and sold by the licensee under the licensor's patents, to observe and follow the licensor's prices, terms and conditions of sale." (R. 718)

After discussing the law, the District Court stated that: "I conclude upon the evidence submitted that the case at bar is in all material respects the same as and ruled by the decision in *U. S.* v. *General Electric Co.*, 272 U. S. 476, 489 . . . . " (R. 721) Accordingly, the court ordered that judgment be entered dismissing the complaint. (R. 722)

The posture on appeal.—The Government then filed a notice of appeal to this Court, abandoning its Section 2 contentions and raising issues only under Section 1. That notice, for the first time, purported to raise the following question: "Whether the decision in *United States* v. *General Electric Co.*, 272 U. S. 476, insofar as it holds that an agreement between a patent owner and its licensee that the licensee will sell the patented product only at prices established by the patentee does not violate Section 1 of the Sherman Act, should be overruled." (R. 723, 764)

* * * * *

It should be observed at this point that Looker's testimony that despite the written terms of the license there was an oral agreement that the exclusive and price-restrictive features of the Huck-Townsend license would continue until 1967, when the basic patents expired—rather than when these features expired by their written terms in September, 1956—constitutes the sole evidentiary basis on which the Government is raising the issue as to whether *General Electric* should be overruled. If Looker's testimony as to the alleged oral agreement is not credited, the exclusiveness and price-restriction features ended nine years ago, and could hardly warrant an injunction in any event.[20]

As to existence of the oral agreement, neither the judge in the criminal case nor the court below made any finding;

---

[20] See, *e.g.*, *United States* v. *Oregon State Medical Soc'y*, 343 U. S. 326, 334 (1952); *Industrial Ass'n* v. *United States*, 268 U. S. 64, 84 (1925).

their approach was that even if the facts were as Looker testified, no violation of the Sherman Act was shown as a matter of law.[21] In neither case, of course, did the defense have any occasion to put on its proofs, since motions for acquittal or dismissal were granted after the Government's case.—It is an understatement to say that Looker's testimony raises a most serious issue of credibility, apparent even on the printed record, in view of his self-contradictions,[22] his obvious interest and bias (R. 261-69; 284-86), and the circumstantial evidence against his assertions.[23]

Accordingly, it is plain that should this Court, despite our contentions, hold either that it is appropriate to re-examine *General Electric,* and overrule it, or that the exclusivity feature allegedly present here was such as to take this case out of the rule of the *General Electric* decision, it would remain to be established on a remand whether in fact there existed the agreement to which Looker testified.

Since there are no enjoinable violations, even on the Government's view of the law, unless Looker's testimony is credited, we shall henceforth in this brief for the purposes of discussing the legal issues make the assumption that the Court below and Judge Kaess in the criminal trial made *ex hypothesi*: that there was an oral agreement that the parties would continue the price maintenance and exclusivity features of the license despite the fact that by their written terms they expired in September, 1956.

---

[21] This was expressly stated in the findings of Judge Machrowicz in the civil case (Fdgs. 15, 16, R. 709-11) and implicit in Judge Kaess' action in granting appellees' motion to dismiss the criminal case after the Government's case, since he was sitting with a jury.

[22] See pp. 8-9, *supra.*

[23] See also Defs. Exs. R, S, V, BB, CC, R. 664-65, 668, 679-88; R. 277-83.

SUMMARY OF ARGUMENT

The *General Electric* rule, accommodating the policies of the patent laws and the antitrust laws, was the product of a unanimous decision by this Court thirty-nine years ago. It recognizes a limited privilege in the owner of a patent, manufacturing under it, to establish a licensed "second source" for the patented product, on a price-restricted basis. The courts have been quick to strike down any attempts to extend the privilege beyond these narrow limits, and have imposed a variety of safeguards to prevent abuses. The *General Electric* privilege has its greatest practical justification in the case of a small manufacturing concern holding patents, such as that presented here. On the present record, the Government is contending that the accommodation between the patent laws and the antitrust laws represented by the *General Electric* case and the decisions interpreting it should be overruled and the "second source" price-restrictive patent license henceforth be held a *per se* violation of the Sherman Act.

I. For a multitude of reasons, it would be hard to devise a more inappropriate case than the present one for this Court to consider the overruling of *General Electric*:

1. The Government expressly and repeatedly waived, in the court below, any intention to question the *General Electric* rule, and in fact after due consideration affirmed that the rule was "good law." It did not simply recognize that the District Court could not overrule the decision; it disclaimed any intent to use this case as an overruling vehicle. There is every reason to hold this waiver conclusive and to decline to relieve the Government of the consequences of it.

2. The appellees relied procedurally in the court below upon the Government's waiver of any attempt to lay a foundation for an attack on *General Electric*. They agreed to the receipt in evidence, as the Government's case in chief, of the transcript of a prior criminal proceeding against them—of course, likewise a proceeding in which the Government did not challenge *General Electric*. They moved for judgment after the Government's case without putting in any economic evidence in justification of the "second source" license involved here. Thus the Court is presented with a record, by reason of the Government's action, in which there is no evidence of the "economic and business stuff" from which arrangements of the sort in question emerge. See *White Motor Co.* v. *United States*, 372 U. S. 253, 263 (1963). Moreover, in reliance on the Government's waiver, the defendants permitted the receipt below of the transcript of the witness Looker's testimony, previously given in the criminal case, thereby permitting the civil trial to proceed without Looker's being observed by the trial judge. Unless Looker's testimony is credited, even if *General Electric* is overruled, there is no basis for any judgment at this point against appellees.

3. Inasmuch as the record presently before the Court consists solely of the Government's case—because the appellees' motions for judgment at the end of the Government's case, made in the light of the Government's disclaimer of any intent to challenge the *General Electric* rule, were granted—it would be inappropriate for the Court to relieve the Government of the consequences of its waiver and to use this case as a vehicle to consider overruling *General Electric*. If reconsideration of *General Electric* is appropriate at this point of time, it would be more suitable judicial administration to await a case presenting the record of a full trial.

4. The action of the Government in raising the question of the overruling of *General Electric* for the first time on appeal to this Court, without a proper record directed to the issues which the Government is now pressing on this Court, is an abuse of the direct appeal provisions of the Expediting Act.

5. Not only is this case presently in no posture for appropriate consideration of the overruling of the *General Electric* decision, but in all probability it will never be in procedurally appropriate form for such consideration. This is because the basic lockbolt patents licensed by Huck to Townsend have only about two years to run. It is doubtful whether, if the cause is remanded for the building of an appropriate record on the new issues tendered by the Government, such a record could be made, the proceedings in the District Court completed, and an appeal reperfected to this Court before the patents in question expire. This circumstance confirms the procedural inappropriateness of this case as a vehicle for reconsideration of the overruling of *General Electric*.

6. Finally, the abstractness of the issue as to whether *General Electric* should be overruled is made even more evident by the fact that the District Court never made any finding that there was an arrangement between the parties here, of the sort which the *General Electric* rule sanctions, at any date subsequent to September, 1956. Again, this circumstance counsels against relieving the Government from the normal consequences of its waiver; were the Government to be relieved from it, the only result might be for this Court to render an advisory opinion.

II. These manifold procedural failings have naturally led to severe substantive gaps in the record, which confirm the inappropriateness of this case as a vehicle for the reconsideration of the *General Electric* rule.

A. Thus, there is no proof in the record, in the context of the fastener industry or any other industry, as to such issues as: The public advantages of having a licensed second source for patented items, albeit subject to a price restriction; the extent to which patentees would choose not to license at all rather than to license other than on a price-restricted basis; the increase in economically undesirable forms of licensing which would attend the abolition of the price-restricted "second source" license; the extent to which industry-wide licensing on a pure royalty basis would supersede price-restrictive "second source" licensing, and the adverse economic and competitive consequences that would attend this result; the effect of the abolition of the price-restricted "second source" license on small business concerns, and the net competitive cost of its abolition in terms of increased economic concentration; the adverse consequences of the increased outright sale or assignment of patents by their owners, as an alternative to "second source" price-restrictive licensing; the adverse economic consequences of exclusive self-production by a patentee; or, the extent to which price-restricted "second source" licensing is availed of by smaller producers and tends to provide for more balanced competition between producers of rival products. Certainly before the Government seeks an overruling of *General Electric* it should endeavor to present to this Court a record at least serving as an object lesson on these questions in the relevant industry to which the case relates.

B. Because of the nature of the record, the Government's affirmative arguments in favor of overruling *General Electric* amount to pure conjecture, assertion and speculation; thin reeds on which to overrule a precedent which has stood for thirty-nine years. The more serious arguments made against the *General Electric* rule by the Government are met by the limitations which the courts have been conscientious in applying to prevent abuses of the *General Electric* privilege, notably by preventing it from being used as part of industry-wide price-fixing patterns through multiple licensing schemes. These abuses are not inherent in the case of a single "second source" license, such as is involved here. The present case presents a situation in which the *General Electric* rule has its greatest practical justification and is susceptible of the most minimal abuse. It counsels against imposing a *per se* rule here. There is no reason shown on this record for departing from the present approach whereby each case of a price-restrictive second source license is judged on its own facts, according to the strict judicial precedents, to determine whether there has been any abuse of the *General Electric* privilege.

There is a serious question as to whether at this juncture the reconsideration of *General Electric* is not a matter more appropriate for Congress than for the courts. But in any event, consideration of overruling it should await a proper record.

III. The pragmatic reasons advanced by the Government for departing from *stare decisis* and overruling *General Electric* are without substance.

1. It is not true that the *General Electric* rule has been so restricted as to afford no benefit to the business

community. Although judicial prevention of abuses may have rendered the rule of little use to the giant industrial concern, it remains of considerable value to the smaller company with limited production capabilities.

2. The *General Electric* rule, at the present time, is not productive of a vast area of uncertainty. The course of adjudication has resolved virtually all of the serious questions as to the rule's applicability, and has resolved them in favor of strict limitation of the privilege. Thus, there is no need, as the Government suggests, to extirpate the rule as a radical cure for any uncertainty.

3. The fact that the rule is presently creating no embarrassment to the effective administration of the antitrust laws is reinforced by the fact that, despite the direct appeal provisions of the Expediting Act, no case presenting a substantial legal question as to the rule's applicability has come before this Court for fifteen years. In fact, in the last decade there have been commenced only three Government antitrust suits attacking abuses of the *General Electric* privilege. Here, again, the need for radical surgery suggested by the Government is overdrawn, and it is strongly suggested that the Government is attempting to foist a purely academic question upon this Court for decision.

IV. The arrangements suggested on the present record are permitted by the *General Electric* rule. Even the Government's proofs do not indicate anything other than a "second source" patent license with an exclusivity feature and a price-maintenance clause, for the life of the basic Huck patents. While the exclusivity feature itself was not found in the *General Electric* case, it is certainly central

to the patentee's statutory powers to exclude whomever he wishes from the practice of his invention. Moreover, an exclusivity feature affords assurance that the price-restrictive patent license will not be extended on an industry-wide basis, and thus raise a serious question of violation of the Sherman Act. Whether a patent license with an exclusivity feature and a price-restrictive clause might possibly amount to a violation of the Sherman Act, under circumstances of the domination of the relevant product market by the patentee and the exclusive licensee, is a question not presented by the present record. The Government's contention on this point thus amounts to no more than a subsidiary of its central point that *General Electric* should be overruled on the present record, and must stand or fall with it.

ARGUMENT

INTRODUCTION

In *United States* v. *General Electric Co.*, 272 U. S. 476 (1926), a unanimous Supreme Court upheld the validity, against challenge by the United States in a suit under the Sherman Act, of a clause in a patent license running from General Electric Company to Westinghouse Electric Company whereby Westinghouse agreed to maintain General Electric's price on the patented light bulbs manufactured and sold by it under the license. The Court recognized the obvious fact that the object of the patent laws is monopoly, granted to stimulate the making of inventions. 272 U. S., at 491. For the Court, the decisive question was whether the price-restrictive clause was "normally and reasonably adapted to secure pecuniary reward for the patentee's monopoly." (272 U. S., at 490) Recognizing that realization of profit through the selling price of the patented goods was a central part of the statutory reward to

the patentee, Chief Justice Taft answered the question for the Court as follows:

> "One of the valuable elements of the exclusive right of a patentee is to acquire profit by the price at which the article is sold. The higher the price, the greater the profit, unless it is prohibitory. When the patentee licenses another to make and vend and retains the right to continue to make and vend on his own account, the price at which his licensee will sell will necessarily affect the price at which he can sell his own patented goods. It would seem entirely reasonable that he should say to the licensee, 'Yes, you may make and sell articles under my patent but not so as to destroy the profit that I wish to obtain by making them and selling them myself.'"

Since the *General Electric* decision, this Court has made it clear that the privilege which it recognizes is one with sharp and strict limitations. Thus, the Court has underscored that a scheme involving the grant of multiple licenses may not be used to "regiment an entire industry by licenses containing price-fixing agreements." *United States* v. *United States Gypsum Co.*, 333 U. S. 364 (1948), 340 U. S. 76 (1950),[24] as summarized in *United States* v. *Paramount Pictures, Inc.*, 334 U. S. 131, 143 (1948); *United States* v. *New Wrinkle, Inc.*, 342 U. S. 371 (1952).[25] These holdings have, in fact, led one Court of Appeals to hold that any price-restrictive license which is adhered to by more than one licensee amounts to a *per se* violation

---

[24] In *Gypsum* the licensees urged the rest of the industry to accept similar price-restrictive licenses. 333 U. S., at 378-82.

[25] In *New Wrinkle*, twelve of the industry members subscribed to price-restrictive licenses issued by a patent "pool" corporation.

of the Sherman Act. *Newburgh Moire Co.* v. *Superior Moire Co.*, 237 F. 2d 283 (3d Cir. 1956).[26]

Various other decisions of the courts illustrate the strict limitations on the *General Electric* privilege. Thus, the price-restriction clause cannot be used in respect of cross-licensed patents, or of pooled patents. *United States* v. *Line Material Co.*, 333 U. S. 287 (1948); *United States* v. *New Wrinkle, Inc., supra.* And it has long been the rule that the price-restriction clause may not cover sales made by others than the licensee; for example, it may not be used as a basis for resale price maintenance. See, *e.g., Standard Sanitary Mfg. Co.* v. *United States*, 226 U. S. 20 (1912); *United States* v. *General Electric Co., supra,* at 485-90; *Ethyl Gasoline Corp.* v. *United States*, 309 U. S. 436 (1940).

Moreover, it has been made clear through a line of cases in the lower courts that the *General Electric* doctrine permits use of a price restriction only where the patent covers the end item itself which is to be subjected to the restriction, not in cases where, for example, the patent covers only the process of its manufacture. See, *e.g., Cummer-Graham Co.* v. *Straight Side Basket Corp.*, 142 F. 2d 646 (5th Cir. 1944), *cert. denied*, 323 U. S. 726 (1944); *Barber-*

---

[26] We must observe that the ruling in the *Newburgh* case was quite unnecessary to the result because the patentee there had, as the District Court's opinion makes clear, engaged in a practice which the cases denounce as an abuse of the *General Electric* privilege and hold to be unlawful. See *Newburgh Moire Co.* v. *Superior Moire Co.*, 105 F. Supp. 372, 374 (D. N. J. 1952). The patentee in the *Newburgh* case, as the cited passage indicates, undertook to restrict the prices of the unpatented finished items sold by its licensees under a process patent license. The law was quite settled by the time of the *Newburgh* case that this practice was not permissible. See pp. 26-27 and pp. 71-72, *infra.*

Colman Co. v. *National Tool Co.*, 136 F. 2d 339 (6th Cir. 1943). It is also held that the price-restriction privilege exists only where the patentee is himself manufacturing the patented item. *United States* v. *Vehicular Parking, Ltd.*, 54 F. Supp. 828, 838 (D. Del. 1944).

Furthermore, where such a price restriction of the sort permitted by *General Electric* is included in a patent license, it is held that—despite any stipulation to the contrary—the licensee may challenge the validity of the patent covered by the license, and if successful, avoid the agreement. *Sola Electric Co.* v. *Jefferson Electric Co.*, 317 U. S. 173 (1942). And it is always open to the United States, in an antitrust suit, to attack the validity of the patents involved. *United States* v. *United States Gypsum Co.*, 333 U. S. 364, 387-88 (1948).

This Court recently reaffirmed that: "The patent laws which give a 17-year monopoly on 'making, using, or selling the invention' are *in pari materia* with the antitrust laws and modify them *pro tanto*." *Simpson* v. *Union Oil Co.*, 377 U. S. 13, 24 (1964). Both these laws are economic devices, adopted by Congress to achieve certain economic goals. As the cases cited demonstrate, the balance between the antitrust laws and the patent laws represented by *General Electric* and subsequent cases is one which has been carefully and delicately struck. The Courts have been quick to invoke the Sherman Act to prevent any abuse of the limited privilege of the patent owner recognized by the *General Electric* case.[27]

---

[27] "Logical" arguments, derived from the nature of the patent monopoly or of the antitrust laws, have not been, of course, the determinants in striking this accommodation. (See our discussion below, pp. 55-62, as to the abstract arguments of the Government's brief.) As a distinguished commentator on the relationship between the patent laws and the antitrust laws recently said of the accom-

The present case, as even this limited record indicates, presents the very circumstance in which the *General Electric* privilege has its greatest practical justification: the case of the small inventor with a small, closely-held family corporation, who wishes to admit a second source to the practice of his invention while at the same time retaining some of the fruits of manufacture himself.—And it often is the case that manufacture of the invented device furnishes the inventor's primary reward. Edison declared that: "I have made money through the introduction and sale of my products as a manufacturer, not as an inventor." [28]

It may well be that the *General Electric* doctrine, with the necessary limits the cases have put on it, would today prove of little utility to modern industrial units of the size of the General Electric Company and of Westinghouse Electric Company. But it is hard to see how the continuation of the narrow privilege for a small inventor, not shown to be dominant in any field broader than that encompassed by the claims of his patent, and for his single second-source licensee, could seriously be thought to pose a threat to the preservation of competition; and in fact, to the ex-

---

modation between those laws that has been reached: "It is important to recognize this accommodation for what it is: a policy decision by the courts that here they stand, instead of permitting more or less. They could have contained the patent monopoly more narrowly. Or they could have extended the area of permissible restrictions. For instance, they could logically have permitted more extensive control over the unpatented products of patented processes or machines, tie-in arrangements, more extensive price restrictions, control over patented articles in the hands of successive purchasers, greater control over competition between multiple licensees, and so on." Stedman, "Legal Problems in the International and Domestic Licensing of Know-How," Address before Section Meeting of the American Bar Association, Miami, August 8, 1965, p. 4.

[28] Crawford, *Patents, Profits and Pirates; An Interview with Thomas A. Edison,* Saturday Evening Post, Sept. 27, 1930, p. 4.

tent it permits him to survive as a producer, it promotes competition.

Despite these factors, in the present case, for the first time in seventeen years, the United States has chosen to attack the continuing validity of the rule of the *General Electric* case, even in the carefully limited applications sanctioned by the decisions of this Court. For this case involves a single patent license grant—a "second-source" license—simply containing a first resale price-restrictive clause—the very sort of arrangement sanctioned by the Court in *General Electric.* As in *General Electric,* no challenge to the validity of the basic patents involved in the license here has been made by the Government.—The strength of these patents has been demonstrated by the fact that they were upheld in their only judicial test, that they have been the subject of numerous licensing requests by others than Townsend, and that apparently no one has risked infringement of the patents since the early 1950's.

What the Government is contending—as it must, since it has introduced no economic evidence to suggest or support an intermediate approach—is that not only should *General Electric* be overruled, but that the use of a single patent license with a price-restrictive clause, sanctioned by *General Electric,* should be henceforth held to be a *per se* violation of the Sherman Act. Overruling the *General Electric* case and imposing a *per se* rule here would destroy the accommodation that has been built, through a course of decisions over a period of almost forty years, between the lawful statutory monopoly of the patent owner and the general commands of the antitrust laws. We submit that on the present record there is no basis for the Court to determine that a *per se* rule should be imposed here—for considerations of administrative convenience or other-

wise—in place of the continuation of the case-by-case approach, by which the courts determine whether the patent owner has overstepped the statutory privileges bestowed upon him under the patent laws.

I. THIS CASE IS PROCEDURALLY INAPPROPRIATE FOR A RECONSIDERATION OF THE *GENERAL ELECTRIC* RULE

It would be hard to devise a more inappropriate case than this one for this Court to consider the overruling of the *General Electric* case. The present case is the civil side of simultaneous criminal and civil proceedings brought by the Justice Department after repeated complaints by the disgruntled stepson of the founder of Huck Manufacturing Company who left Huck in 1956 and became President of another concern. The two cases were tried before different judges and each resulted in a dismissal of the charges at the close of the Government's case. In neither the civil nor the criminal proceedings did the Government indicate that it was questioning the *General Electric* doctrine and bringing a case to form the basis for the overruling of that doctrine in the appropriate forum. In fact, the Government affirmatively, after due study of the matter, reported to the court and the parties that *General Electric* was "good law" and that it was not attempting to have it overruled; thereby the Government foreclosed the development of a record on which an intelligent determination could be made as to whether there should be an overruling. Contrast *United States* v. *Line Material Co.*, 333 U. S. 287 (1948).[29]

[29] In the *Line Material* case, the Government made plain its view in the District Court that *General Electric* was not good law and had been erroneously decided. On the basis of this, the District Court was able to analyze the record and make findings of a nature which would have been of relevance had the Supreme Court determined to overrule *General Electric*. See 64 F. Supp. 970, 976, 977 (E. D. Wis. 1946).

In detail, the procedural deficiencies in the present case, considered as a vehicle for this Court's consideration of whether the rule of the *General Electric* case remains a sound accommodation of the antitrust laws and the patent laws, are the following:

1. *The Government's Waiver.*—The Government, in the trial of the civil case, expressly and repeatedly waived any intention to question the *General Electric* rule. This waiver took the form of express statements on the record at pretrial conferences, which were embodied in a Pretrial Order (R. 767-68); it was confirmed by repeated statements by the Government that the issue in the case was whether the facts fell outside the rule of the *General Electric* decision. These statements, which did not in any fashion reveal any intent to question the rule of the *General Electric* case, were contained in a letter to the court by the then Assistant Attorney General outlining the Government's position (R. 779-81), in the Government's brief on the appellees' motion for judgment under Rule 41(b) (Gov't Tr. Br., p. 50), and in oral argument on that motion. (R. 697-99)

It was on the basis of this express waiver that the issues were formulated at pretrial, and on this basis that the parties agreed at the instance of the Government that the record of the evidence at the criminal trial, which had been first held, would be received in evidence as the Government's whole case in chief in the civil trial. It was in the light of this waiver that the defense moved for judgment under Rule 41 at the close of the Government's case.

Under the Federal Rules of Civil Procedure, the issues formulated in the pretrial orders govern the entire subsequent course of the action.[30] In the light of the issues

[30] Rule 16 provides that a pretrial order: "when entered controls the subsequent course of the action, unless modified at the trial to

formulated below, to permit the Government to inject at this stage the issue of overruling the *General Electric* case would be to eviscerate the careful pretrial procedures followed in the court below. If the appellees were not justified in relying here on the express waiver by the Government of any intent to question *General Electric,* it is hard to conceive that any party may ever safely rely on any pretrial order.

The Government's waiver of any intent to question the *General Electric* case was just that. It did not amount, in form or substance, simply to a bit of gratuitous advice to the District Judge that he could not himself overrule Supreme Court decisions. It was, rather, a notice served on the lower court and on the defense that the issues in the case were to be framed, and the record shaped, on the assumption that the *General Electric* case was good law and was not going to be challenged. Numerous appellate cases—including decisions of this Court—hold such a waiver conclusive against injection of the waived issue on appeal,[31] and application of their principle is very much warranted in this case.

---

prevent manifest injustice." The cases consistently follow the clear intent of this rule. See, *e.g., United States* v. *Fallbrook Public Utilities District,* 165 F. Supp. 806 (S. D. Cal. 1958); *United States* v. *Shubert,* 15 F. R. Serv. 33.333, Case 1 (S. D. N. Y. 1951); *United States* v. *E. I. du Pont de Nemours & Co.,* 11 F. R. D. 308 (D. Del. 1951); *Sinclair Refining Co.* v. *Howell,* 222 F. 2d 637 (5th Cir. 1955); *Fowler* v. *Crown-Zellerbach Corp.,* 163 F. 2d 773 (9th Cir. 1947).

[31] See, *e.g., Giordenello* v. *United States,* 357 U. S. 480, 488 (1958); *Helvering* v. *Cement Investors, Inc.,* 316 U. S. 527, 535 (1942); *Virginian R. Co.* v. *Mullens,* 271 U. S. 220, 227 (1926); *Duignen* v. *United States,* 274 U. S. 195, 200 (1927). We would point out that in the first two cases cited, failure to raise the issue below was held conclusive against the Government; and that in none of the cases cited, and rarely in any of the cases, is there found a waiver as express and explicit as that involved here.

2. *Conduct of the Case on the Basis of the Waiver.*—The appellees then conducted their defense in reliance upon this framing of the issues in which the Government had waived any attempt to lay the foundation for an attack on *General Electric.* The defense agreed to the Government's request that there be received in evidence as the Government's proof in the civil case the transcript of the Government's case-in-chief in the criminal prosecution.

It is undisputed that the Government did not seek the overruling of the *General Electric* case in the criminal proceeding. In fact, it scarcely could have if it had wanted to; criminal pains and penalties could hardly have been called down upon conduct which was within the scope of behavior held lawful by an existing Supreme Court decision. The record of the criminal case, then, which constitutes the entire evidentiary record of this case, is completely void of the sort of material which could lead to an informed decision on the question whether the *General Electric* case should be overruled. The direct evidence of the Government was not pointed at this issue; and neither was the cross-examination by the appellees, or the exhibits they introduced.

Consistent with the Government's waiver of any intent to question *General Electric,* the introduction of economic evidence had been resolutely objected to by the Government in connection with the criminal trial.[32] (R. 366) Of

[32] In granting the motions for judgment of acquittal in the criminal case Judge Kaess stated that: "[The Government] has indicated that it does not consider the problem of defining the relevant market to be part of its case, or even part of the defendants' case. . . . Indeed, if the Court understands the Government's position correctly, it would foreclose the defendants from attempting any proof that the arrangement was justified on economic grounds While the Government has shown that the sale of the product forms some appreciable part of interstate commerce, it has declined to inform the court and the jury what positions are held by the defendants in their industry." 214 F. Supp., at 777-78.

course, the Government itself presented no evidence on economic issues in the criminal trial. There was not even any attempt to define a relevant market, with the result that the civil court's dismissal of the Government's Section 2 charges has not even been questioned on this appeal. Evidence of the "economic and business stuff out of which these arrangements emerge"—and of the alternatives to them[33]—is essential to the resolution of the question whether the single "second-source" price-restrictive patent license—sanctioned in *General Electric*—should now be held a *per se* violation of the Sherman Act. *White Motor Co. v. United States*, 372 U. S. 253, 263 (1963).[34] Without this sort of record, there is no basis on which the Court could conclude that the "second source" license should be a new *per se* violation of the Act.

Not only is the record devoid of economic evidence or other evidentiary materials on which to reach an informed judgment as to whether the *General Electric* decision should be overruled, but the Government's waiver of any intent to challenge *General Electric* led the defense

---

[33] The Government contended that "any evidence introduced in order to delineate a 'relevant product market' in this case or evidence tending to show that there are products which may substitute for lockbolts or which are interchangeable with them is irrelevant, hence inadmissible." (Gov't memo of law, Feb. 21, 1963, pp. 1-2)

[34] In *White Motor*, the Court said as to the particular practice there claimed by the Government to be a new *per se* violation: "We do not know enough of the economic and business stuff out of which these arrangements emerge to be certain. They may be too dangerous to sanction or they may be allowable protections against aggressive competitors or the only practicable means a smaller company has for breaking into or staying in business . . . and within the 'rule of reason.' We need to know more than we do about the actual impact of these arrangements on competition to decide whether they have such a 'pernicious effect on competition and lack . . . any redeeming virtues' [citing *Northern Pac. R. Co. v. United States*, 356 U. S. 1, 5 (1958)] and therefore should be classified as *per se* violations of the Sherman Act." 372 U. S., at 263.

into a material concession as to the proof of the basic historical facts as to what had happened between Huck and Townsend. Since the Government was not reserving the right to seek an overruling of *General Electric,* it made little difference whether or not the trial judge in the civil case had the opportunity to observe the witness Looker on the stand. Whether he was believed or not by the trial judge in his story that the parties had agreed to provide price restriction and exclusivity features for a period beyond September 1956 was immaterial because, in any event, that conduct did not violate the law as expressed in *General Electric.* Had the defense any notice that any material consequences turned on whether Looker's story was believed or not, it scarcely would have stipulated that the record of the criminal proceeding be received in evidence in the District Court, thereby depriving Judge Machrowicz of the opportunity to observe Looker on the stand.[35]

3. *Only Half a Case.*—The two cases were each tried solely on the basis that the defendants' conduct went beyond the scope of the conduct permitted by the *General Electric* doctrine.[36] In each case there was an abject failure

---

[35] The Government suggests that Judge Kaess who sat in the criminal trial found that Looker's testimony was credible. It infers this from Judge Kaess' recital that the oral agreement was proved "prima facie." (214 F. Supp., at 777; Gov't Br., p. 8, n. 5) But the Government's brief neglects to inform the Court of the fact that Judge Kaess was sitting with a jury. (R. 18) Obviously, on a motion for acquittal addressed to him at the conclusion of the Government's case he could not resolve any issue of credibility, as that was for the jury. He had to accept Looker's testimony as true, and even on that basis granted the motion for acquittal. That is all that the language in question in his opinion means or could mean.

[36] The Government contended in the civil case that the case went outside the *General Electric* rule (1) because of the exclusive fea-

of proof of any such conduct. As a result of this, in neither case was the defendants' evidence put in the record. Since *General Electric* was not in issue, the defense moved for judgment in each case at the close of the Government's case, and of course in the light of the issues framed the motions were granted.

This circumstance itself is a powerful reason why the Court should not accept the Government's invitation to make this case an occasion for considering the overruling of the *General Electric* rule. Such an occasion would certainly be better presented by a case in which both sides had put in their proof (let alone one in which the *General Electric* rule has been put in issue), rather than one in which the Court would be called upon to decide the questions presented on the basis of only one party's record, and where the findings of the District Court are simply findings as to whether the Government's case, taken by itself, established certain facts by a preponderance of the evidence.[37] *Cf. White Motor Co.* v. *United States, supra.*

---

ture in the written license and the alleged oral agreement; (2) because of certain alleged participation by Townsend in fixing prices under the license; and (3) because of the provision for cross-licensing of Townsend's improvements contained in the licenses. (Gov't Trial Br., pp. 50-51) As we shall develop, the exclusive feature is irrelevant to the matter, and in fact provides an assurance that the limitations on the *General Electric* rule will not be transgressed. The Government's points as to delegation of power to fix prices and as to the significance of the cross-licensing are not being pursued in this Court.

[37] In fact, as to the evidence of Looker as to the oral agreement—essential to the Government's case—the District Court did not even make any finding other than that Looker had testified to the agreement. (Fdg. 15, R. 709) This was because under the *General Electric* doctrine the duration of the price-restriction clause was not material.

4. *Abuse of the Expediting Act.*—In *United States* v. *Singer Manufacturing Co.*, 374 U. S. 174, 175 (1963), this Court declared that the provisions of the Expediting Act providing for direct appeals from the district courts in Government civil antitrust cases were unsatisfactory, not only from the standpoint of the burden on this Court, but because they deprive the Court of the record-sifting functions of the Courts of Appeals. Here the Government is compounding the burdens of the Expediting Act by asking this Court to consider the overruling of the *General Electric* case not only in a case where there is no opinion of a Court of Appeals, but where there is no record in or opinion of the District Court addressed to the issue, and where there is not even any case on behalf of the defense or any findings of the District Court made after the consideration of all the evidence.

Of course, the Court must continue to hear appeals under the Expediting Act unless and until it is repealed and accordingly has noted probable jurisdiction here. But of a certainty it has a discretion to determine which records brought directly to it from the district courts under the Act are suitable vehicles for the reconsideration of its established precedents involving important legal issues. This is particularly the case where that reconsideration is dependent upon the Court's taking the extraordinary step of relieving the Government from the usual consequences of the repeated express waiver which it made below. There are problems enough in the Expediting Act without its being used as a vehicle to enlarge the original jurisdiction of this Court.

5. *Incipient Mootness.*—Moreover—even apart from the unfairness of such a course—there would be scant point in this case even for a remand to the District Court to permit

the Government to put in proof relevant to the validity of *General Electric* and to permit appellees to withdraw their acquiescence in the stipulation and to put in their defense, in order to make a complete record.

This is because the case is in a state of at least incipient mootness in terms of its ever being a suitable case for reconsideration of the *General Electric* doctrine. The basic patents owned by Huck, which form the basis for the license to Townsend with the price-restriction clause now attacked by the Government, will expire in November, 1967.[38] It is highly doubtful whether, if a remand were made, there could be conducted the necessary discovery incident to putting in the defense (as well as the Government's proofs) on the broader issues now raised by the Government, the retrial in the District Court could be completed, and the appeal to this Court could be reperfected and argued, before the patents expire. As this Court has frequently stressed, while it "decides questions of public importance, it decides them in the context of meaningful litigation." *The Monrosa v. Carbon Black Export, Inc.*, 359 U. S. 180, 184 (1959).

While the basic second-source license in question also covers certain patents on improvements and lockbolt equipment made by Huck, it is purely conjectural to assume that industry conditions in the manufacture of lockbolts would not be materially changed when the basic patents on them expire.—Obviously, it is much easier to design around improvement patents and produce a noninfringing device once the basic patent in a field of art falls into the public domain. The market structure of the sale of lockbolts thus may well be dramatically changed once the basic Huck patents expire.

---

[38] The basic patents are Nos. 2,531,048 and 2,531,049, both granted November 21, 1950. (R. 469)

Accordingly, proofs taken upon any remand will almost certainly be out of date before any further appeal is considered by the Court. Since this case would either become moot or drastically changed at the expiration of the basic patents in 1967, it is clear that for this reason again it furnishes an inappropriate vehicle for the reexamination of the *General Electric* doctrine. Accordingly the Government should be held to its waiver and the judgment below should be affirmed without reexamination of that doctrine.

6. *Likelihood of a Purely Advisory Opinion.*—Finally, not only is the case in a state of at least incipient mootness because the basic patents involved will soon expire, but the case—unless the alleged oral agreement testified to by Looker is credited—involves a restriction which has long since expired. The terms of the license (GX 17, R. 472) provided that the license would be exclusive, and Huck's prices maintained by Townsend, only until September, 1956. Unless Looker's testimony is believed, the case involves a practice which was discontinued nine years ago and which would not, even if *General Electric* were overruled, be an appropriate object of injunctive relief.—The District Court did not make any finding that there was any oral agreement to continue the exclusive feature and the price-restriction features of the license after the expiration of the two-year period provided for them in the written agreement.

Accordingly, even if *General Electric* were to be overruled, the grant of an injunction in this case would depend upon the resolution of this factual issue, after the appellees put in their case upon a remand in the court below. On any such remand, the appellees might well withdraw from the stipulation and request that the Government be required to put on its proofs in open court. The District Court might well find on the basis of a full record that no such agreement as that to which Looker testified existed.

Certainly this circumstanee adds to the abstractness of the very serious question which the Government is attempting to introduce into the appellate stage of this case, and furnishes a further reason why this Court should not take the extraordinary step of permitting the Government to raise the question of the validity of *General Electric* for the first time on appeal. In the absence of a finding that Looker's story was true, this Court is being called upon to render what is essentially an advisory opinion.

II. THE RECORD OF THIS CASE CANNOT SUPPORT AN INFORMED JUDGMENT THAT *GENERAL ELECTRIC* SHOULD BE OVERRULED

These manifold procedural failings in this case—from the standpoint of its being a vehicle for the reconsideration of *General Electric*—have led, as naturally they must, to severe substantive gaps in the record which confirm the inappropriateness of this case as such a vehicle.

A. The Record does not Afford a Basis for Resolution of the Issues which must be Resolved Before a Decision to Overrule *General Electric* Could be Made.

The issue whether the *General Electric* decision should be overruled is not, as the Government would appear to believe by tendering it to the Court on this record, a law school examination question to be answered on the basis of a purely speculative analysis. Rather it is an economic question of the greatest seriousness. We question—in terms of the appropriateness of this case serving as a basis for the reexamination of the *General Electric* case—whether the fastener industry could present an adequate case study of the various economic issues involved. But,

in any event, except for that fortuitously put in, directed at other issues, the record is totally devoid of proof—either in terms of the lockbolt and metal fastener industry or of the economy generally—on the following questions, resolution of which would be essential to any informed decision as to whether the *General Electric* case should be overruled:

(1) *Public advantages in the existence of a second source.—What are the public advantages of having a licensed second source for a patented item, albeit subject to a price restriction, and to what extent would patentees choose not to license at all rather than to license other than on a price-restricted basis?*—Apart from the clear proof of Huck's manifest reluctance to license Townsend other than on a price-restricted basis, the present record offers no indication as to what the incidence of patentees choosing not to license at all would be if the *General Electric* case were overruled. The effects on the economy of not having a second source for patented items in these situations may well be significant. While by definition not offering price competition, second sources under a *General Electric* license offer increased production capacity, a broader procurement base for essential Government contracts,[39] and protection to the public against the effects of work stoppages on a single source caused by labor problems, natural disasters and the like.[40]

It must be remembered that the industry in which the lockbolt finds its greatest market is the manufacture of

---

[39] Here the Government desired a second source for lockbolts; and if one was not licensed it could procure from an infringer and remit Huck to its remedies under §1498 of the Judicial Code. (R. 516)

[40] Fearing this, and desiring prompter delivery, Huck's large commercial customers pressured it to establish a second source. (R. 56, 58, 293)

aircraft. To the extent that other forms of fasteners might not be suitable in these applications—a question on which, again, the record is incomplete[41]—the importance of having a "second source" for these items is underscored by the present record; for the production of aircraft has been an activity essential to the national defense, and the commercial production of airframes is a major domestic industry with a very broad and important export trade.

Therefore, in this context, it appears that: "Licensing assures that companies which may be better equipped than the patentee to serve a market will have an opportunity to do so. It also readies a number of additional sources of supply for the period after the patent expires or in event of emergency. Thus, licensing may serve to encourage maximum volume and to dilute monopoly control." Harris & Siegel, *Evolving Court Opinion on Patent Licensing,* 5 Patent, Trademark and Copyright J. 103, 110-11 (1961).

Thus, it appears a very realistic position that prohibition of the *General Electric* "second source" price-restrictive license might well intensify the monopoly inherent in the patent laws, rather than alleviate it, by discouraging the creation of "second sources."

Moreover, a price-restricted second source may provide competition to the patent owner in speed of delivery, or in service; or it might compete in developing complementary products to the patented device or in innovating

---

[41] The complaint (Paras. 8, 9, 10, R. 3) charged that there was a superiority inherent in lockbolts that in many cases precluded competition from other fasteners; but no evidence was tendered on these points and, despite its complaint, the Government insisted at trial that evidence as to substitutes was irrelevant. (R. 366) See also n. 33, p. 34, *supra.*

improvements in the patented device.[42] See Kareken, *Antitrust and the Exploitation of Patents,* 8 Patent, Trademark & Copyright J. 107, 109 (1964). There is obviously some public benefit to be obtained from all these competitive functions of the second source. *Cf.* McCarthy, *A Patent Licensing Policy for Minimizing Antitrust and Misuse Risks,* 46 J. P. O. S. 547, 550 (1964); Note, 55 Mich. L. Rev. 726, 727 (1957).

Furthermore, the grant of a "second source" patent license lays the foundation for vigorous competition in all respects—including price—at the expiration of the patent, by assuring that the patentee will not be alone in having a highly developed technology and established production and distribution facilities for the patented product. To the extent that the rule of the *General Electric* case encourages "second source" licensing, it helps further the purpose of the antitrust laws by preventing the patent monopoly from being used to achieve a monopolistic position in the industry for the patentee after the patent grant expires.[43] *Cf. Brulotte* v. *Thys Co.,* 379 U. S. 29 (1964). See Note, *Patent Price Restrictions and the*

---

[42] Here one of the reasons which motivated Huck to license Townsend was its desire to have a secondary source available to develop lockbolt installing tools and to expand their production. (R. 504)

[43] Thus, in the present case, even if the testimony of Looker is believed, there will soon be a situation in which, at the expiry of the basic patents, both Huck and Townsend will be established firms in the lockbolt industry and in a position to compete with each other in all respects, including price. Had Huck not licensed its patents it might well have been that at the expiry of the basic patent it would have been so far ahead in this field as to have a continuing monopoly position for years after the patents expired.

Antitrust Laws: A Balance Upset, 67 Yale L. J. 700, 711-12 (1958); Gibbons, *Price Fixing in Patent Licenses and the Antitrust Laws*, 51 Va. L. Rev. 273, 277-78 (1965).[44] This is certainly an important competitive consideration. Some commentators view the ability of the patentee to dominate the market after expiration of his patent to be, in antitrust terms, "the most important kind of interaction between patents and more generally based market power." Kaysen & Turner, *Antitrust Policy* (1959), pp. 166-67. See *United States* v. *Aluminum Co. of America*, 148 F. 2d 416, 422, 430-31 (2d Cir. 1945) (Alcoa's monopoly stemmed from a patent which expired in 1909).

The record is, because of the Government's waiver below, barren of evidence on which the advantages to the public in terms of competition from having a second source can be evaluated, or as to the extent to which they would be lost if patentees were forced to the decision whether to license without a price restriction or not to license at all.

Moreover, the record is equally deficient in failing to provide a full development of the extent to which, in an economy characterized by the presence of large buyers—like the members of the automotive and airframe industries—"second sources" for component items are demanded by these giant customers. Such an inquiry might well indicate that the availability of price-restrictive "second source" patent licensing is an essential device to maintain some semblance of bargaining equality between the small component supplier who has introduced a patented product and his customers.—But as to this point too, except for the evidence of the demands of Douglas Aircraft Company (R. 56, 58, 293), the present record is silent.

---

[44] While Professor Gibbons opposes the *General Electric* rule, he recognizes this justification for it.

(2) *Possibility of resort to other forms of licensing.—To what extent would overruling General Electric cause an increase in forms of licenses which, while perhaps unexceptionable from an antitrust standpoint, would have unfortunate economic consequences?*—Obviously the resolution of this question is an important consideration in passing on the continued validity of *General Electric*, but the present record offers no basis for an intelligent decision on it. For example, the extent to which royalties would be consequently increased in amount—thereby tending to create the same sort of price rigidity against which the Government presumably is contending—is incapable of resolution on the present record.

Furthermore, an overruling of the *General Electric* case might well cause even those patentees who desire a second manufacturing source not to grant an unrestricted license on a royalty basis to the second source to "manufacture," "use," and "sell" the patented devices, but only a license to "manufacture" them—the courts having uniformly held that patent licenses may be granted in respect of any of the three branches of the patent grant.[45] Thus, second sources might well be reduced, by an overruling of the *General Electric* case, from the status of independent marketers, having their own distribution systems and customer contacts with respect to sale of the patented items—albeit subject to the price restriction—to the status of the owners of contract production plants, whose output is taken up under contract and sold by the patentee.[46]—The present record offers no basis on which the Court could make an intel-

---

[45] See, *e.g.*, *Adams* v. *Burks*, 17 Wall. 453, 456 (1873); *Simpson* v. *Union Oil Co.*, 377 U. S. 13, 24 (1964).

[46] Even on the present record, it is suggested that certain of the patented lockbolts (in large sizes) were fabricated by Republic Steel Corporation on a "subcontract" basis for Huck. (R. 104-05)

ligent judgment of the feasibility of this possible approach by patentees if *General Electric* is overruled, or of its consequences.

(3) *Interproduct competition and industry-wide licensing.—To what extent, if the single "second source" license with a price-restrictive clause involved here were outlawed, would patentees instead engage in industry-wide patent licensing on a royalty basis, and to what extent would this have anticompetitive consequences?*—While the Government denounces the exclusive feature of the license involved here, an industry-wide license on a royalty basis even without a price restriction might remove all incentive to develop new forms of fasteners which might be superior to the lockbolts in question here.

Certainly, outlawing of the "second source" price-restrictive license involved here is apt—as the Government admits, and in fact presents as a desirable alternative (Gov't Br., pp. 24-25; J. S., pp. 14-15)—to lead to widespread licensing on a simple royalty basis. Of course, in this situation the patentee would be encouraged to maximize his royalties through industry-wide licensing. But the conclusion is far from clear—and the present record offers no clue to solution of the question—that such a result would tend to stimulate rather than suppress competition.[47] For a licensee who has accepted a license for a patented product may well, because of his investment in special facilities and tooling, as well as in advertising

[47] Indeed, even an opponent of the *General Electric* rule has observed: "Most advocates of the abolition of price restrictions assume that the restraints prevent licensees from competing. The importance of this factor must be depreciated. . . . While courts may remove the shackles of price control, as a practical matter, the licensees of a valuable patent may still be in economic bondage." Gibbons, *Price Fixing in Patent Licenses and the Antitrust Laws*, 51 Va. L. Rev. 273, 288 (1965).

and other "consumer acceptance" methods specifically pointed to the licensed product—in short, his commitment to that product—be inhibited from endeavoring to find substitutes. Certain lawful methods of computing royalties may have the same effect. See *Automatic Radio Mfg. Co.* v. *Hazeltine Research, Inc.*, 339 U. S. 827 (1950).

A distinguished economist has contended that: "[I]n capitalist reality as distinguished from its textbook picture, it is not . . . [price] competition which counts but the competition from the new commodity, the new technology, the new source of supply, the new type of organization (the largest-scale unit of control for instance)—competition which commands a decisive cost or quality advantage and which strikes not at the margins of the profits and the outputs of the existing firms but at their foundations and their very lives. . . ." Schumpeter, *Capitalism, Socialism and Democracy* (3d ed. 1950), p. 84.[48] It may well be that with all comers comfortably licensed to produce the patented product at a royalty, although without a price restriction, the incentive for innovation would be stifled. For it is not from the established producer that innovation and change is apt to come: "It cannot be only chance that the Western Union interests underestimated the telephone, that the Telephone Company was slow to appreciate the possibilities of radio, that it remained for newcomers to bring out the inexpensive table model radio receiver . . . and that one small concern made the first F.M. transmitters while a local network was the first commercial enterprise to install them." Kottke, *Electrical Technology and the Public Interest* (1944), p. 127. "The British and American

[48] Thus, "in some fields the invention disclosed by the average patent is obsolete long before the seventeen-year expiration date." Gibbons, *Price Fixing in Patent Licenses and the Antitrust Laws*, 51 Va. L. Rev. 273, 286 (1965).

chemical firms took no part in the crucial discoveries connected with penicillin, and it was difficult enough to persuade them to take part at the pilot plant stage even when the chemo-therapeutic virtues of penicillin had been placed beyond doubt. . . . The Kroll system of producing ductile titanium was strangely neglected by the metallurgical and chemical corporations. When Baird called on the Marconi Company in 1925, he was told that they had no interest whatever in television." Jewkes, Sawers & Stillerman, *The Sources of Invention* (1958), pp. 189-90.

Thus, as the sources we have quoted suggest, a system which encourages the patentee to seek his reward through industry-wide licensing on a simple royalty basis may well have adverse consequences on the competition that under the present system comes from new products.—Once again, it is not an abstract point of legal doctrine which is before the Court here, but an issue of important economic consequences, and one to which the record before the Court is not in any way directed.

(4) *The second-source license and prevention of monopoly.—To what extent is the General Electric "second source" license with its price-restrictive technique used by the smaller concerns, and what would be the consequences in terms of the promotion of economic concentration if the technique were to be outlawed?*—Again, the record does not furnish a basis for an informed judgment except that it is obvious on the present record that Huck is a small business enterprise which has survived in an era of industrial concentration. It has, of course, been pointed out that "The right [of granting a second source license with a price-restrictive clause] is of special importance to small producers who might otherwise have to choose between being the sole manufacturer, in which case output would be small,

or licensing without price restrictions to titans able to undersell them." Note, *Price Fixing Through Patent Licensing*, 61 Harv. L. Rev. 1427, 1428 (1948). See Dominick, *Recent Developments in the Law of Price Restrictions in Patent License Agreements*, 11 Geo. Wash. L. Rev. 302, n. 4 (1943); Barnard & Zlinkoff, *Patents, Procedure and the Sherman Act*, 17 Geo. Wash. L. Rev. 1, 41 (1948).[49] Thus, in this context, it may well be that such licenses are "the only practicable means a smaller company has for breaking into or staying in business." *White Motor Co.* v. *United States, supra*, at 263; see also *id.*, at 269 (concurring opinion).

Indeed, the ability to increase output through a "second source" license with a price-restrictive clause may be an important factor leading smaller concerns into the field of research and development in the first place. Obviously, it is important to the national economy not to inhibit research and development work by those companies; but without the prospects of the rewards of profitable manufacture, these companies will not undertake research and development. In today's economy, where marketing techniques are so important, a small concern may well founder when it attempts to bring the product it has developed to market. It is in this stage that a "second source" price restrictive license would be most useful to a new company.

The inventor of the "Polaroid" camera—the basis of one of the most remarkable stories in recent commercial history

[49] Thus, the ability to grant a second source license on a price-restricted basis assures the small manufacturing patentee that he will not be squeezed out of the market. "It seems undeniable that the mere receipt of royalties, however satisfactory, can hardly ever be equivalent economically to the actual sale by the patentee of his own product, with all that such sale means in terms of good will, and continued successful operation of the patentee's manufacturing enterprise." Note, 2 Rutgers L. Rev. 254, 260-61 (1948).

of the entry and growth of a small firm in a market previously inhabited by giants—has written: "It is impossible for a new company involving a major advance in science or technology . . . to go through the extremely difficult periods of study; invention, development, engineering, and production . . . [and] to afford to advertise and to afford to distribute—without protection by patents." Land, *The Role of Patents in the Growth of New Companies*, 41 J. P. O. S. 502, 506 (1959). It is apparent that it is just to this sort of company that the ability to grant a second source license of the sort sanctioned in *General Electric*—possibly at a time when satisfaction of a budding public demand for its product would cause it to become established—would be most meaningful. "A new commodity may have to be put on the market on a minimum scale if it is to make an appropriate impact." Jewkes, Sawers & Stillerman, *The Sources of Invention* (1958), p. 206.

While the majority of patents are apparently owned by large corporations, it does not seem to be the case that the majority of really basic inventions are made by the research departments of large corporations. A recent study analyzes sixty-one of the most basic inventions of recent history, providing "a representative cross-section" of recent technical progress, and concludes that thirty-eight of them were the product of individual inventors or inventors associated with small companies, as was Mr. Louis Huck here. Jewkes, Sawers & Stillerman, *The Sources of Invention* (1958), pp. 75, 78-79; 263-410.[50] Certainly it would be in

[50] The thirty-eight inventions attributed to individual inventors or those associated with small companies: Air Conditioning; Automatic Transmissions; Bakelite; Ballpoint Pens; Catalytic Cracking; Cellophane; Cellophane Tape; Chromium Plating; Cinerama; Continuous Hot Strip Rolling of Steel; Cotton Picking Machines; Crease-Resisting Fabrics; Cyclotrons; DDT; Domestic Gas Re-

the interests of avoiding economic concentration—one of the basic purposes of the antitrust laws—to encourage production under these inventions by inventor-formed corporations and other small firms. Thus, any rule that would primarily affect the desirability of the patent rights of the inventor-formed corporation, or those of other smaller producers—as would the abolition of the *General Electric* rule—should require justification of a most positive sort. The present record certainly does not provide that justification.

(5) *The economic consequences of substituting assignment for "second source" licensing.—To what extent would sale or assignment of patents—again put forward by the Government as a desirable alternative to "second source" licensing with a price-restrictive feature—tend to suppress competition?*—Such sales or assignments may result in

---

frigeration; Electric Precipitation of pollutants from industrial fumes; Electron Microscopes; Gyro-Compasses; Hardening of Liquid Fats; Helicopters; Insulin; Jet Engines; "Kodachrome"; Magnetic Voice Recording; Neoprene; Penicillin; "Polaroid" Land Camera; Power Steering; Quick Freezing; Radio; Safety Razors; Self-winding Wrist Watch; Streptomycin; "Sulzer" Looming; Synthetic Light Polarization; Titanium (development of use in pure form); Xerography; and Zippers. Jewkes, Sawers & Stillerman, *supra*, at 82, 87. For two other inventions, individual inventors contributed very basic ideas but extensive and early development was carried on by large companies: Silicones and Synthetic Detergents. *Id.*, at 368-69; 380. Besides these, only the following were created, according to the authors' account, in the laboratories of large firms: Acrylic Fibres; Diesel-Electric Railway Locomotives; Duco Lacquers; Fluorescent Lighting; Freon Refrigeration; Krilium; Long-Playing Records; Methyl Methacrylate Polymers ("Plexiglas"); Modern Artificial Lighting; Nylon; Polyethylene; Television; "Terylene" Polyester Fiber; Tetraethyl Lead; and Transistors. *Id.*, at 85-87.

The hearings of the U. S. Temporary National Economic Committee contain statements by eminent scientists corroborating this phenomenon of individual and small-firm invention as to the really basic, important inventions. Hearings, Part III, pp. 871-72 (Vannevar Bush); pp. 971-76 (Frank B. Jewett); p. 988 (Philo T. Farnsworth) (1939).

the patentee leaving the manufacturing field altogether. It may well be that the patent is likely to go to a company already in the field, with the result being to make that company dominant if it is not so already. Companies which already possess large numbers of patents are the likeliest customers for patents sold by others.[51] In these situations, there is always the danger that for one reason or another the assignee of the patent may not engage in production under it, thereby depriving the public of the benefits of the invention and the assignor—unless his assignment was for a lump-sum consideration—of the rewards of his royalty. See Wood & Johnson, *Patents and the Antitrust Laws*, 1950 U. Ill. L. Forum 544, 571-72.

It is, accordingly, rather odd for the Government to support the overruling of the *General Electric* rule, without proof that there will not be a substantially increased tendency on the part of patentees to sell their patents or to license them to large corporations and abandon manufacture themselves.[52] In the past, the assignment of patents

---

[51] See the study, based on questionnaires, appearing in Note, *Patent Use Restrictions*, 75 Harv. L. Rev. 602, 619 (1962). As Study No. 26 of the Subcommittee on Patents, Trademarks and Copyrights, Senate Judiciary Committee, "The Patent System: Its Economic and Social Basis," 86th Cong., 2d Sess. (1960), p. 18, states: "Firms with established research, manufacturing and marketing facilities are likely to be favored in the acquisition of new inventions . . . . " See also the statistics on patent holdings of large corporations in Appendix I, Study No. 3 of Subcommittee on Patents, Trademarks and Copyrights, Senate Judiciary Committee, 84th Cong., 2d Sess. (1956).

[52] To be sure, many small inventors cannot engage in the manufacture of their own invention for a variety of reasons. One common one is that the invention may be an improvement in a field of manufacture which is already dominated by large concerns and which it is impossible for the inventor to enter with his own company. Thus, the inventor of power steering, an individual, obtained his basic patents in 1931-33. He licensed General Motors but no real use was made of the invention until after the basic patents expired.

by individual inventors and small patent-owning companies to dominant firms has repeatedly led to situations in which antitrust suits have finally been brought by the Government. See *United States* v. *E. I. duPont de Nemours & Co.*, 351 U. S. 377 (1956) (Cellophane); *United States* v. *Eastman Kodak Co.*, CCH 1954 Trade Cas. para. 67,920 (W. D. N. Y. 1954) ("Kodachrome" color film); Jewkes, Sawers & Stillerman, *supra*, pp. 272-74 (sale of Cellophane patent rights by inventor to duPont); *Id.*, at 321-23 (acquisition of Kodachrome invention by Eastman Kodak Company). Yet the Government has explicitly claimed the sale of patents to be preferable to their licensing on a *General Electric* "second source" basis. (J. S., p. 14)

While experience of this nature suggests that a rule which encourages the sale, rather than the practice of patent rights, as the overruling of *General Electric* admittedly would do, would be ill-advised, the present record does not afford an exhaustive answer to the question. However, it is not uninstructive to speculate on the situation which might have ensued had Huck sold its patent to one of the major steel companies desiring to engage in vertical expansion—say to Republic Steel Corporation which was interested in making lockbolts and asked for a license. (R. 104-05) Under those circumstances, the presence of Huck and Townsend in the production of lockbolts would surely have ended.

Jewkes, Sawers & Stillerman, *supra*, p. 344. Of course, a variety of other reasons, such as personal desire to avoid the business complexities of production or lack of business ability, may result in the transfer of patents to large corporations. But particularly since there are such factors pointing toward economic concentration, the abandonment of any rule which makes it easier for the small patent-owning firm to survive, as does the *General Electric* rule, should not be undertaken without a thorough factual justification.

(6) *Inefficiencies in a patentee's sole production.—To what extent would exclusive self-production by a patentee —again, one of the alternatives suggested as desirable by the Government—foster inefficiency?*[53]—Authorities have suggested that the *General Electric* rule finds a justification in the "more perfect allocation of resources [which] results as the inefficient producer is encouraged to allow efficient firms to commercialize the patent rather than to prefer self-production, even at less than optimum volume, to licensing without restrictions." Note, *Patent Price Restrictions and the Antitrust Laws: A Balance Upset,* 67 Yale L. J. 700, 712 (1958). The public may well be benefited by the making of improvements in the patented product by the second source;[54] if, as the Government contends, restriction of production under the patent to the patentee is the alternative, only one firm will be engaged in devising manufacturing techniques and improvements under the patent. The benefits to the public from a second source in this area will not be realized.—Again, the record affords no basis on which to put this factor into proper perspective.

(7) *Balanced interproduct competition and second source licensing.—To what extent is balanced competition between patented products fostered by the General Electric rule?* —An obviously important form of competition is competition between alternative patented products. The *General Electric* rule allows a small manufacturer who owns a patent to compete more effectively with a large manufacturer producing under a competing method, who may have

[53] "If the patentee is really afraid of competition he will refuse to license without protection and the patent monopoly will protect his inefficiency." Gibbons, *supra,* 51 Va. L. Rev., at 287.

[54] "Thus, there can be provided an assurance of . . . product improvement and development." Kareken, *supra,* 8 Patent, Trademark and Copyright J., at 109.

no need to license. The smaller concern may not be able to produce the desired volume of its own patented product. It appears clear that in these circumstances a second-source license of the *General Electric* type would help redress the competitive balance.—The present record provides no basis for evaluating this factor in terms of the competition between the patented lockbolts and other means of fastening or otherwise, in view of the Government's disclaimer below of any attempt to overrule the *General Electric* rule. But obviously it is an important competitive consideration.

B. The Arguments Made in Favor of Overruling *General Electric* Are Void of Factual Support on the Present Record.

The Government begins its argument that *General Electric* should be overruled with a short abstract and theoretical argument purportedly derived from the nature of the patent monopoly[55] and of the antitrust laws. (Gov't Br., pp. 19-23) We may pass this essentially theological discussion at once inasmuch as we assume that before announcing any *per se* rule putting an end to "second source" price-restrictive patent licenses, this Court will want, as it wanted in *White Motor Co.* v. *United States, supra,* to be advised as to the "economic and business stuff" from which these arrangements emerge and against the backdrop of which they must be examined.

---

[55] Even this theoretical discussion is frequently misconceived. For example, the Government essays an allegedly consequential distinction between "the patented invention or discovery, *i.e.*, the novel idea or concept" and its physical embodiment. (Gov't Br., p. 22) But the nature of the patent grant is such as to entitle the patentee to prevent the "manufacture, use or sale" of those physical embodiments, whether or not made through an actual copying of his idea or concept. The question whether the patentee has a "property right" in the items is irrelevant.

The Government then embarks on an attempt to analyze supposed economic reasons against the *General Electric* rule. (Gov't Br., pp. 23-37) As is required by the nature of the record in the case, the affirmative arguments consist of naked assertions unembarrassed by any references to record material[56]—or, for that matter, to extra-record economic material. The technique is to advance conjecture and speculation against the practice sanctioned by the *General Electric* case, while dismissing the economic arguments in favor of it as "conjectural and speculative." (See, *e.g.*, Gov't Br., pp. 27-28; 33.)

We may make a short catalogue of the principal speculative assertions which the Government makes in contending that the *General Electric* rule is unsound.

1. *Assertion*: That the patentee may, by remaining a sole manufacturer, and without licensing, reap the rewards which the patent system intends for him to have in the form of monopoly profits on his own sales. (Gov't Br., p. 24) —Not only is this not supported by the present record, but it seems to be positively contradicted by it. For, while this assertion may have some validity as to the large corporation holding patents, it seems hardly the case as to the smaller producer who cannot satisfy the demand for the patented products. The record indicates that was the case as to Huck. Such a producer may not, without a price-restrictive second source license, reap the reward of manufacturing profits which the patent system intends and which it bestows upon the larger manufacturer who owns patents. —The "model" of the Government's economic sketch here appears to be solely the large producer.

---

[56] Despite the Government's participation in a lengthy criminal trial which provides the evidentiary record for the present case on appeal, the entire argument section of its brief in this Court contains only three references to the transcript of that trial.

2. *Assertion*: That in the case of a patent which is licensed at a fixed royalty (the Government's indicated alternative to the price-restrictive licensing permitted by *General Electric*) the strength of the invention is the determinative factor as to whether the patentee may, by charging a sufficiently high royalty, remain a viable competitor with his licensee. (Gov't Br., p. 25)—This is nothing but the wildest of abstract speculation. For one thing, it assumes that all competitors are of equal economic strength, which is a common assumption among economic theoreticians but which is hardly a useful means for judging the consequences of a legal rule in the real world.

3. *Assertion*: That the reason for imposing a price restriction on the licensee, or a high royalty rate upon him, must be the patentee's "inefficiency". (Gov't Br., p. 25)—Again, there is no basis for this speculation. One obvious reason why a price restriction or high royalty has to be imposed is the fact that, by definition, the patentee has a capital investment in either the research that went into the invention embraced in the patent, or in acquiring the patent from the original patentee; and that the licensee has no such investment, and, accordingly, can undersell the patentee unless the patentee has quite a "deep pocket."

4. *Assertion*: That price-restrictive clauses will more readily be assented to by a licensee if the patent is unimportant than if it is important. (Gov't Br., p. 26)—There is absolutely no evidence of record or extra-record material to which the Government can point in support of this assertion. Since the patent must be broad enough to cover the end item sold in order to validate the price restriction (see pp. 71-72, *infra*), it seems clear that the exact opposite of what the Government asserts is true.

5. *Assertion*: That factors other than the rewards of the patent system are "compelling" factors inducing expenditures in research and development. (Gov't Br., p. 28) —While it would be foolish to deny that factors other than the patent reward contribute to investment in research and development, it is, as the Government even seems to admit, impossible to say that they are the dominant factors. The existence, since 1790, of patent legislation reflects the long-continued judgment of Congress that the patent reward does have a material effect on the stimulation of invention.

6. *Assertion*: That there is no net gain for competition from the fact that—as the Government appears to concede —the *General Electric* rule induces some patentees to grant licenses who would otherwise not do so. (Gov't Br., p. 29) —The Government dismisses any argument to the contrary as speculation.—But there is nothing speculative about the patentee's statutory power to exclude others from the practice of the invention. Certainly to the extent that any patentee chooses to grant a price-restrictive second source license, rather than to be the sole manufacturer, there is some net gain for competition, as we have developed above. (Pp. 41-45)

7. *Assertion*: That patentees who grant price-restrictive licenses would not grant licenses if they believed that the licensees would be likely to divert any substantial amount of existing or potential business. (Gov't Br., p. 33)[57]—

---

[57] The Government's argument on this point is so typical of the speculative and conjectural nature of its brief that we cannot forbear quoting it *in toto* with all the "weasel words" suitably italicized:

> "In appraising the competitive significance of a second source of supply with price restraints, it must be borne in mind that *we are assuming* the case of a patentee who would

Again, this is a completely abstract speculation, which has —like so much of the Government's theoretical presentation —a semblance of factual foundation only in the case of the large manufacturer. For a small manufacturer, like Huck, to admit a second source is to make a decision that will cost it potential business. Huck here recognized that: "The licensee's first customers would probably be our customers." (R. 504) Against this diversion of potential business there lies, for the small manufacturer, the consideration of development of the market through the participation of a second manufacturer, the rewards of the patent royalty, and the protection of the patentee's own investment in research and product development by the price-restriction provision.

8. *Assertion*: That acceptance of a price-restrictive license prevents competitors from challenging the validity of a patent, from seeking to narrow its scope, or from "inventing around it," that is, developing inventions of their own which take a different route, or which involve the development of nonpatented, noninfringing substitutes. (Gov't Br., pp. 33-35)

The difficulty here is that the adverse consequences of price-restrictive licensing suggested by this argument are primarily inherent in the situation of a patentee who has licensed a number of concerns with a price-restriction

---

deny all licenses rather than permit price competition. But such a patentee *presumably* would be equally *unlikely* to grant licenses that have price-fixing provisions if he believed that the licensees would be *likely* to divert *any substantial amount* of existing or potential business. Similarly, *it is doubtful* that a patentee would be *likely* to grant a license which would establish a competitor for the period after the patent had expired, if he thought this would create real competition. *In the rare cases* where a patent actually could provide complete domination of a market for 17 years, *it is doubtful* that the price-fixing option would induce the patentee to license." (Gov't Br., p. 33)

clause. Such an arrangement obviously may involve the consequences which the Government denounces.[58] It can involve concerted activity among several persons—the multiple licensees—who are not the beneficiaries of the patent monopoly. It can be the vehicle for the regimentation of an entire industry in a system of price control, with the patent simply used as a "cover" for these purposes.

But the situation is not the same in the case of a single "second-source" license with a price restriction. Here numerous other concerns made application to Huck for licenses and were refused. These firms—or others in the fastener manufacturing field or otherwise—could have contested the validity of the patent or its scope, devised non-patented substitutes, or sought their own patented processes. Moreover, there is evidence in the record—which was never fully developed in the light of the Government's disclaimer of any attempt to seek an overruling of *General Electric*—that there were on the market adequate substitutes for the patented lockbolts (R. 366), and that they offered price competition to lockbolts. (R. 365-66) If this case had been properly framed as a case to test *General Electric*, evidence as to these substitutes and the price and other considerations affecting their use could have been de-

[58] There is disagreement as to whether multiple licensing with a price restriction is a *per se* violation. See Note, *supra*, 67 Yale L. J., at 703-05. The potentialities of a multiple licensing system for abuse are more pronounced, leading to their condemnation in the *Line Material*, *Gypsum*, and *New Wrinkle* cases. However, the single "second source" license involved here has entirely different consequences in terms of competition from the typical form of industry-wide multiple licensing scheme found in the cases. It is the industry-wide multiple licensing system as to which it can be said: "The major objection to license price fixing is that the practice can be used as a screen to shield a mutually advantageous, voluntary renunciation of price competition by the parties." Gibbons, *Price Fixing in Patent Licenses and the Antitrust Laws*, 51 Va. L. Rev. 273, 280 (1965).

veloped, in terms of the effect on competition of the "second source" license involved here.

For the fact of the matter is—and certainly the present record offers no basis for a conclusion to the contrary—that the single "second source" patent license involved here would not stifle competition—as might a system of industry-wide price-restrictive licensing, which has been condemned. The rest of the industry was here left unlicensed and had every incentive to compete with substitute products. As was once cogently observed: "The patent system encourages invention, not only in that it rewards the inventor with a patent, but it spurs the competitors to put forth their best effort to produce a product as good, yet different from the patentee's." *James P. Marsh Corp.* v. *United States Gauge Co.*, 129 F. 2d 161, 164 (7th Cir. 1942). And it has been well said that the "courts have recognized [that] new processes and patents are perhaps the most desirable form of competition." *United States* v. *E. I. duPont de Nemours & Co.*, 118 F. Supp. 41, 214 (D. Del. 1953), *aff'd*, 351 U. S. 377 (1956).[59] Unlike the case in a scheme of industry-wide licensing—with or without price restriction—the firms which were refused licenses, and the rest of the fastener industry, had every incentive to compete here with Huck and Townsend by developing their own noninfringing substitutes or, for that matter, by challenging the patents in question.

Moreover, this was definitely not a case in which the patentee and the existing licensee actively sought to foist the license, with its price-restrictive clause, upon other firms in

[59] While the Government declined to put in proof of substitutes and competing products and objected to proof as to them, before the objection was made proof was received that at least one airframe manufacturer never used lockbolts at all. (R. 366)

order to serve as a cover for the cartelization of the entire industry. See *United States* v. *New Wrinkle, Inc.*, 342 U. S. 371, 374 (1952); *United States* v. *United States Gypsum Co.*, 340 U. S., at 83; Furth, *Price-Restrictive Patent Licenses Under the Sherman Act*, 71 Harv. L. Rev. 815, 838-39 (1958). —Here the operative restraints were those of the lawful effect of the patent grant, not those of the industry's desire to sell at fixed prices. Not only did Huck steadfastly refuse to grant licenses to others than Townsend, but it licensed Townsend only after there had been a lawsuit between them which had established the validity of the Huck patent. (GX 25, R. 501)

* * * * *

In sum, the Government is asking this Court—on the basis of a record which was not framed to present the question—to establish a flat rule that price restrictions in patent licenses, irrespective of the circumstances, are always to constitute *per se* violations of the Sherman Act.—This is to be the case, under the Government's contention, whether we are dealing with a single small inventor with a few patents or with a corporate giant whose research department controls thousands of patents; whether a package licensing or an individual licensing policy is involved; whether an industry-wide licensing system or a simple "second source" license is employed; whether, in short, such a price restriction is a tool to eliminate competition between giant industrial units and multiple, large licensees or a refuge for a small manufacturing inventor, with limited resources, desiring to create a broader manufacturing base for his product.

Two distinguished commentators, who oppose the *General Electric* rule, have written as to the justification for antitrust *per se* rules:

"The substantive justification of a per se rule must rest on the fact or assumption that the gains from forbidding the specified conduct far outweigh the losses. The magnitude of this difference, plus the administrative gains, must be enough to justify the element of arbitrariness which is always involved. This requires, first, that the harmful effects of the practice be significant; and second, either that they depend to a great enough extent on the outlawed practice so that they cannot be easily achieved in other ways, or that such ways can be anticipated and also be forestalled by per se rules. If these conditions are met, then one of three further conditions must be met. . . ." (Kaysen & Turner, *Antitrust Policy* (1959), p. 143)

Discussing these "further conditions," these commentators do not place the practice of a price restriction in patent licenses in the category of one which can be said to be "always harmful, whatever the circumstances of its use" (Condition 1), or one which is "sometimes harmful and sometimes neutral, but never contributes positively to the working of the market." (Condition 2) Rather, they clearly indicate (*id.*, at 172-73) that the practice of price restrictions in patent licenses is one which, if it is to be found a *per se* violation, must be included in the category of practices which are sometimes beneficial:

"The practice is sometimes harmful, sometimes neutral, and sometimes beneficial, but the aggregate of harm in situations in which it is harmful far outweighs the aggregate of benefit in situations in which it makes a beneficial contribution to the working of the market. Or alternatively, there are both harmful and beneficial aspects of the practice in a particular situation and these vary from situation to situation; but in the aggre-

> gate of all situations, harm far outweighs benefit. The difference between aggregate harm and aggregate benefit must be so great that the cost of distinguishing harmful and beneficial situations by an examination of the relevant circumstances is not worth incurring." (*Id.*, at 143)

In the first place, it should be observed that the decisions of this Court have never sanctioned imposing a *per se* rule under these circumstances, presumably because of the problems in making the calculus suggested by these authors. *Per se* rules have been reserved for practices which are characterized by a "lack of any redeeming virtue." *Northern Pac. R. Co.* v. *United States*, 356 U. S. 1, 5 (1958).[60] But, in any event, it is manifest that the present record does not afford this Court any basis on which to make any such judgment as to the comparative benefits and burdens to competition of the narrow practice, involving a single "second source" license with a price restriction, involved here.[61] As we have demonstrated, the record here was made on a

---

[60] "However, there are certain agreements or practices which because of their pernicious effect on competition and lack of any redeeming virtue are conclusively presumed to be unreasonable and, therefore, illegal, without elaborate inquiry as to the precise harm they have caused or the business excuse for their use." *Id.*, at 5. *Cf. White Motor Co.* v. *United States*, 372 U. S. 253, 265 (1963) (concurring opinion): those practices which in "every form" are "utterly without justification." Messrs. Kaysen and Turner admit that the practice of price restrictions in a patent license is not in this category.

[61] Of course, we do not agree with the assessment of the practice sanctioned by *General Electric* which the commentators proceed to make after setting forth this set of prerequisites for a *per se* rule. Their discussion appears to consist of speculation as abstract as that which constitutes the Government's argument here; after which they simply assert that "we would be inclined to cut the knot by overruling *General Electric*." (*Id.*, at 173) But the method to be employed is—legislation! (*Id.*, at 271) See pp. 66-67, *infra*.

basis completely foreign to such an inquiry—on issues framed by the Government's sole contention below that the conduct here had been outside of the *General Electric* rule.

It is worth observing that the single "second source" license involved here is not only at the core of what is permitted by the *General Electric* doctrine, but also appears to have the most positive benefits to the preservation of competition of any form of price-restrictive license. Indeed, a commentator opposed to the *General Electric* rule has admitted that: "If all price-restrictive licensing is not to be deemed illegal, the exception for the single-license situation presents the least danger to antitrust policy and thus possesses the best claim for recognition." Gibbons, *supra,* 51 Va. L. Rev., at 300-01. *Cf.* Diggins, *The Patent-Antitrust Problem,* 53 Mich. L. Rev. 1093, 1106 (1955).

Thus—and the present law appears to have come to this posture—it would appear an effective accommodation of the policies of the antitrust laws and of the patent laws to hold that whatever may be the case as to an industry-wide licensing system, a single "second source" license is not *per se* unlawful, but would only become unlawful upon proof of a specific anticompetitive abuse. Accordingly, the grant of a single "second source" price restrictive license would be reserved to the patentee, as one of the benefits of the statutory patent reward, as a closely circumscribed privilege. *Cf. United States* v. *Colgate & Co.,* 250 U. S. 300 (1919); *United States* v. *Parke, Davis & Co.,* 362 U. S. 29 (1960).

The absence of any form of record proof directed to the issue makes this case an inappropriate one to answer the question whether the Court should go to the extreme of outlawing even the single "second source" price restrictive license. On this basis, the Government should be held

to its repeated waiver in the court below of any challenge to the *General Electric* rule.

* * * * *

Indeed, it is a very real question whether the *General Electric* case is at this juncture a proper subject for judicial reconsideration at all. *Cf.* Furth, *supra,* 71 Harv. L. Rev., at 815. The decision is thirty-nine years old and it has been seventeen years since the United States challenged its validity in this Court.

The present balance between the antitrust laws and the patent laws represented by the *General Electric* rule, properly construed, is one which appears to have been reached in the cases decided by this Court in the late 1940's which put *General Electric* in its proper perspective. Since then, the area has been the subject of very little litigation, tending to suggest that a realistic balance has been struck. Continuation of the *General Electric* rule has been supported by the Attorney General's National Committee to Study the Antitrust Laws. (See its Report (1955), pp. 223, 235.) Congress from an early date was presented with legislation to repeal the *General Electric* rule, and declined to do so; and the subject does not even seem to be one any longer being pursued in Congress.[62]

In the light of the passage of time and the obvious complexity of the issue, together with the demonstrated astuteness of the courts in striking down schemes that go beyond the narrow patentee practice permitted by *General Electric,*

---

[62] Legislation to overrule the *General Electric* rule was introduced through the 1940's without success. See S. 270, S. 2491, S. 2730 and H. R. 7713, 77th Cong., 2d Sess. (1942); H. R. 109, H. R. 1371, and H. R. 3874, 78th Cong., 1st Sess. (1943); H. R. 97 and H. R. 3462, 79th Cong., 1st Sess. (1945); S. 2482, 79th Cong., 2d Sess. (1946); S. 72, 80th Cong., 1st Sess. (1947). See Note, *supra,* 2 Rutgers L. Rev., at 264.

it might well be most advisable to leave the question of the continued validity of that doctrine to Congress. "[T]he relevant considerations are so complex and so indeterminate . . . that legislation is the only eventual answer. . . . Is it better to permit a price-fixing clause in a patent-licensing agreement in order to encourage the licensing of other producers and ensure that effective competition will reign once the patent runs out? . . . These questions would be better handled, whether the answers depend on facts or, as seems likely, on a large measure of hunch,[63] by Congress as a part of a thoroughgoing reconsideration of patent policy in the light of antitrust considerations." Turner, *Antitrust Policy and the Cellophane Case,* 70 Harv. L. Rev. 281, 317 (1956). See also Note, *Antitrust Problems in Patent Pooling and Multiple Licensee Agreements,* 20 U. Pitt. L. Rev. 54, 61 (1958); Note, 96 U. Pa. L. Rev. 126, 128 (1947).

Interestingly enough, the Government itself indicates that many of the factors involved in the question whether the *General Electric* rule is a proper accommodation of the patent laws and the antitrust laws are matters properly for legislative rather than judicial cognizance. (Gov't Br., p. 28)—However, this leads the Government not to argue that the case should not be overruled, but to argue that it should be overruled and that the problems that would be created by such a judicial course of action be then taken in hand and dealt with by Congress. (*Ibid.*) Even as part of an argument as academic as the Government's, this suggestion seems extreme.

In any event, even assuming that judicial reconsideration of *General Electric* at this point is appropriate, any con-

[63] Of course, we do not endorse the suggestion of the author that antitrust-patent problems need or should be solved on the basis of "hunch."

sideration of overruling the case should be undertaken on a proper record, framed for that purpose, showing the economic structure of an industry, the position of the patent or patents in question in it, defining the relevant market and the competing nonpatented substitute products, and offering some basis to the Court for an informed judgment as to the practical factors involved in overruling the *General Electric* rule. The present record obviously does none of these things.

III. THE PRAGMATIC REASONS ADVANCED BY THE GOVERNMENT FOR OVERRULING *GENERAL ELECTRIC* ARE WITHOUT SUBSTANCE

The Government advances a number of pragmatic reasons, purportedly based on considerations of judicial administration, to justify the departure from thirty-nine years of precedent which overruling of the *General Electric* case would involve. (Gov't Br., pp. 38-45) The reasons given are specious, and in fact the Government's efforts only demonstrate the current lack of any practical reason for overruling *General Electric*.

1. The first reason is, as the mixed metaphor quoted by the Government has it, that the *General Electric* decision has been "whittled away by subsequent decisions to a mere shadow of its former self." [64] (Gov't Br., p. 39) But, as our

[64] The quotation is from Williams, *Conflicting Landmark Decisions on Restrictive Patent Licenses*, 10 Antitrust Bull. 295, 305 (1965). Mr. Williams is a former Government lawyer who tried the *Line Material* case; in his article he admits (quite unnecessarily because of its obvious character) to his "bias" on the question whether *General Electric* should be overruled. *Id.*, at 295. However, even Mr. Williams is unable to look on the question whether *General Electric* should be overruled as a live one in present day antitrust enforcement. As he observes with obvious nostalgia: "Patents and antitrust law was a popular subject on Bar Association programs during the late 1940's but merger pushed it into the background during the '50's." *Id.*, at 295.

review of the strict enforcement of the limitations on *General Electric* demonstrates, all that has happened is that the courts have been quick to strike down departures from the narrow privilege afforded by the case. To be sure, *General Electric* is of "no practical use" (Gov't Br., p. 39) to the patentee who wishes to organize an industry-wide price-fixing scheme, to participate in a patent pool, to engage in cross-licensing with other patentees, to engage in resale price maintenance, or to impose price restrictions beyond the scope of his patent. In short, the doctrine may be of little practical use to the large producer who has no commercial need to see a "second source" established. Perhaps this is what caused the General Electric Company's own counsel to state that the net effect of the decisions putting the *General Electric* case in proper perspective was "to limit the commercial utility of price restrictions." Wood & Johnson, *Patents and the Antitrust Laws,* 1950 Univ. of Ill. L. Forum 544, 564; Gov't Br., p. 40. See *United States* v. *General Electric Co.,* 82 F. Supp. 753, 905-06 (D. N. J. 1949).

But while attempts to apply the *General Electric* doctrine beyond the facts presented by that case are no longer countenanced and hence the doctrine may be of limited utility to the plans of giant corporations, it is of obvious importance, within its limited scope, to the small inventor and the small business concern.[65] If the record in this case—

[65] There have been a number of cases subsequent to *Line Material* in the lower courts upholding, in private litigation, patent license agreements with price-restrictive features. See, *e.g., Prestole Corp.* v. *Tinnerman Products, Inc.,* 271 F. 2d 146, 156-57 (6th Cir. 1959); *Glen Raven Knitting Mills, Inc.* v. *Sanson Hosiery Mills, Inc.,* 189 F. 2d 845, 853-54 (4th Cir. 1951); *Ronson Patents Corp.* v. *Sparklets Devices, Inc.,* 112 F. Supp. 676, 685-86 (E. D. Mo. 1953). The existence of cases like the foregoing—each of which involves a single price-restrictive license by an apparently small concern—indicates

which was not framed with a view toward the reexamination of *General Electric*—teaches anything, it teaches that. For here the record is plain that the *General Electric* doctrine permitted a small business concern, a family business founded by an inventor, Louis Huck, to provide the "second source" which its customers were demanding, without sacrificing the benefits of or abandoning the fruits of manufacture under two strong basic patents.

2. The Government also suggests that there is continuing uncertainty as to the proper application of the *General Electric* doctrine. To alleviate this condition, the Government suggests radical surgery; the overruling of the doctrine. It might be advisable to see whether the patient is actually ill before proceeding with the operation.

In point of fact, *General Electric's* scope is by now quite well settled. Even the Government brief's citation practice, which omits reference to the dates of the allegedly controversial cases which it cites, cannot mask that.

a. The Government cites the question as to whether after the *Line Material* and *Gypsum* cases, a multiple licensing scheme with a price-restrictive clause is a *per se* violation of the Sherman Act, or subject only to the rule of reason. (Gov't Br., pp. 40-41) The only decision examining the point in the last ten years concluded that such a scheme was a *per se* violation. *Newburgh Moire Co.* v. *Superior Moire Co.*, 237 F. 2d 283 (3d Cir. 1956). In fact, no reported case since the *Line Material* decision has sanc-

---

that the *General Electric* doctrine is still the subject of practical reliance by businessmen, and that price-restrictive licenses are, as the District Court observed in *Prestole*, "not uncommon." 271 F. 2d, at 157.

tioned such an arrangement.[66] This issue is the only shadow of controversy left in the *General Electric* area, and, in view of the infrequency of litigation and the apparent reluctance of the courts to uphold any specific challenged price-restrictive multiple licensing scheme, it appears to be primarily of academic interest.

b. The only other allegedly controversial areas of application of *General Electric* which the Government has been able to unearth are two issues as to what the relationship between the patent and the article sold must be in order to justify a price restriction by the patentee. (Gov't Br., pp. 41-42)

The first "controversial" issue is whether a licensor of a process patent may control the price of the unpatented end item produced under the process by the licensee. Here a conflict of circuits is claimed to exist. (Gov't Br., pp. 41-42)—What is meant by this is that a panel of the Second Circuit, consisting of Judges Chase, Manton and A. N. Hand, in 1936 held that a price restriction was permissible under these circumstances. *Straight Side Basket Corp.* v. *Webster Basket Co.*, 82 F. 2d 245 (2d Cir. 1936). The other half of this supposedly live conflict of circuits consists of the fact that the Courts of Appeals that have passed on the question after the antitrust climate changed in the late 1930's have rejected the *Straight Side* case and held the practice to be beyond the rule of the *General Electric* case and violative of the Sherman Act. See *Barber-Colman Co.* v. *National Tool Co.*, 136 F. 2d 339 (6th Cir. 1943); *Cummer-Graham Co.* v.

[66] The only contrary authority in the lower courts cited by the Government is a dictum in a Fourth Circuit case decided in 1950 relating to certain practices which antedated *Line Material*. See *Westinghouse Electric Co.* v. *Bulldog Electric Products Co.*, 179 F. 2d 139, 143 (4th Cir. 1950). See n. 58 p. 60, *supra*.

Straight Side Basket Corp., 142 F. 2d 646 (5th Cir. 1944). In the latter case, this Court denied certiorari despite the alleged conflict, although the Government's brief does not seem to include the citation. 323 U. S. 726 (1944). In fact, despite the 1936 Second Circuit decision, it was said by Judge Learned Hand, after the Fifth and Sixth Circuit decisions, that the question was "in flux" in his Circuit. *United States* v. *Aluminum Co. of America*, 148 F. 2d 416, 438 (2d Cir. 1945).

Thus, there is no real controversy and the law has been definitely settled in favor of a strict interpretation of the privilege granted by the *General Electric* case.

The second issue involves the question whether a patent on a device justifies a price restriction on the sale of the end-item in which the device is a component. Here, the Government has been able to find a 1940 District Court case holding that it does. *General Electric Co.* v. *Willey's Carbide Tool Co.*, 33 F. Supp. 969 (E. D. Mich. 1940). All the later cases take the contrary view. *United States* v. *General Electric Co.*, 80 F. Supp. 989, 1004-05 (S. D. N. Y. 1948); *United States* v. *General Electric Co.*, 82 F. Supp. 753, 813 (D. N. J. 1949). Apparently no patentee has risked litigating the issue since 1949 and here, once again, the law can be regarded as definitely settled in favor of the more restrictive view of the privilege.

3. As a last effort, in order to put a patch over the undeniable fact that, despite the Expediting Act providing for direct appeals to this Court, and despite the allegedly pernicious effect of the *General Electric* doctrine, no case involving any substantial question of law relating to it has come before the Court in the last fifteen years, the Government has rummaged among the cases in the "blue book" of unadjudicated antitrust complaints and consent

decrees to try to find some indication that the *General Electric* rule is causing prejudice to the public by requiring the Government to bring a multiplicity of suits to curb abuses of it. (Gov't Br., pp. 42-45) This effort reveals that, apart from this case, a grand total of three actions have been filed by the Government in the last ten years involving alleged abuses of the *General Electric* rule.[67] On this

[67] See the list in Gov't Br., pp. 44-45 n. 25. The only actions listed which were commenced in 1955 or later were *United States* v. *Robertshaw-Fulton Controls Co.* (Civ. 14745, W. D. Pa. 1956); *United States* v. *Driver-Harris Co.* (Civ. 942-56, D. N. J. 1956); and *United States* v. *Minnesota Mining & Mfg. Co.* (Crim. 61-73-D, E. D. Ill. 1961). In all three cases the price-restrictive licensing charged was either only a minor element of an extensive conspiracy or monopolization or was a part of conduct clearly unlawful under the decisions putting *General Electric* in perspective. In *Robertshaw-Fulton*, the basic offense charged was a patent pool between two patent-owning defendants controlling between them 96 per cent of the market, together with agreements among the separate patentees restricting the licensing of individual patents. Other violations of the Act, including acquisition of competitors and patent cross-licensing, were charged. In *Driver-Harris*, an industry-wide multiple licensing scheme was apparently involved, including the setting of production and sales quotas among the conspirators. The *Minnesota Mining* indictment charged the forcing of price-restrictive multiple licenses on the rest of the industry through a coercive scheme.

The relevant footnote in the Government's brief identifies a total of five cases filed earlier, that is, between the decision in *Line Material* in 1948, and 1955. All of these earlier cases again involved conspiratorial or monopolistic behavior in which price-restrictive licensing was only a minor element. Of these, *United States* v. *Krasnov*, 143 F. Supp. 184 (E. D. Pa. 1956), *aff'd*, 355 U. S. 5 (1957) (filed 1950) was the only litigated case and is discussed in note 70, *infra*. *United States* v. *Austenal Laboratories, Inc.* (Civ. 50-496, S. D. N. Y. 1949), was apparently a classic industry-wide multiple licensing scheme compounded by division of markets and tie-in sales by the patentee. *United States* v. *Scott & Williams, Inc.* (Civ. 54-358, S. D. N. Y. 1949), charged a conspiracy between the dominant hosiery machinery manufacturer in this country and its counterpart in Great Britain, under which the American defendant was charged to have acquired patents with an intent to monopolize, to have tied the licensing of its patents to the purchase of unpatented machinery, and to have resorted, in classic monopolist's fashion, to curbs on secondhand sales of its machinery and refusals to repair machinery where the users had added parts

basis, it is possible to infer a certain amount of overstatement in the Government's suggestion that the absence of a *per se* rule in this area is causing the public to pay "a heavy toll" until actions can be brought to curb specific abuses under the doctrine.

In fact, this dearth of litigation strongly suggests that the *General Electric* privilege is no longer abused to any extent by the dominant firms against whom antitrust proceedings justifiable in economic terms might be brought by the Government. This circumstance is strongly suggestive of the fact that the *General Electric* privilege is now availed of primarily in situations like the one in the case at bar: single, "second-source" licenses granted by small manufacturing patent owners who desire to establish a broader base of manufacture, without destroying the rewards which the patent gives them, and without abandoning manufacture themselves.

One final point, as to whether there is any pressing need for an overruling of a case which has stood for thirty-nine years as a source of a limited privilege to the small manufacturing inventor desiring to establish a second source,

---

made by its competitors. *Cf. United States* v. *United Shoe Machinery Corp.*, 110 F. Supp. 295, 325 (D. Mass. 1953), *aff'd*, 347 U. S. 521 (1954). *United States* v. *Michigan Tool Co.* (Crim. 33671 and Civ. 12605, E. D. Mich. 1953), primarily involved a variety of similar anticompetitive practices in the gear-cutting machinery industry, together with cross-licensing of patents. *United States* v. *Minnesota Mining & Mfg. Co.* (Civ. 8-119, D. Mass. 1949), primarily involved an export pool together with a patent pool involving patents owned by a number of separate patentees.

The conduct charged in these complaints and indictments was so aggravated, and the relevance of the patent license price-fixing to it so incidental, that it is hard to imagine that the defendants would have been in any material fashion inhibited by a *per se* rule on price restrictions in patent licenses. It is, of course, not irrelevant that all these cases which have been concluded, were carried to a successful conclusion by the Government.

is suggested by the record of this case. It is puzzling why, if what was badly needed in this area of the law was a complete extirpation of the *General Electric* doctrine, this need did not dawn upon the Department of Justice in the present case until the time came for filing its notice of appeal. The repeated affirmations by the Government that it was not seeking an overruling of the *General Electric* case—and its declaration that it was "good law" (R. 729)—do not appear entirely consistent with its current position that the doctrine is so productive of evil results as to warrant overruling a unanimous decision of this Court, rendered thirty-nine years ago, in a case where the record is not framed to present the issue and where every procedural consideration looks the other way.

All these factors unite to suggest that a wholly academic issue, unrelated to the needs of modern antitrust enforcement, is being foisted upon this Court in the present case.

IV. THE ARRANGEMENTS SHOWN OR SUGGESTED BY THE PRESENT RECORD ARE PERMITTED BY THE *GENERAL ELECTRIC* RULE

The only respect in which the Government contends in this Court that the conduct of appellees went beyond that permitted by the *General Electric* case lies in the allegedly exclusive feature of the license.[46]—As to this point again, we will argue the legal questions as if the alleged oral agreement testified to by Looker had been shown to be a fact, although neither of the District Judges accepted his testimony except for the purposes of passing on the ques-

[46] In the *General Electric* case, while the license to Westinghouse was the only license containing a price restriction, it appears that other licenses had been granted without a price restriction clause. 272 U. S., at 481.

tions of law.—While the written license agreement, of course, contains an exclusivity feature, that feature terminated in September, 1956, and the license has thereafter been nonexclusive. Although Huck refused licenses to others after 1956, the District Court found that Townsend had not participated in Huck's refusals. (Fdg. 22, R. 712-13)

1. In the first place, even assuming the truth of Looker's story, the Government's argument is based on a complete misconception of the record. The Government argues that the agreement of the parties went beyond the *General Electric* rule "since Townsend undertook to follow Huck's prices not in return for the right to use Huck's patents *(which it would continue to have whether or not it followed such prices)*, but to assure that Huck would not license anyone else." (Gov't Br., p. 50, emphasis supplied)

This factual recital by the Government would have been correct if Looker had testified that, subsequent to the execution of the written agreement, the parties had orally agreed to an extension of the two-year exclusiveness and price-restriction features in the patent license—which as a license ran for the full life of the patents. If that had been the time sequence, the Government could well have said that Townsend would have continued to have the right, under the license, to use Huck's patents whether or not it followed its prices; and from this it might be argued that the price restriction was not intrinsic to the patent license, though even then the legal consequences are far from clear.

But that was not the arrangement to which Looker testified. His testimony was that the parties entered into the oral agreement some time before the execution of the written license. Thus, at the time the alleged oral agreement was entered into, there was no license between the parties.

As Looker testified to them, the facts were that the parties agreed that while the written license would specify September 1956 as the termination date for these two features, the actual agreement was that they would continue until the patents expired in November 1967. This means that the alleged provision of the exclusive and price-restrictive features for the life of the patents was an integral part of the licensing agreement, similar in effect to the written two-year provision for those features. Certainly the Government would not argue that, under the written two-year provision in the license, Townsend could ignore the prices set by Huck and at the same time continue to enjoy the benefits of Huck's patents.

Thus the entire factual premise of the Government's argument simply does not exist on the record. Even if Looker's testimony is credited, all that is involved is an exclusive license with a price-restriction feature for the life of the patents in question.

2. The inclusion of the exclusivity feature in the price-restrictive patent license, once *General Electric* is assumed to be good law, clearly does not constitute a violation of the Sherman Act on this record. The right to exclude others from making, using, or selling the invention described in the claims of the patent is the precise nature of the patent grant. 35 U. S. C. §154. Exclusive licenses are old and common in the patent field[69] and, of course, neither this Court nor any other federal court has ever held that they violate the Sherman Act. The Government's suggestion that even without a price restriction an exclusive patent license is a *per se* violation of the Sherman

[69] See, *e.g.*, *Bauer* v. *O'Donnell*, 229 U. S. 1 (1913); *Bement* v. *National Harrow Co.*, 186 U. S. 70 (1902); *Hayward* v. *Andrews*, 106 U. S. 673 (1882); *Brownell* v. *Ketcham Wire & Mfg. Co.*, 211 F. 2d 121 (9th Cir. 1954); *Becton, Dickinson & Co.* v. *Ersel & Co.*, 86 F. 2d 267 (6th Cir. 1936).

Act appears the product of overexuberance.[70] See *Standard Oil Co.* v. *United States,* 283 U. S. 163, 179 (1931); *United States* v. *E. I. du Pont de Nemours & Co.,* 118 F. Supp. 41, 224 (D. Del. 1953), *aff'd,* 351 U. S. 377 (1956). *Cf. Ethyl Gasoline Corp.* v. *United States,* 309 U. S. 436, 456 (1940).

Moreover, assuming *General Electric* to be "good law," it is impossible to see how the inclusion of an exclusive feature in a single price-restrictive license amounts to a *per se* violation of the Sherman Act. None of the commentators who have argued against the *General Electric* rule have suggested that the rule has what they consider special adverse effects where an exclusive license is concerned. On the contrary, as we have developed, it is in

[70] Thus the Government contends that: "Any agreement whereby the patentee surrenders his freedom to license others is of doubtful validity even when price fixing is not involved," and ". . . competitors may not share the power to exclude which the patent laws give only to the owner of a patent." (Gov't Br., pp. 50-51). The only inference we can draw from this language is that exclusive patent licenses are supposed to be *per se* unlawful; under them, the patentee does surrender his freedom to license others, and, by granting or withholding a waiver, the licensee (typically a competitor) may come to share in the patentee's "power to exclude." However, not only have repeated decisions of the courts sanctioned these arrangements, but the cases cited by the Government do not, of course, even remotely support its assertion. Two of the cases involved were "cross-licensing" conspiracies, condemned as such, *United States* v. *Line Material Co.,* 333 U. S. 287 (1948); *United States* v. *Besser Mfg. Co.,* 96 F. Supp. 304 (E. D. Mich. 1951), *aff'd,* 343 U. S. 444 (1952); one involved a conspiracy among two patentees whereby one agreed to suppress the practice of his patent, *Blount Mfg. Co.* v. *Yale & Towne Mfg. Co.,* 166 Fed. 555 (D. Mass. 1909); one involved an exclusive license (which the licensor was in no position to grant), used as part of a bizarre conspiracy involving vertical price-fixing, the use of obviously invalid patents, fraudulent infringement suits, and sham settlements, *United States* v. *Krasnov,* 143 F. Supp. 184 (E. D. Pa. 1956), *aff'd,* 355 U. S. 5 (1957); and the remaining three cases do not involve patents at all. *United States* v. *Terminal Railroad Ass'n,* 224 U. S. 383 (1912); *Associated Press* v. *United States,* 326 U. S. 1 (1945); *Klor's, Inc.* v. *Broadway-Hale Stores, Inc.,* 359 U. S. 207 (1959).

the situation where a multiple licensing scheme is in effect that a price restriction clause can take on unlawful aspects, not where a simple "second-source" license, exclusive or nonexclusive, is involved. Viewed that way, the exclusivity feature gives the price-restricted licensee an assurance that he will not become a party to an unlawful multiple licensing combination. Thus, there certainly appears to be no policy reason for treating an exclusive "second-source" license with a price restriction any differently from a single nonexclusive license of that nature.

The appellees here were each small producers—their combined annual sales of the product in question were only about $6 million—of a product for which there were adequate substitutes in the relevant product market. Accordingly, the record does not present the question whether an exclusive license with a price-restrictive clause might, under circumstances of the domination of the relevant product market by the patentee and the licensee, become a violation of the Sherman Act. *Cf. Associated Press* v. *United States,* 326 U. S. 1, 13, 17-18 (1945). As noted, the Government introduced no proof whatsoever as to the relevant market for fastening devices and the position of Huck and Townsend in it, and objected to the introduction of proof as to substitutes for the patented devices. (R. 366) Its position at trial was that it did not have to concern itself with competition in any area broader than that encompassed by the patent claims. Even here, in fact, the record shows that in fact Huck issued two licenses under its patents to make titanium lockbolts. (Fdg. 22, R. 712) While Huck and Townsend did not fabricate lockbolts from this metal, it certainly is not at variance with the record to assume that titanium lockbolts—with their obvious application in the aircraft industry—offered competition to other lockbolts. Thus in terms of a product market, not only were Huck and Townsend not shown to have exclusive

control, but the license itself was not even shown to be exclusive.

3. There is some suggestion by the Government that the exclusive arrangement here involved a practical delegation to Townsend of Huck's powers to grant or refuse licenses. The Government states: "For whenever Huck might otherwise be inclined to grant a license, it would inevitably be most reluctant to do so over Townsend's objection, and thus run the risk of price-cutting by the latter. At the same time Huck naturally would seek Townsend's agreement to the issuance of a new license that might be advantageous to Townsend." (Gov't Br., p. 50)

These assertions rest on pure fantasy. There is nothing in the record that indicates that Townsend was ever consulted at all in connection with Huck's decisions as to the grant of additional licenses. In a finding not controverted here by the Government, the District Court found that Huck's licensing decisions "are not shown to have been participated in by or known to defendant Townsend Company, or to have occurred otherwise than by Huck, in the exercise of its own judgment and right to select or reject prospective licensees and to prefer one over others for considerations within its discretion." (Fdg. 22, R. 712-13) —Indeed, as the District Court found, all the proofs indicate that Huck's policy with respect to licensing was dictated by purely business considerations in the interests of the exploitation of its patents. Thus, putting to one side the question whether active participation by an exclusive licensee in granting or denying waivers of the exclusive feature of his license could ever amount to a violation of Section 1 of the Sherman Act, it is manifest that no such situation was presented here.

* * * *

Finally, it must be remarked that the question whether exclusive licenses with price-restriction clauses should be held to be *per se* violations of the Sherman Act, involves many of the same problems, in terms of the content of the present record, presented by the Government's broader contention that *General Electric* should be overruled. There is no real basis in the record on which the Court can arrive at an informed judgment on the matter. The Government has demonstrated neither the justification nor the need for erecting a *per se* rule against the addition of an exclusivity feature to the single "second-source" price restrictive license sanctioned by *General Electric*. The conclusion seems plain that its contention is really a subsidiary of its central point that *General Electric* should be overruled and must stand or fall with it.

CONCLUSION

This case furnishes no basis on which the Government should be relieved from its waiver of any intent to question the *General Electric* rule; and the record provides no occasion for any reexamination, or for that matter, any extended discussion, of that rule by the Court. Moreover, the other question presented by the Government is not legally distinguishable from the question whether *General Electric* should be overruled.

Accordingly, the judgment of the District Court should be affirmed on the grounds stated in that court's opinion.

Respectfully submitted,

PAUL A. PORTER
DENNIS G. LYONS
1229 Nineteenth Street, N.W.
Washington, D. C. 20036

JOHN A. BLAIR
J. KING HARNESS
JOHN C. STERRITT
700 Fisher Building
Detroit, Michigan 48202

ALBERT M. STERN
2388 First National Building
Detroit, Michigan 48226

Attorneys for Appellee
Huck Manufacturing Company

THOMAS W. POMEROY, JR.
S. K. McCUNE
W. WALTER BRAHAM, JR.
1100 Oliver Building
Pittsburgh, Pennsylvania 15222

Attorneys for Appellee
Townsend Company

Of Counsel:

ARNOLD, FORTAS & PORTER
Washington, D. C.

HARNESS, DICKEY & PIERCE
Detroit, Michigan

STERN and ROSSIER
Detroit, Michigan

KIRKPATRICK, POMEROY, LOCKHART & JOHNSON
Pittsburgh, Pennsylvania

September, 1965.

SUPREME COURT OF THE UNITED STATES

No. 8.—October Term, 1965.

United States, Appellant, *v.* Huck Manufacturing Co. et al.	On Appeal From the United States District Court for the Eastern District of Michigan.

[December 6, 1965.]

Per Curiam.

Judgment affirmed by an equally divided Court.

Mr. Justice Fortas took no part in the consideration or decision of this case.